HOSPITAL 20

brenner metal products corp.

16 main avenue wallington, new jersey 07057 (201) 778-2466
telex 133511

MAINTENANCE & OPERATING INSTRUCTIONAL MANUAL

Illuminator, X-Ray Film Fluorescent

NSN 6525-01-230-0603

Contract No. DLA120-86-C-8021
DLA120-87-C-8501

NSN 6525-01-147-0603
ILLUMINATOR, X-RAY FILM FLUORESCENT

1. SCOPE

This Maintenance and Operating Manual is for an Illuminator used in the viewing of medical x-ray film of all sizes up to and including 14 x 17 inch sheets.

2. GENERAL

This Illuminator is capable of being attached to a wall, free standing (desk mounted) or connected together to form a multiple section illuminator up to a maximum of six modules. Storage indoors is recommended with no concern to the high/low temperature range.

The dimensions of the Illuminator are 15-1/2" x 18-1/2" x 5" with a cube of 1.2' and the weight is 16 lbs.

3. UNPACKING

(a) Examine package for signs of damage or rough handling.
(b) Unpack carefully making sure to remove the multiplex plate before discarding container.
(c) Examine for internal damage.
(d) If Illuminator is damaged, submit appropriate reports.

4. INSTALLATION

(a) If is desired to connect units together remove two rubber pads from the bottom adjacent to the buttings sides of each of the two units to be connected. Use the connecting plate to lock the two units together by re-installing the rubber pads.
(b) Insert the line cord plug into a 110/230 AC outlets.

5. POWER SUPPLY

110/230 Volt AC 50/60 HZ

5. OPERATING INSTRUCTIONS

After the unit is energized by the appropriate power source turn toggle switch on. Film is then inserted into the continuous ball type film holder. THIRD WIRE GROUND MUST NOT BE BYPASSED. UNIT MAY NOT OPERATE IF BYPASSED.

7. MAINTENANCE

When necessary the illuminator can be cleaned using any mild household detergent. If bulbs burn out replace with the same type as the original. To replace bulbs, remove three screws fastening film holder, then remove screen.

8. IF UNIT FAILS TO OPERATE PROPERLY

(a) Check to see if unit is properly plugged into ground receptacle.
(b) check to see if fluorescent tubes are properly seated in sockets.

PARTS LIST

BRENNER P/N & KEY	DESCRIPTION	P/N	VENDOR NAME	NSN	SOURCE	QUANTITY
FI-0212-1	HOUSING		BRENNER			1
FI-0212-2	FILM HOLDER		BRENNER			1
FI-0212-5	REFLECTOR ASSEMBLY		BRENNER			1
FI-0212-6	VIEWING SCREEN		ROHM & HASS	9330-00-282-8330	DPSC	1
FI-0212-7	LINE CORD 3/18 SJT	K5147	ITT	5995-00-045-5013	DGSC	1
FI-0212-8	BALLAST	447CTCP	UNIVERSAL	6250-00-838-7916	DGSC	2
FI-0212-9	SOCKET	590 W	KULKA			8
FI-0212-10	FLUORESCENT TUBE (NOT FURNISHED)	F-15T12	GE	6240-00-950-8123	DGSC	4
FI-0212-11	SWITCH	720T	LEVITON	5930-00-950-8123	DESC	1
FI-0212-12	AUTOFORMER		BRENNER			1
FI-0212-13	PLATE, MULTIPLEX		BRENNER			1

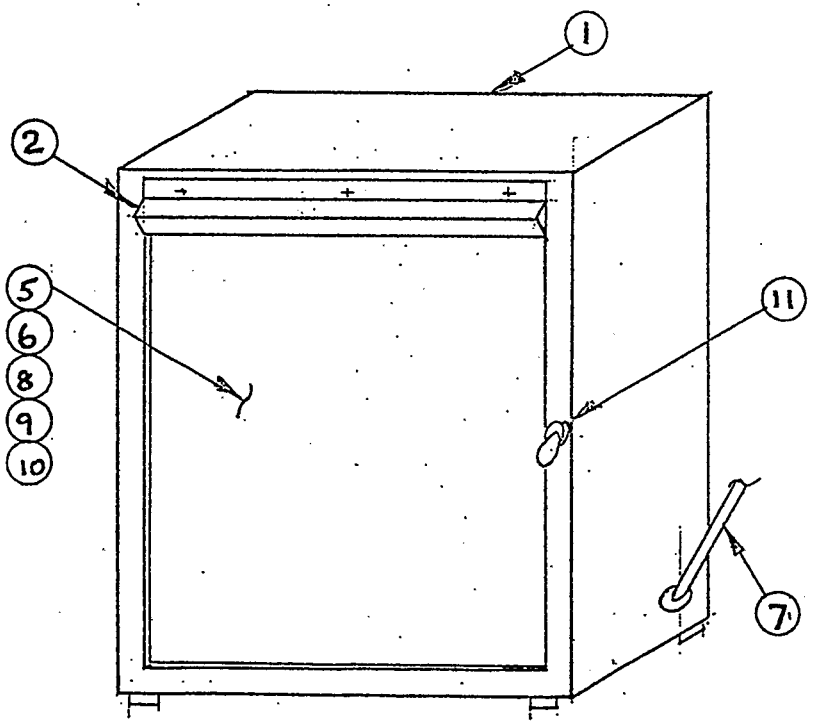
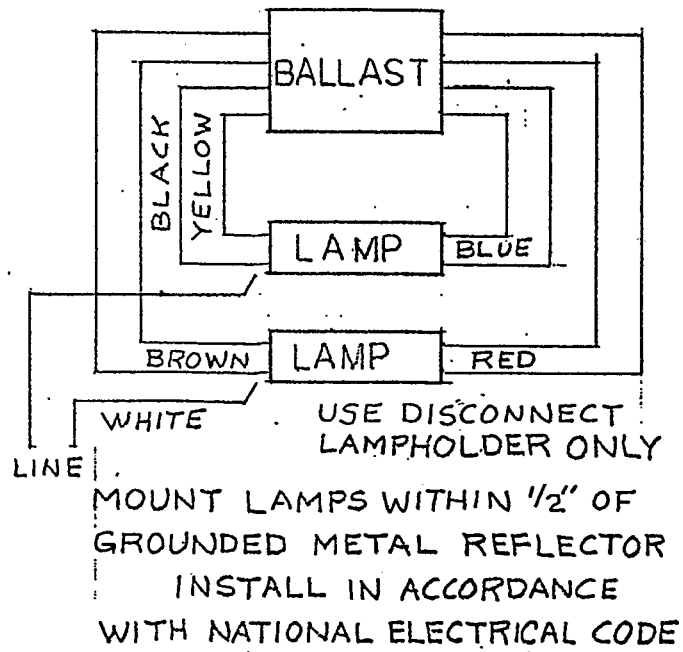
GROUND BALLAST CASE