6545-01-117-3894

TECHNICAL MANUAL

INSTRUCTIONS AND PARTS BREAKDOWN

SINK UNIT, SUR[illegible]AL SCRUB AND UTENSIL, HOSPITAL, FIELD, HOT AND COLD WATER SUPPLY, ONE SINK, ELECTRICALLY HEATED, 115 VOLT, 60 HZ AC

MODEL NUMBER 1001A1-M
NSN 6545-01-117-3894
CONTRACT NO. DLA 1[illegible]0-84-C-4350

ATLANTIC INDUSTRIES, INC.
3 CARDINAL COURT
HILTON HEAD, SOUTH CAROLINA 29928
(803) 681-6306

REV A
27 SEPT 84

SAFETY PRECAUTIONS

BEFORE OPERATION

Do not attempt operation of the sink unit without an adequate water supply.

Connect the ground clamp securely to a suitable ground.

DURING OPERATION

The sink unit contains dangerous voltages which can cause severe electrical shock or death. Be extremely careful when making voltage measurements or other checks with the sink unit connected to the power source during troubleshooting.

Always remove the power plug before making any continuity tests.

TABLE OF CONTENTS

Section

I. INTRODUCTION
1-1 Purpose and Function....1-1
1-3 Description....1-1
1-5 Specifications....1-1
1-7 Components Description....1-1
1-9 Base Section....1-2
1-10 Sink Section....1-2
1-11 Power Unit....1-2
1-12 List of Items Furnished....1-2
1-14 Leading Particulars....1-2

II. ASSEMBLY
2-1 General....2-1
2-3 Mechanical Assembly....2-1
2-4 Electrical Installation....2-3
2-6 Ground Connection....2-3
2-7 Electrical Connection....2-3
2-8 Pump Operational Check....2-3
2-9 Heater Operational Check....2-4
2-10 Detergent Dispenser....2-4

III. OPERATION
3-1 Operation....3-1
3-2 Pump and Heater....3-1
3-3 Gravity Operation, No Power....3-1
3-4 Gravity Operation, Power Available....3-5
3-5 Electrical Description....3-5
3-6 Wiring....3-5
3-7 Internal Wiring....3-5
3-8 External Wiring....3-6
3-9 Troubleshooting Guide....3-6

IV. PARTS LIST
4-1 General....4-1
4-2 Explanation....4-1
4-3 Key Number....4-1
4-4 Part Number....4-1
4-5 National Stock Number....4-1
4-6 Nomenclature....4-1
4-7 Quantity....4-1
4-8 List of Unillustrated Parts....4-13

LIST OF ILLUSTRATIONS

Figure No.		Page No.
1-1.	Removal of Reservoir Plug	1-3
2-1.	Packaged Unit, Chest Base Removed	2-2
2-2.	Packaged Unit, Sink Removed	2-2
2-3.	Placement of Components in Stand	2-2
2-4.	Sink Attachment to Stand	2-2
2-5.	Assembly of Sink Basin and Stand	2-2
2-6.	Sink Unit - Pump Operation	2-2
3-1.	Pump Operation Flow	3-2
3-2.	Gravity Operation	3-3
3-3.	Gravity Feed Flow	3-4
3-4.	Wiring Diagram, Internal	3-5
3-5.	Wiring Diagram, External	3-6
4-1.	Sink Unit (Front View)	4-3
4-2.	Sink Unit (Rear View)	4-5
4-3/4-4.	Sink Unit - Power Unit Assembly	4-7
4-5.	Sink Unit (Miscellaneous Views)	4-9
4-6.	Pump Assembly and Repair Kits	4-10
4-7.	Detergent Dispenser	4-11
4-8.	Repack - Positioning of Fan Clips	4-14

SECTION I

INTRODUCTION

1-2. PURPOSE AND FUNCTION.

1-2. This manual contains General Operating instructions and an illustrated parts breakdown for a field hospital surgical scrub and utensil sink unit and cold water supply; one sink, electrically heated 115 volt, 60 HZ AC. The manual is divided into four sections consisting of Section I, Introduction, Section II, Assembly, Section III, Operation and Maintenance Trouble Shooting, Section IV, Parts List.

1-3. DESCRIPTION.

1-4. The sink unit consists of one collapsible, portable scrub sink, capable of delivering either electrically heated, or unheated water as desired. This sink unit is intended for the use of medical personnel in the field during pre-operative and post-operative scrub and for the cleaning of instruments as required.

1-5. SPECIFICATIONS.

1-6. Refer to Table I for sink unit specifications.

TABLE I. SPECIFICATIONS

General			
Line Voltage (AC)			115 V, 60 HZ
Flow, Start Delay			Continuous flow within one 30 seconds of activating pump
Spare Fuses			Fuse, two provided
Spare Washers			Washers, six provided
HEATER PERFORMANCE (PUMP)			
Knee Lever Position	Flow Rate	(Qt/Min)	Temperature (^{o}F)
Left (activiate)	1.8	+/- 0.1	95° $+5^{o}$ -2°
Middle	1.2	+/- 0.1	105° $+/-3^{o}$
Right	0.8	+/- 0.1	120° $+2^{o}$ -5°
Ambient Water			70° $+0^{o}$ -2°
HEATER PERFORMANCE (GRAVITY)			
Flow Rate (Qt/Min)	1.5	+/- 0.1	98° $+/-3^{o}$
	2.2	+/- 0.1	89° $+/-3^{o}$

1-7. COMPONENT DESCRIPTION

1-8. The sink unit consists of three major sections, as outlined in the following paragraphs.

1-9. BASE SECTION. The parts in the base section (Item 13, Figure 4-2) serve dual purpose. The pieces provide a carrying case for all of the other components when the unit is transported or stored. When the sink is assembled for use, these parts provide a base and reservoir for the unit. A grounding strap and clamp, the knee-controlled valve and related hoses and fittings are located in the base section.

1-10. SINK SECTION. The parts in the sink section (Figure 4-2) are the sink, a detergent dispenser (Figure 4-7) and a faucet, including the necessary hoses and fittings.

1-11. POWER UNIT. The Power Unit (Figure 4-3) is connected through wiring and hoses to the sink and base sections. It is supported by extension rods. Located externally on the Power Unit are an indicator light, heat and pump controls, a fuseholder, a selector valve handle, a demountable fan, and fittings for various connecting lines. Located within the Power Unit are a water mode selector valve, terminal block, water heater, water pump and the necessary interconnecting plumbing fittings.

1-12. LIST OF ITEMS FURNISHED.

1-13. The following is a list of spare parts furnished with the unit.

TABLE II. SPARE PARTS

NOMENCLATURE	PART NO.	SIZE	QUANTITY	LOCATION
Washer		3/4	6	Wire in frame and base opening for sink drain hose.
Fuse	ABC 20		2	Inside power unit in spare fuseholder which is located directly above regular fuseholder.

1-14. LEADING PARTICULARS.

1-15. Refer to Table III for leading particulars.

TABLE III. LEADING PARTICULARS

Reservoir Position for Gravity-Feed Operation	Minimum 3 Ft. above faucet
Flow Rate (gravity-feed operation)	1.4 to 2.3 QT/MIN
Temperature Range (gravity-feed operation)	86° to 101°F
Flow Rate (pump operation)	0.7 to 1.9 QT/MIN
Temperature Range based on 70°F. Inlet Water (pump operation - as controlled by knee valve operation)	Preferred 110°F

TABLE III. LEADING PARTICULARS (CONT)

No. 3 Field Medical Instrument and Supply Set Chest Dimensions

Length	30 IN
Width	18 IN
Depth	10 IN

Field Hospital Surgical Scrub and Utensil Sink Unit Dimensions

Length	43.50 IN
Width	27.00 IN
Height	63.00 IN
Weight	73 LB.(MAX)

Power Supply . . . . . 115 volt, 60 HZ, AC, 20 Amperes(MAX)

* *

SPECIAL NOTES

RESERVOIR ACCESS PLUG - P/N SS-092, Page 4-6, Figure 4-2, Key 4-2-1

If plug is not easily removable by hand, it is recommended that one of the following methods be used as illustrated below:

Using an 8 in adjustable wrench

Using a plug wrench designed for the "Tri_Sure" Plug
NSN 5120-00-185-6749 GSA
American Flange P/N 83206

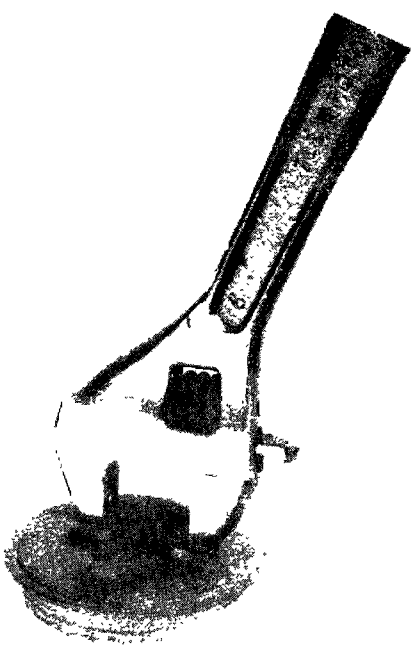

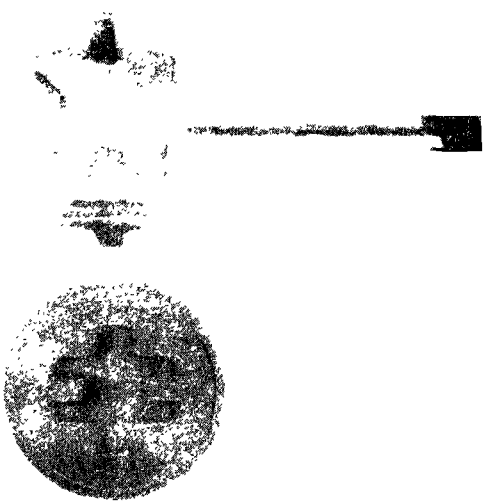

Figure 1-1, Removal of Reservoir Plug

SECTION II

ASSEMBLY

2-1. GENERAL. The following instructions cover the preparation for use of the sink unit.

2-2. The sink unit is packed in a disassembled form within a modified field chest (Item 13, Figure 4-2). The field chest provides a sturdy, reinforced carrying, shipping, and storage case. The case is a watertight case so long as the lid and body are in good condition, not damaged or rusted.

2-3. MECHANICAL ASSEMBLY.

a. Place the field chest, with its lid still secured, upside down in the area where it is to be assembled.

b. Release the chest latches and lift the chest bottom from the lid. The scrub sink components will remain with the lid.

c. Release the restraining strap from power unit (Item 2, Figure 2-1). Release catches (Item 3) and remove the power unit from the lid.

d. Release the restraining strap from the sink assembly (Item 1, Figure 2-1). Remove the sink from the lid, exposing the remaining components.

e. Release the straps retaining the sink components (Item 2, Figure 2-2). Note the location of these items (Figures 2-2 and 2-3) so as to facilitate repacking.

f. Remove all components from the lid. Lay these out on a clean surface.

g. Secure all restraining straps within the lid.

h. Replace the lid on the chest and latch it securely (Figure 2-5).

i. Swing the stand mounting angles into position, secure braces with wing nuts (Item 6, Figure 2-5) and attach to the field chest lid (1).

j. Position stand assembly (Item 5) as shown in Figure 2-5 and Figure 4-1.

k. Attach sink assembly (Item 4, Figure 2-5) using the latches as shown in Figure 2-4.

l. Snap the tray assemblies (Item 6, Figure 4-1) and tray leg brackets into place on either side of the sink assembly.

m. Position extension rods (Item 3, Figure 2-6) on the extension of the stand assembly (Item 5).

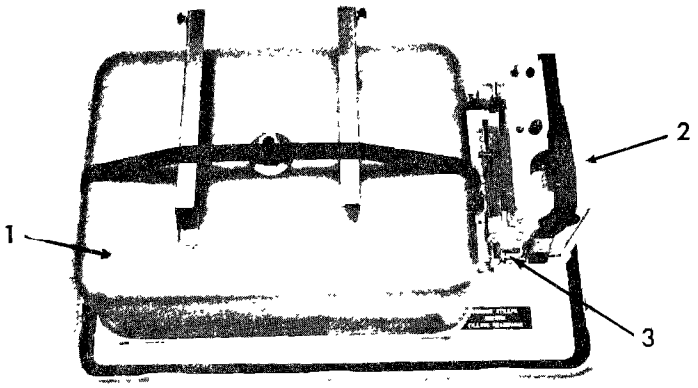

1. Sink assembly 2. Power unit
3. Catch

Figure 2-1. Packaged unit
Chest Base Removed

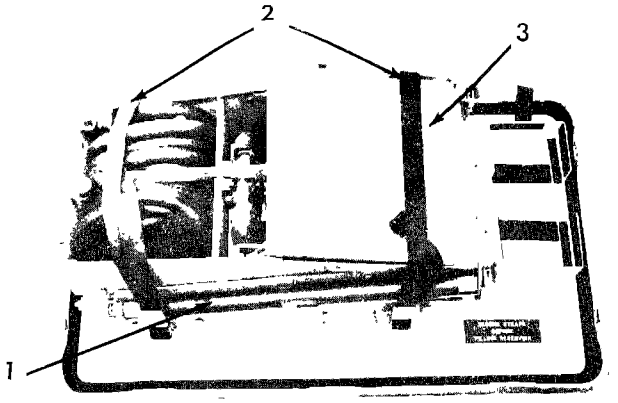

1. Extension rods 2. Restraining straps
3. Tray assembly

Figure 2-2. Packaged unit
Sink Removed

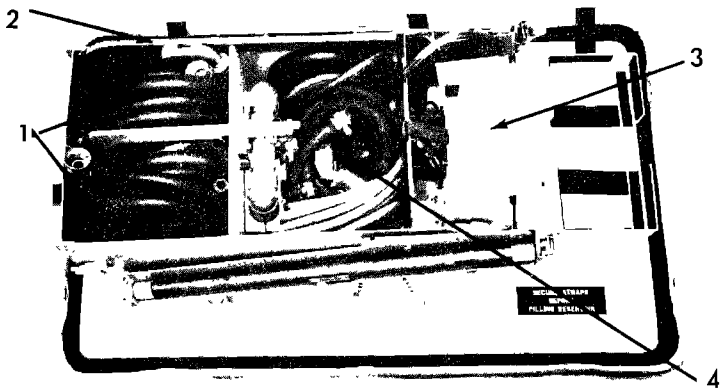

1. Hoses 2. Faucet
3. Detergent dispenser 4. Aspirator

Figure 2-3. Placement of
Components in Stand

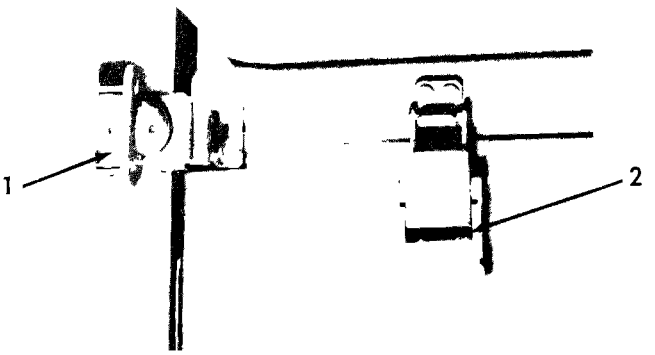

1. Clamp - basin channel to stand extension
2. Clamp - stand to basin

Figure 2-4. Sink Attachment
to Stand

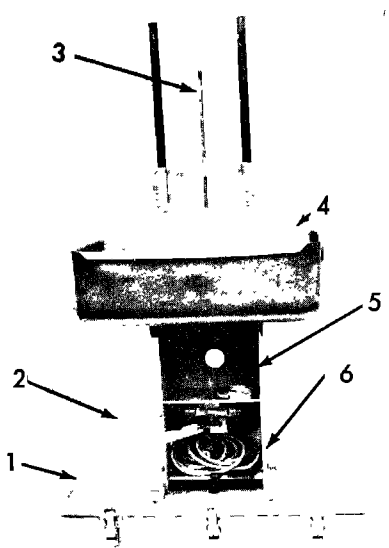

1. Field chest
2. Control lever
3. Faucet
4. Sink assembly
5. Stand assembly
6. Stand mtg angles

Figure 2-5. Assembly
to Stand

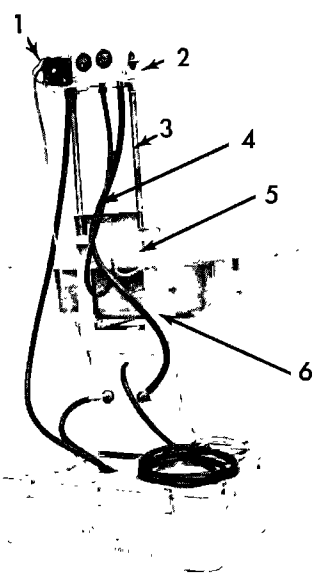

1. Cooling fan
2. Power unit
3. Extension rod
4. Faucet
5. Stand assembly
6. Detergent dispenser

Figure 2-6. Sink Unit
Pump Operation

n. Position the faucet (Item 3, Figure 2-5), through the bracket on the rear of the sink, locking in place with thumbscrew.

0. Attach the detergent dispenser (Item 6, Figure 2-6) in the location shown. Clip its dispensing spout to a bracket on the stand as shown. Attach the clear hose on the rubber base to the underside of the soap dispenser and lay the rubber base (foot pump) in front of the sink assembly.

p. Position power unit (Item 2, Figure 2-6), on the extension rods and mount the cooling fan (Item 1, Figure 2-6).

q. Refer to Figures 2-6 and 3-1 to make the hose connections. The hoses may be properly located after comparing the variation in end connectors and overall length.

r. Filling the reservoir. During use the reservoir may be refilled by removing the two inch plastic plug located in the chest lid. This plug can be unscrewed with the fingers. Refill with any suitable clean container.

s. Disassembly in reverse sequence.

2-4 ELECTRICAL INSTALLATION

2-5 The electrical installation consists of accomplishing the electrical and ground connection and an operational check of the heater and pump.

2-6 GROUND CONNECTION Remove the binding around the wire braid (Item 10, Figure 4-1), and stretch it out. Locate a proper ground, such as a water pipe, tighten the clamp (attached to the wire braid) to the pipe. If a meter is available, check the ground connection between the sink assembly frame and the grounding object.

CAUTION

All switches to be in the OFF position prior to connecting sink unit to a power source.

2-7 ELECTRICAL CONNECTION. Use an electrical receptacle supplying the required voltage (see Specifications, paragraph 1-5). This receptacle must be located at least five feet above the ground/floor as the supply cord plug is not an explosion-proof type. The receptacle must be properly grounded and be so designed to accept the three prong plug supplied with the sink assembly. Refer to Item 1, Figure 4-1 to determine proper connection of the electrical cable.

CAUTION

The chest reservoir shall be filled or another suitable water supply shall be connected PRIOR to making ANY Pump of Heater operational checks.

2-8 PUMP OPERATIONAL CHECK Refer to Figures 4-3/ 4-4 for controls identification. Plug valve handle should be in the "PUMP" position.

Move the toggle switch labeled "PUMP" (Item 2) to the "ON" position. Move the knee lever to the right (activated) position. Water should begin to flow within thirty seconds. If no water flows within this period, refer to the troubleshooting section, paragraph 3-9 of this manual. Volume of water flow figures are listed in the Specifications, paragraph 1-5. With the pump operating, check all lines for leaks.

2- 9 HEATER OPERATIONAL CHECK. To provide heated water, toggle switch (Item 2, Figure 4-3) labeled "HEATER" is moved to the "ON"position. Moving the kneee operated lever to activated position - (right) will cause power to be supplied to the heater located in the power unit. The indicator light (Item 3, Figure 4-3) will also light to indicate that the heater is operating. The water temperatures available are given in the Specifications, paragraph 1-5. These figures anticipate an ambient water temperature of 70° F. When the pump and heater are operating normally, water temperatures should approach the figures given in Table I, with the knee lever in the position indicated by the table. Water temperature will vary, depending upon the rate of flow through the heater. An increase in flow causes a decrease in temperature, and decreasing the flow will increase the temperature.

2-10 DETERGENT DISPENSER. The dispenser is mounted as shown in Figure 4-2 on the back outside edge of the sink. A supply spout extends over the sink and a foot operated pump is located just in front of the scrub sink assembly. This arrangement makes it possible to supply the dispenser liquid to the sink user while leaving both hands free. The dispenser has a one quart container and can be used to supply any type liquid soap. The pump provides ample pressure to transport even heavy detergents through the spout. Depressing the foot pump forces air pressure into the dispenser container. The pressure within the bottle then forces the liquid out the spout. It is possible to vary the flow of the liquid. This is necessary due to the different weights of liquids and ambient temperature. To increase the flow, turn outer plug (Item 4, Figure 4-7 ~~5~~) all the way down. This prevents any air pressure release from the bottle and maximum pressure on the liquid. Adjusting the outer plug up will release air pressure from the bottle and reduce liquid flow.

To fill the bottle without removing, unscrew the inner plug and insert a funnel in its place. Fill the bottle with the desired liquid. DO NOT fill above the one inch from the bottle top. Overfilling will cause the liquid to be drawn into the foot pump tube when operated.

SECTION III

OPERATION

3-1. OPERATION.

3-2. PUMP AND HEATER. The following procedure covers the operation of the sink assembly with both pump and heater functioning. Refer to Figure 3-1 for flow.

a. Base water reservoir and detergent dispenser should be filled.

b. Ground clamp must be securely fastened.

c. All electrical connections must be made.

d. All hoses must be located correctly (see Figure 3-1).

e. Move the "PUMP" switch on "ON".

f. Move the "HEATER" switch on "ON".

g. Activate (move to right) the knee operated lever. The "HEATER" indicator light will light.

h. Warm water should flow within 60 seconds. If the unit fails to produce the desired results, refer to the section on trouble-shooting, paragraph 3-9.

3-3. GRAVITY OPERATION, NO POWER. It is possible to use the sink assembly without electrical power available. The following procedure is necessary to convert the unit to gravity operation. Refer to Figure 3-2 for relocation of hoses and a typical water supply arrangement. Refer to Figure 3-3 on flow.

a. Disconnect the supply hose (Figure 3-2) from the fitting labeled "PUMP INLET" and connect at inlet labeled "GRAVITY INLET".

b. Remove the check valve from the lower end of this hose.

c. The lower end of this hose is moved to the water supply (Figure 3-2 example). This supply must be elevated at least three feet above the faucet.

d. Cap the fitting labeled "PUMP INLET".

e. Move the upper by-pass hose from its normal position to that as shown in Figure 3-2, connected between fitting labeled "FOR GRAVITY CONNECT HEATER TO CONTROL VALVE" and the knee operated lever valve.

f. Plug valve handle should be in the "GRAVITY" position.

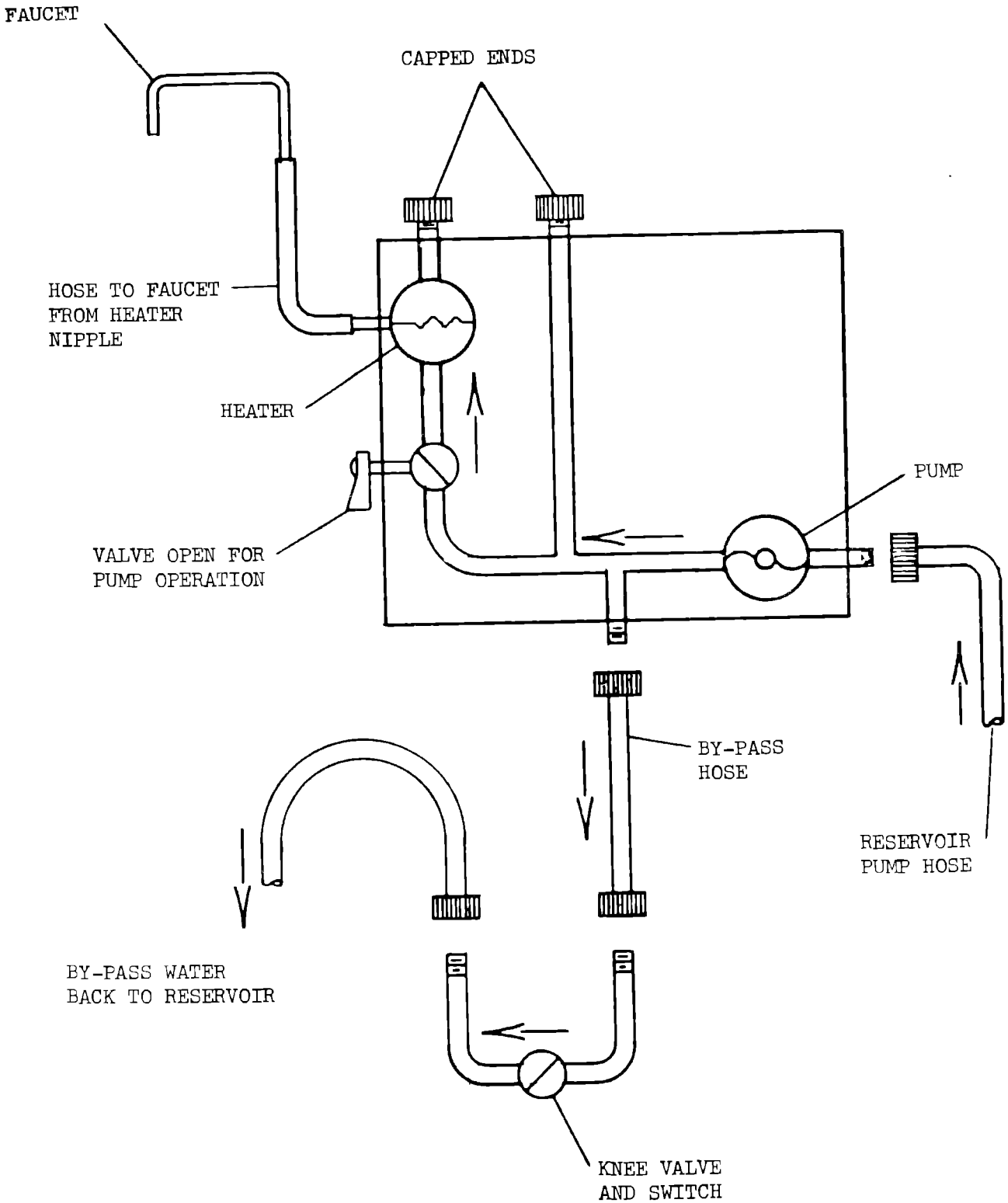

Figure 3-1. Pump Operation Flow

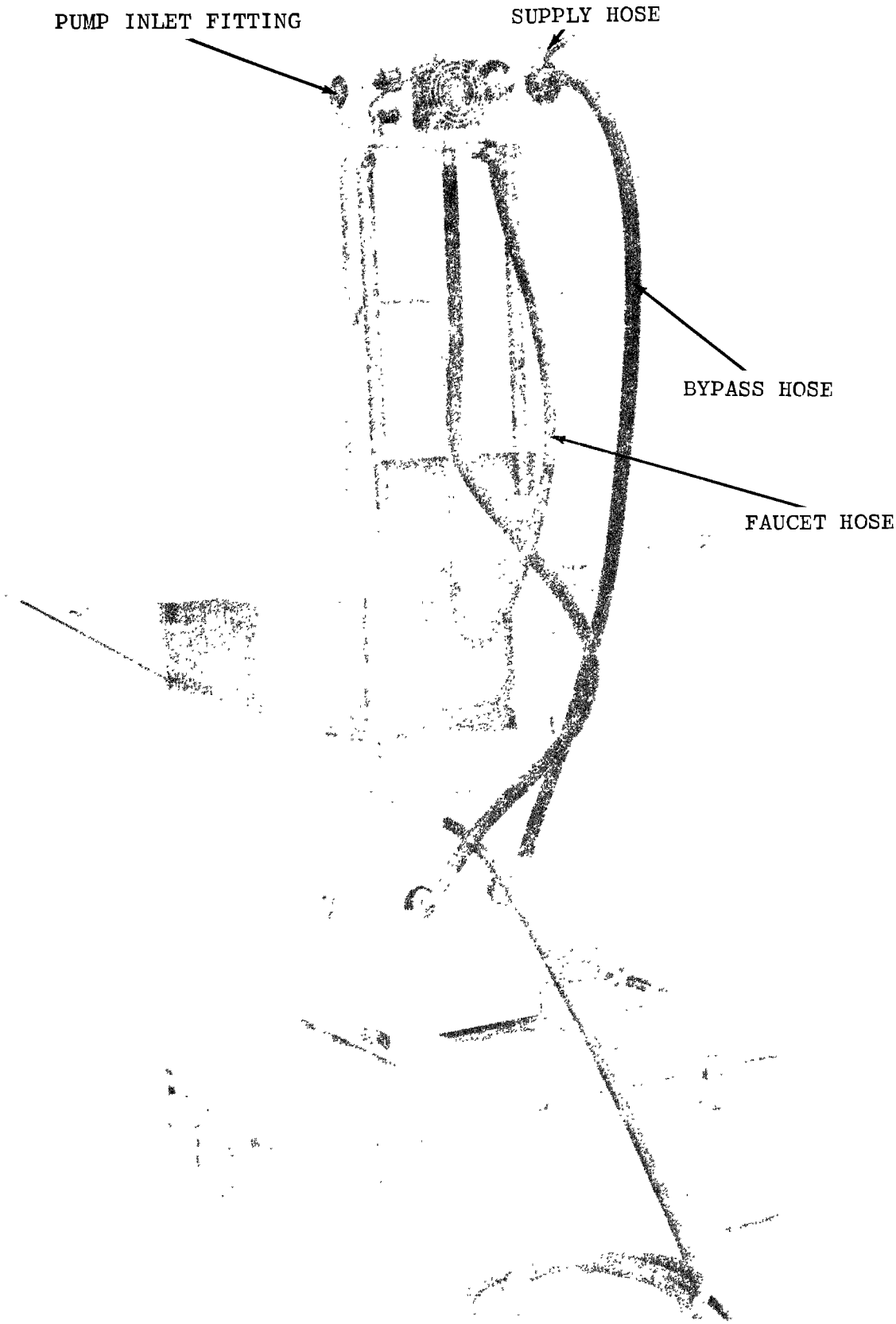

Figure 3-2. Gravity Operation

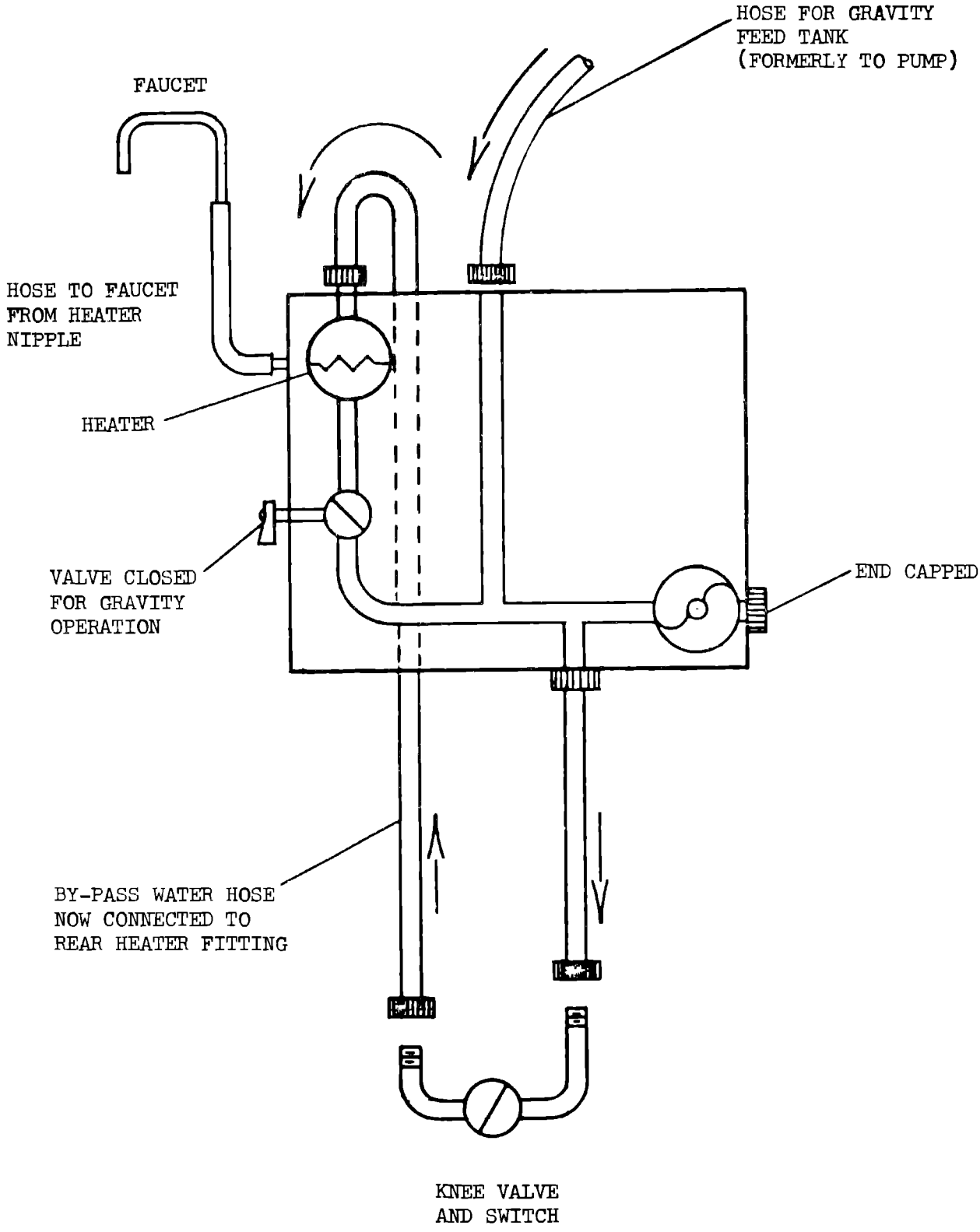

Figure 3-3. Gravity Feed Flow

g. Operate the knee lever and place the suction end of the aspirator over the end of the faucet. The aspirator should be pumped until water flows: the lines are now filled and the sink unit is ready for use.

3-4 GRAVITY OPERATION-POWER AVAILABLE. Should power be available but the pump is inoperable or a pressure water supply is available, the sink assembly can still supply hot water. The hose arrangement is identical as in paragraph 3-3, "GRAVITY OPERATION". The "HEATER" switch is "ON". The "PUMP" switch is "OFF". Water flow and heater power is controlled by the knee operated lever.

3-5. ELECTRICAL DESCRIPTION.

3-6. WIRING. The wiring of the sink assembly is divided into two parts the internal and the external.

3-7. INTERNAL WIRING. This circuit consists of all wiring contained within the power unit. Refer to Figure 3-4.

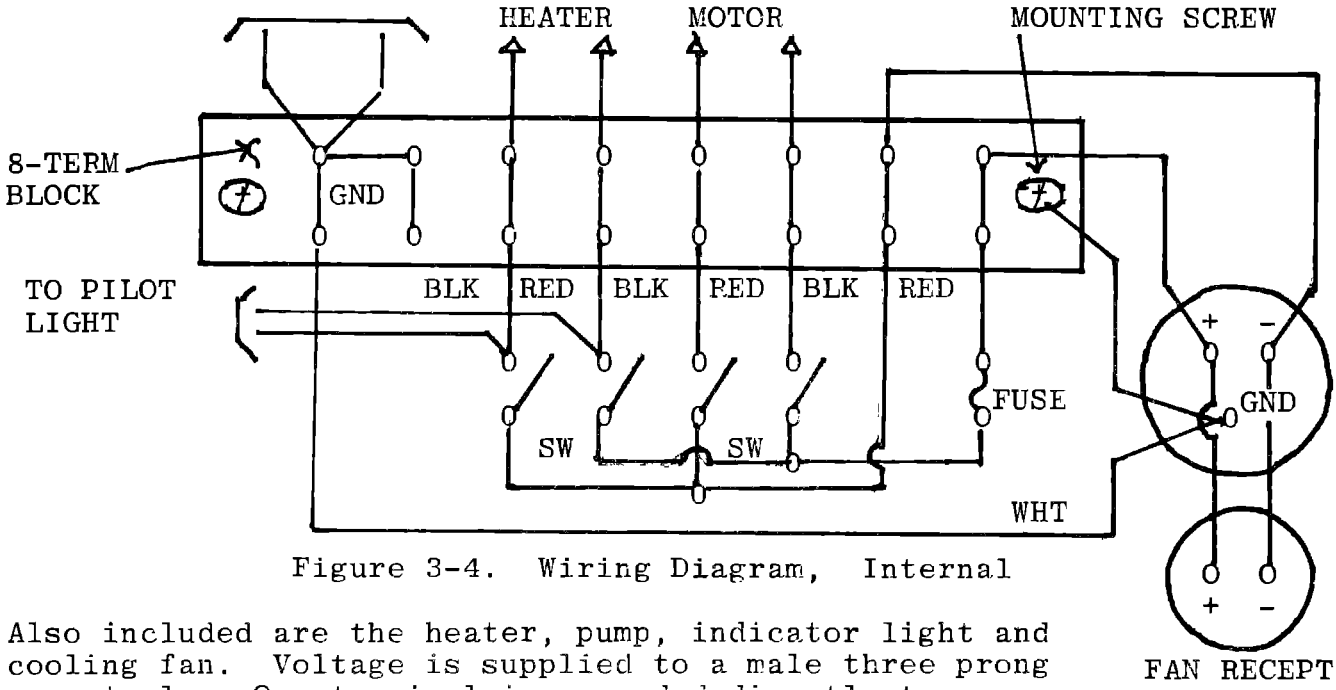

Figure 3-4. Wiring Diagram, Internal

Also included are the heater, pump, indicator light and cooling fan. Voltage is supplied to a male three prong receptacle. One terminal is grounded directly to a screw retaining the terminal block. The other two leads, red and black color coded, are attached to two double pole, single throw toggle switches. The red lead is fused. One toggle switch, labeled "PUMP" energizes the pump motor and the other switch, labeled "HEATER" energizes the heater and the indicator light, when voltage is applied from the "KNEE" switch through the three prong input receptacle and fuse. The cooling fan is parallelto the input receptacle and also is controlled by "KNEE" switch.

NOTE

It is possible to supply power to either or both heater and pump; however, if the pump is not operating or the water supply fails and the heater is "ON", the heater will overheat. An internal thermostat will open, pro-ecting the heater. It will be necessary to allow the heater to cool before the thermostat will again supply current to the heater.

3-8. EXTERNAL WIRING. This circuit consists of that wiring in the sink assembly not contained within the power unit. The circuit is shown in Figure 3-5 and consists of: the main supply cable, a No. 14 AWG, 3 wire cable with female plug. Current is passed through the main cable when the knee microswitch is activated, through the female plug to the matching receptacle in the power unit. The knee switch must be activated to operate the pump and heater.

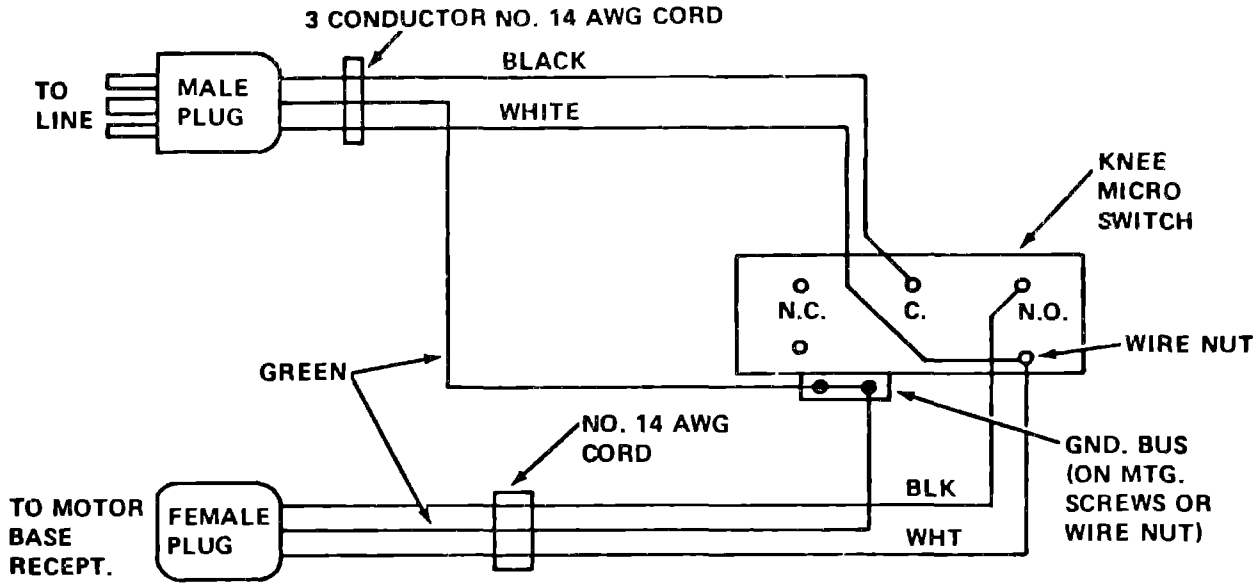

Figure 3-5. Wiring Diagram, External

3-9. TROUBLESHOOTING GUIDE. This paragraph summarizes the probable cause of troubles which may be encountered while operating the scrub sink.

TABLE II. TROUBLESHOOTING

Trouble	Probable Cause	Remedy
Operator receives shock	Poor ground connection	Locate better ground or tighten clamp
	No grounding in supply receptacle	Locate better receptacle
No water, pump does not operate	Electrical cables not plugged in, or loose	Check cables and tighten
	Internal wiriing loose	Tighten connection
	Blown fuse	Check and replace
	Motor overheated - Internal thermo protector open	CAUTIOUSLY feel motor shell for excess heat, Turn off unit til cool
	Knee operated switch or "PUMP" switch defective	Replace switch
	Pump motor burned out	Replace pump assembly with 4320-01-036-9919
No water, pump is operating	Water supply low	Refill reservoir
	Hose kinked	Clear kink
	Hoses hooked up wrong	Check and correct connections
	Plug valve set on "GRAVITY"	Change valve position
	Air /Suction leak at Pump input hose	Check hose washer Tighten connections
Gravity operation, water runs continually knee valve closed	Plug valve set on "PUMP"	Change valve position

TABLE II. TROUBLESHOOTING

Trouble	Probable Cause	Remedy
Gravity operation no water	Water supply low	Refill reservoir
	Water supply container below recommended height	Raise container
	Hoses kinked	Clear lines
	Air in lines	Aspirate lines (see paragraph 3-3)
Water leaks	Check all fittings and connections	Tighten fittings and connections, replace rubber washers, if necessary
Cold water supplied indicator light not lit	Defective "HEATER" switch	Replace switch
	Poor connection, no circuit	Check and tighten leads to heater circuit
Hot water supplied indicator light not lit	Indicator light defective	Replace indicator light

SECTION IV

PARTS LIST

4-1. GENERAL. This section lists, describes and illustrates the main assemblies, subassemblies and detail parts of the Sink Unit which are important for field service. The first four illustrations are of the complete Sink Unit. The following two illustrations give a complete parts breakdown of the detergent dispenser and the pump assembly.

4-2. EXPLANATION OF COLUMNS USED.

4-3. KEY NUMBER. The figure and index numbers key the parts breakdown list to the applicable illustration. The number preceding the dash is the figure number of the illustration. This figure number appears at the beginning of each page or listing. The number following the dash is the index number of a part appearing in the illustration.

4-4. PART NUMBER. This column lists the part number assigned each assembly and/or part by the manufacturer.

Manufacturer	Contract Number
ATLANTIC INDUSTRIES, INC.	DLA120-84-C-4350

4-5. NATIONAL STOCK NUMBER. This column lists available National Stock Numbers as assigned by the Procuring Activity.

4-6. NOMENCLATURE. This column contains the basic name of the part and any descriptive information or dimensions necessary to identify that part.

4-7. QUANTITY. The figure in this column indicates how many of each item is used in each complete assembly.

I N T E N T I O N A L L Y

L E F T

B L A N K

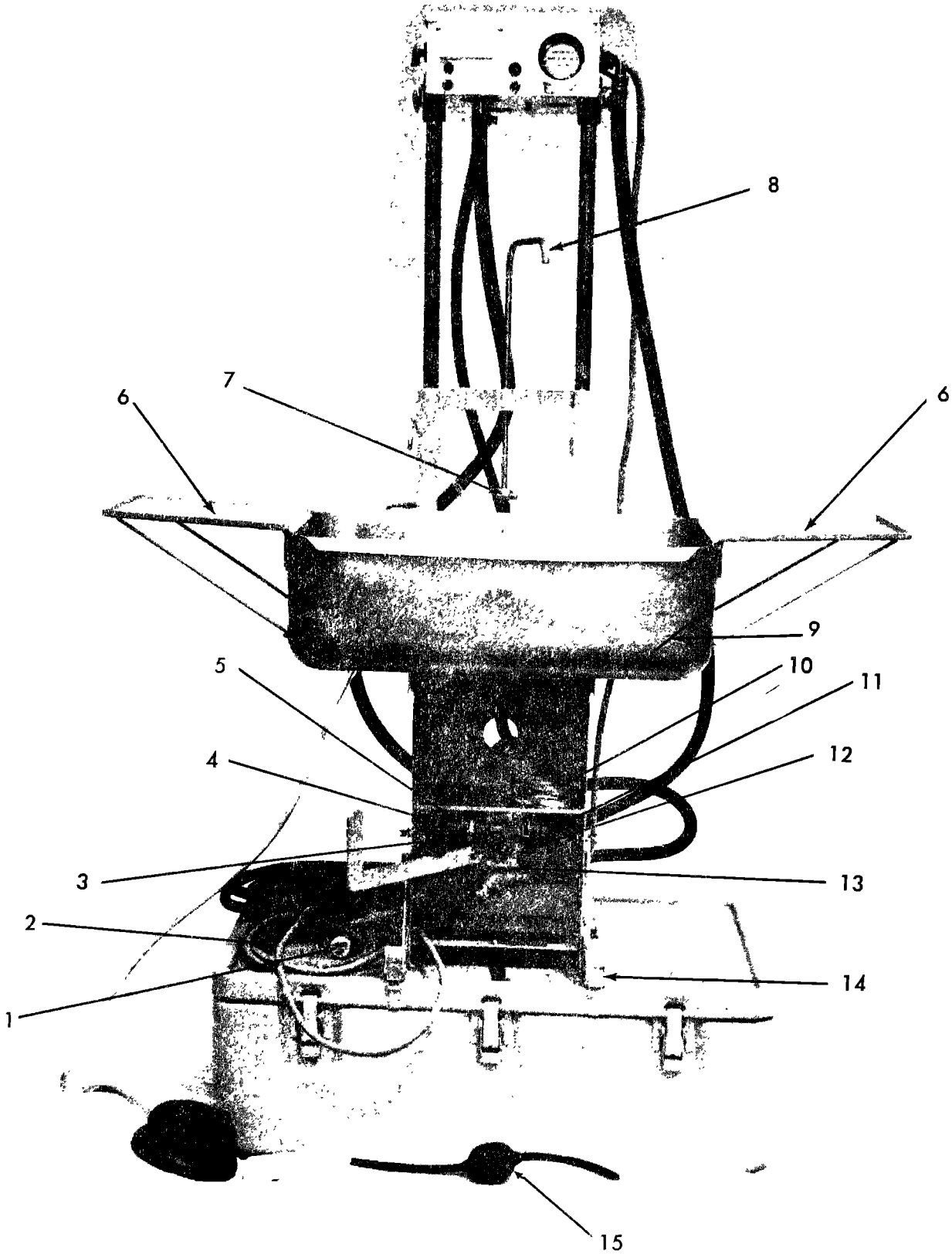

Figure 4-1. Sink Unit (Front View)

Figure 4-1

KEY	VENDOR P/N	NSN	SOURCE	NOMENCLATURE	QTY
4-1-1	SS-0140	5935-00-148-8190	DPSC	Connector, Plug, Electrical, Three Male Contacts	1
-2	SS-0137	6145-00-548-1113	DISC	Cable Power, Electrical Three Conductor, No. 14 AWG, Stranded	1
-3	SS-0120-1	4510-00-442-6880	DPSC	Valve, Water, Knee Operated, Brass 1/2 in. - 14 NPT, Female Thd	1
-4	SS-0246			Nipple, PVC 4½" long	2
-5	SS-0247			Nipple, PVC 1½" long	2
-6	SS-0154	6545-00-442-3182	DPSC	Tray Assembly	2
-7	SS-0146A	4730-00-202-8972	DCSC	Clamp, Hose	2
-8	SS-0162			Faucet, 3/8" OD x .049 wall thk, 22 in long	1
-9	SS-0160			Sink Assembly	1
-10	SS-0115	6145-00-729-9648	DISC	Braid, Wire, Tin Coated 3/8" Flat (U/I FT)	1
-11	SS-0248			Elbow, ½" PVC	
-12	SS-0120-3	6545-00-477-6710	DPSC	Cam, Micro-Switch	1
-13	SS-0134			Switch, Explosion Proof	1
-14	SS-0164			Catch, Luggage	1
-15	SS-0151	6640-00-494-3726	DPSC	Aspirator Bulb Note: NSN item w/o tubing	1

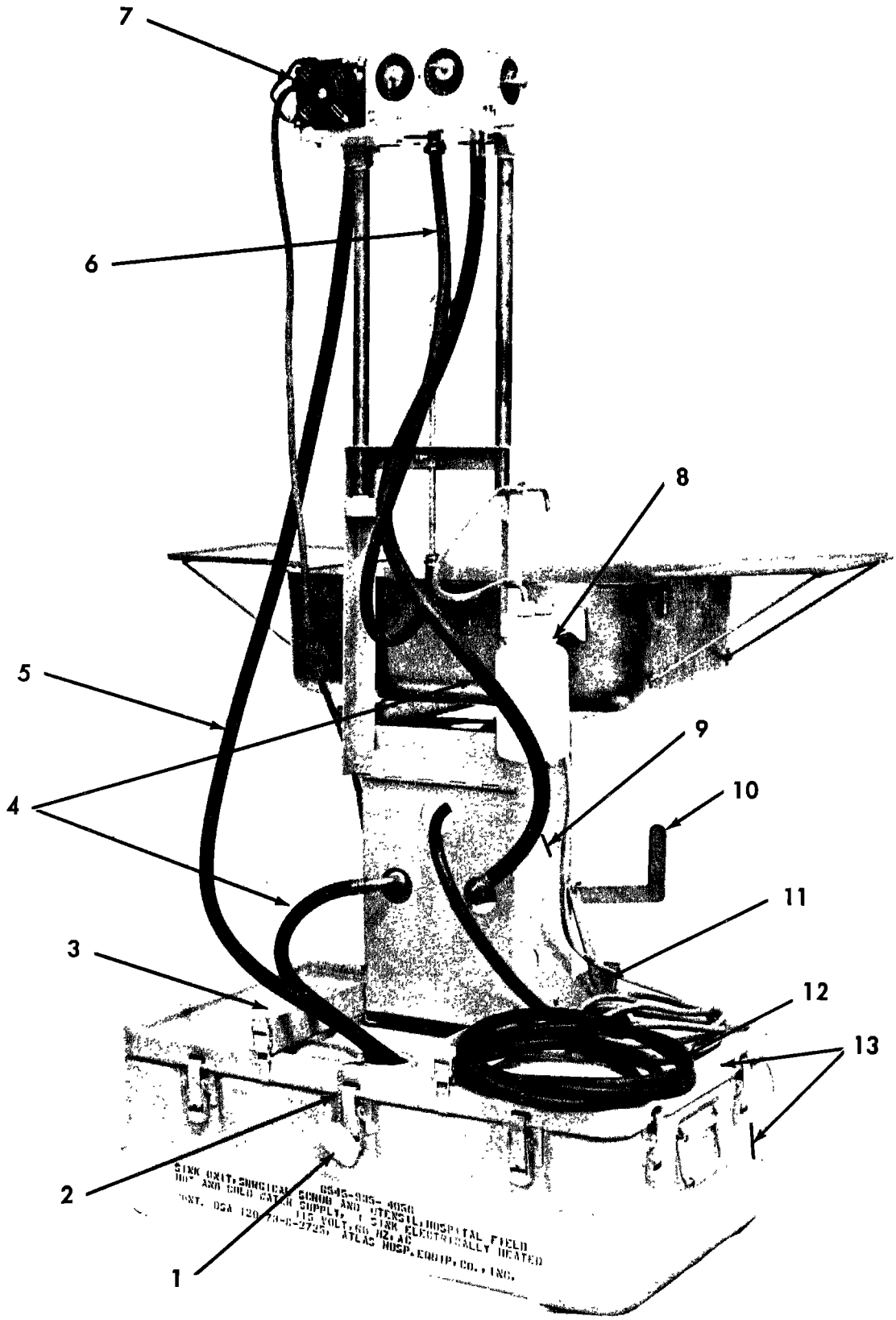

Figure 4-2. Sink Unit (Rear View)

Figure 4-2

KEY	VENDOR P/N	NSN	SOURCE	NOMENCLATURE	QTY
4-2 -1	SS-0092	8110-00-436-1880	DPSC	Plug, Drum, w/Chain	1
-2	SS-0097	4010-00-913-8063	DISC	Chain, Beaded	Foot
-2A		4030-00-262-1573	DISC	Fitting, End	2
-3	SS-0108			Mounting Angle, Stand, Right	1
-4	SS-0143	6545-00-485-0620	DPSC	Hose Assembly, By-Pass Return, 1/2 in. id, 7/8 in. od, 46 in. lg. hose	2
-5	SS-0142	6545-00-485-0619	DPSC	Hose Assembly, Inlet, 1/2 in. id, 7/8 in. od, 72 in. lg. hose	1
-6	SS-0146	6545-00-485-0621	DPSC	Hose Assembly, Faucet, 3/8 in. id, 21/32 in. od, 36 in. lg. hose	1
-7	SS-0139	5935-00-081-3251	DESC	Connector, Plug, Electrical, Three Female Contacts, Twist-Lock	1
-8	SS-0152	6530-00-299-8114	DPSC	Dispenser, Detergent	1
-9	SS-0107			Frame and Base	1
-10	SS-0119	6545-00-477-6711	DPSC	Lever, Control Arm	1
-11	SS-0109			Mounting Angle, Stand, Left	1
-12	SS-0145	6545-00-485-0623	DPSC	Hose Assembly, Waste, 3/8 in. id, 21/32 in. od, 144 in. lg. hose	1
-13	SS-0201			Chest w/Lid, Field (modified)	1

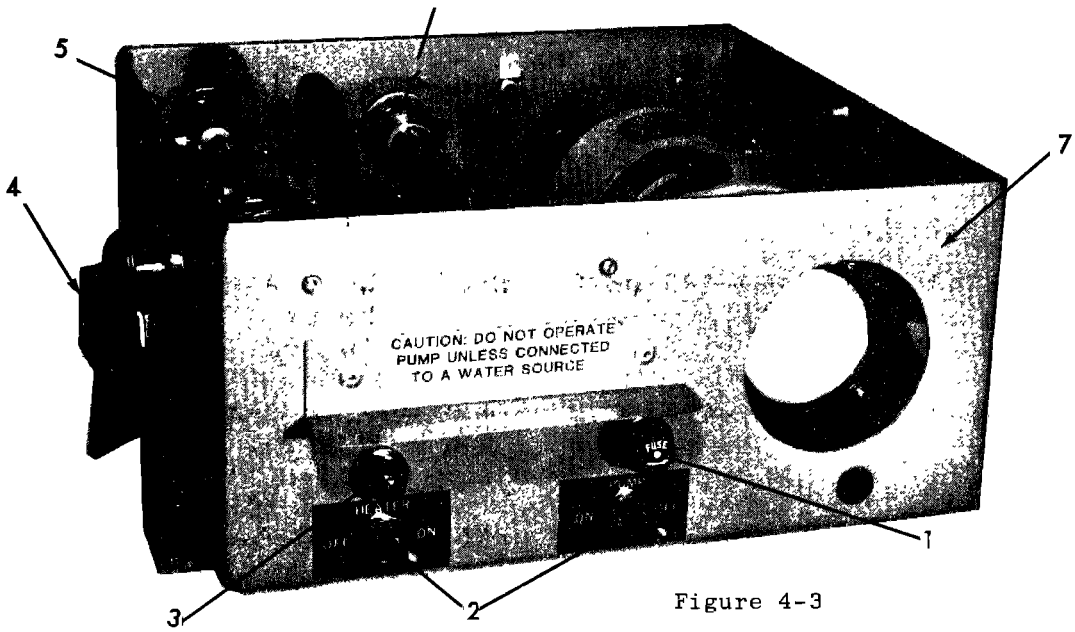

Figure 4-3

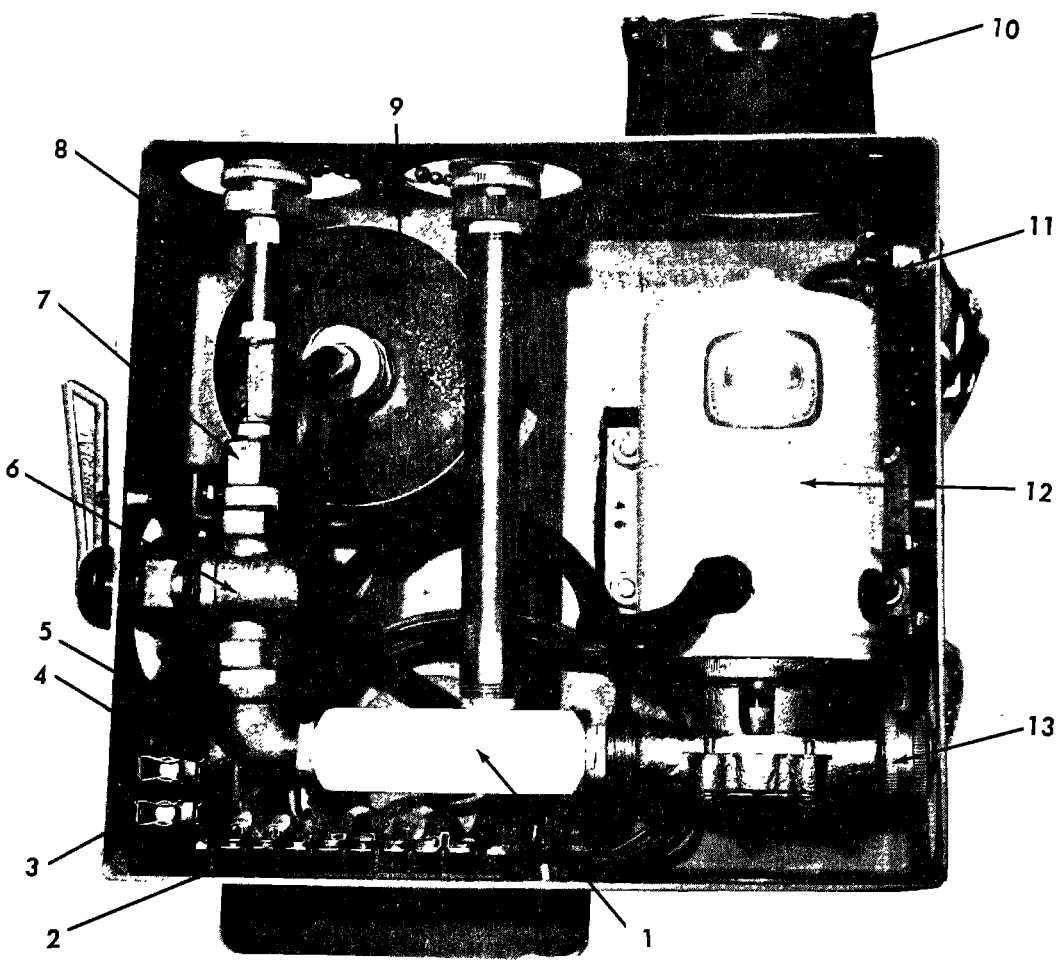

Figures 4-3 and 4-4. Sink Unit-Power Unit

Figure 4-3

KEY	VENDOR P/N	NSN	SOURCE	NOMENCLATURE	QTY
4-3-01	SS-0031	5920-00-556-0144	DESC	Fuseholder, Plastic	1
- 2	SS-0028	5930-00-655-4247	DESC	Switch, Toggle, dpst	2
- 3	SS-0029	6210-00-575-3561	DGSC	Light, Indicator, Red	1
- 4	SS-0095	5340-00-240-0328	DISC	Catch	2
- 5	SS-0200-8			Coupler, Hose	1
- 6	SS-0041			Coupler, Hose	2
- 7	SS-0200A			Housing, Power Unit	1

Figure 4-4

4-4-01	SS-0200-7			Manifold, Restricting	1
- 2	600-8GMFP	5940-00-983-6049	DGSC	Terminal Board, 8 Term	1
- 3	350244	5920-00-937-8161	DESC	Fuse Clip, Spare	2
- 4	SS-0032	5920-00-280-3562	DESC	Fuse, Cartridge, 20 Amp	3
- 5	SS-0037	4730-00-253-5757	DCSC	Elbow, Pipe, 90° Street	1
- 6	102-HD-06		30327	Valve, Cock, 3/8 mpt x 3/8 mpt	1
- 7	120 6x2			Adapter, Br., 3/8 f to 1/8 mpt	1
- 8	215PNL-2-20	4730-00-196-1963	DCSC	Nipple, Pipe, 1/8 mpt x 2" lg	1
- 9	SS-397-M2	4410-00-442-6881	DPSC	Heater, Water, Electric 115V, 14 Amp, 60 HZ	1
-10	SU2A5 Modified	4140-01-127-3916	DPSC	Fan Assembly, w/cord set, quard and mtg clips	1
-11	SS-0033	5935-00-616-2420	DESC	Connector, Receptacle, Electrical, 3-Male contacts, Twist Lock	1
-12	SS-0027	4320-01-036-9919	DPSC	Pump, Rotary, 115V, 60 HZ	1
		NOTE: Refer to page 4-10 for pump repair kit			
-13	SS-0011			Cap and Chain, Hose	1
	SS-011-1	4010-00-913-8063	DISC	Chain	Foot
	SS-011-2	4030-00-262-1573	DISC	Fitting, End	EA

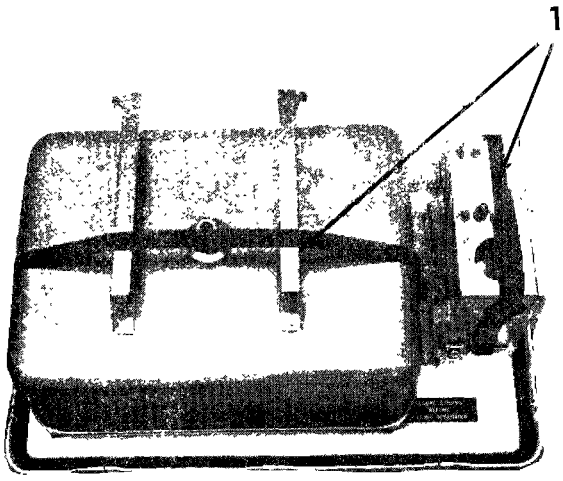

Packaged Unit With Chest Base Removed

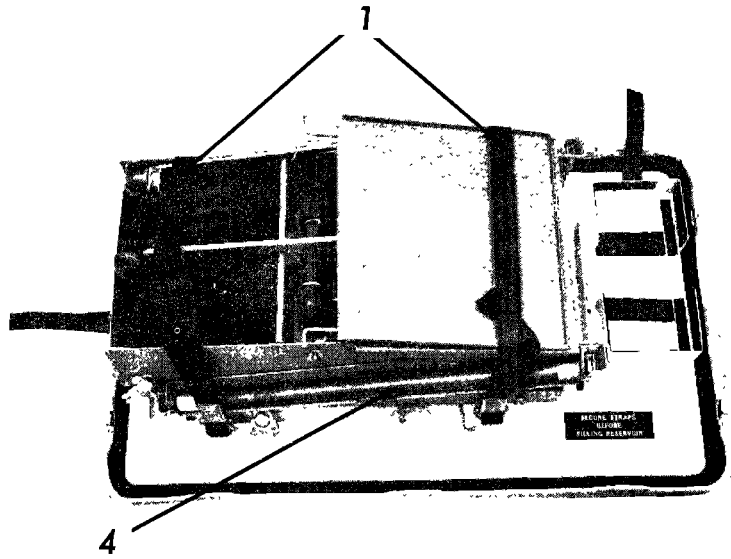

Packaged Unit With Sink Basin Removed

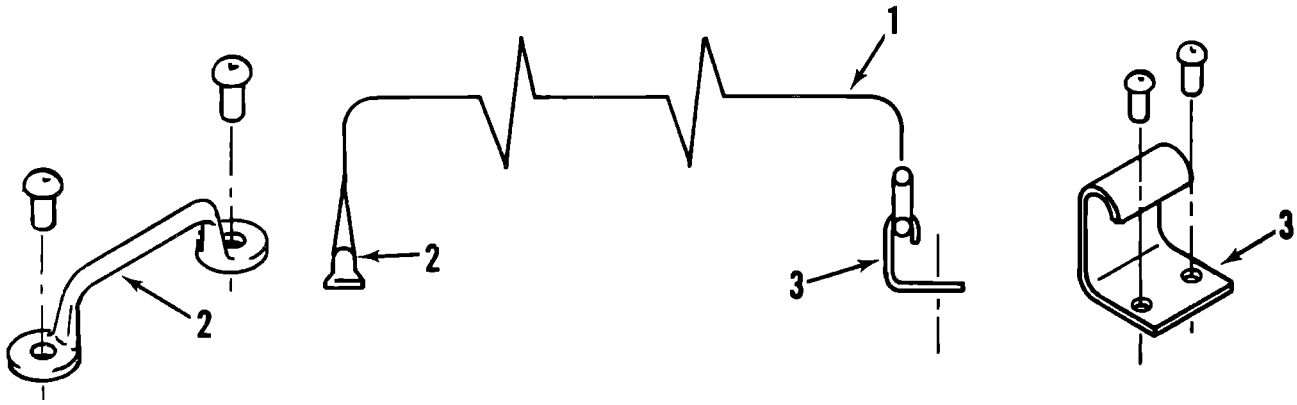

Figure 4-5

KEY	VENDOR P/N	NSN	SOURCE	NOMENCLATURE	QTY
4-4-1	SS-0149			STRAP, NYLON ASSEMBLY	4
-2	SS-0094	5340-01-101-1075	DISC	LOOP, FOOTMAN'S	4
-3	SS-0093			KIT, BRACKET	4
-4	SS-0160			ROD, EXTENSION	2

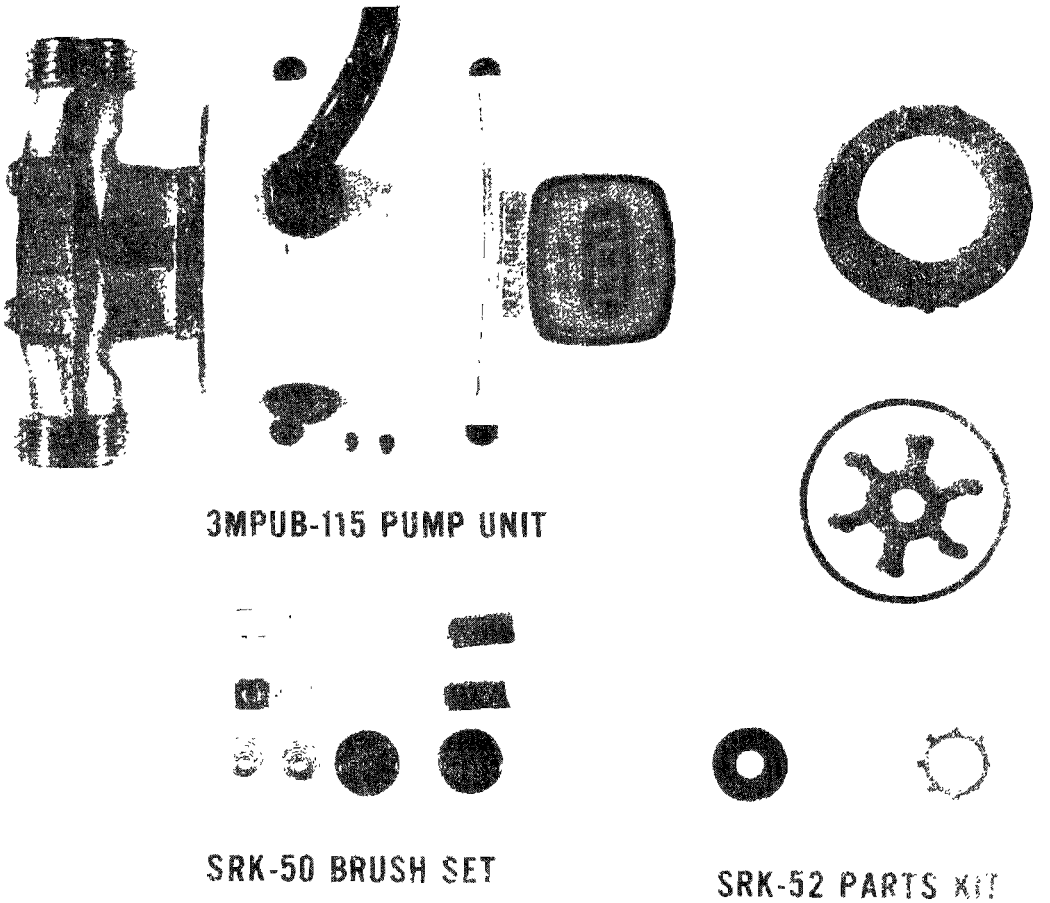

Figure 4-6

Pump Assembly and Repair Kits

VENDOR P/N	NSN	SOURCE	NOMENCLATURE
3MPUB-115	4320-01-036-9919	DPSC	PUMP UNIT, ROTARY
SRK-50	5977-01-050-2178	DPSC	BRUSH SET, ELECTRICAL CONTACT (Fits all electric motors except on Stewart Avionics contract)
SRK-52	6545-01-070-1259	DPSC	PARTS KIT, FIELD SINK (Fits units w/1-31/32 in. OD Cam Rings

NOTE: The black cam ring furnished with SRK-52 has "Lobes" which are designed to compress and provide a firm fit to the bore of the pump body. A firm pressure may be required to properly seat the cam ring.

KEY	VENDOR P/N	NSN	SOURCE	NOMENCLATURE	QTY
4-5	SS-0152	6530-00-299-8114	DPSC	Dispenser, Detergents	1
-1	SS-0205			Spout, Stainless Steel	1
-2	SS-0206			Plug, Plastic Spout	1
-3	SS-0207*			Gasket, Fibre	1
-4	SS-0208			Plug, Outer	1
-5	SS-0209*			Spring, Tapered	1
-6	SS-0210*			Ball, Check Valve	1
-7	SS-0211			Plug, Inner	1
-8	SS-0212*			Gasket, Fibre	1
-9	SS-0213*			Hose, 5-1/2 ft.	1
-10	SS-0214			Nipple, Hose Base	1
-11	SS-0215			Upper Part (For Rubber Base)	1
-12	SS-0216			Lower Part (For Rubber Base)	1
-13	SS-0217			Jar	1
-15	SS-0219*			Gasket, Rubber, Inner Jar	1
-16	SS-0220*			Check Valve Ball Housing Pin	1
-17	SS-0221			Housing, Check Valve Ball	1
-18	SS-0222*			Ball, Check Valve	1
-19	SS-0223			Housing, Check Valve	1
-20	SS-0224*			Ball, Check Valve	1
-21	SS-0225*			Washer	1

Figure 4-7 (Continued)

KEY	VENDOR P/N	NSN	SOURCE	NOMENCLATURE	QTY
4-5-22	SS-0226			Plate, Wall	1
-23	SS-0227			Holder, Jar	1
	SS-0228	6545-00-456-2421	DPSC	Kit, Dispenser (Contains Parts denoted by *)	1

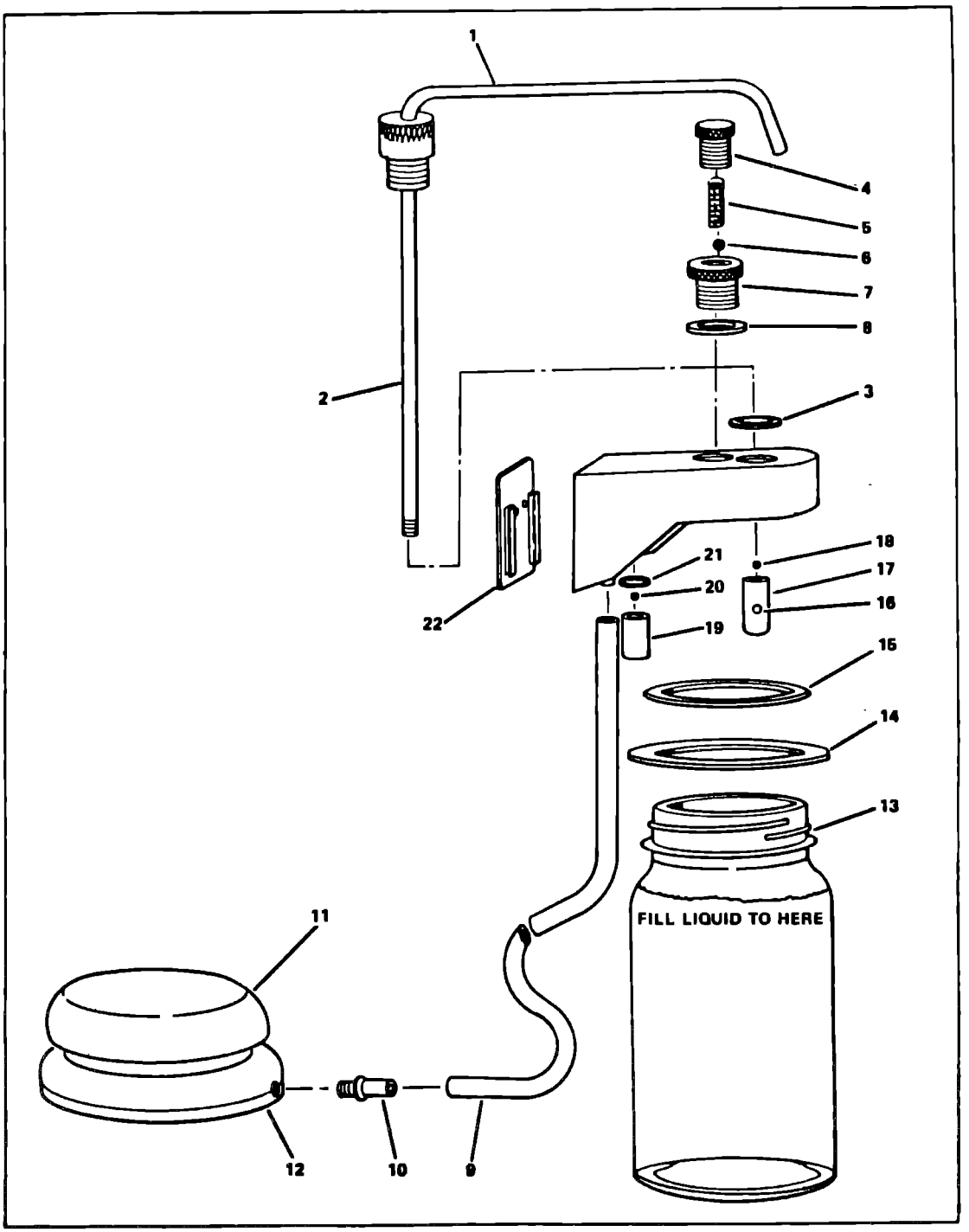

Figure 4-7 Detergent Dispenser

LIST OF UNILLUSTRATED PARTS

VENDOR P/N	NSN	SOURCE	NOMENCLATURE	QTY
SS-0012			Plate, Wiring Diagram	1
SS-0013			Plate, Ident., "Pump Inlet From Reservoir"	1
SS-0014			Plate, Ident., "Cap for Gravity Operation"	1
SS-0015			Plate, Ident., Gnd. Heat Moto Line	1
SS-0016			Plate, Ident., "Gravity Inlet/ Cap for Pump Operation"	1
SS-0017			Plate, Ident., "For Gravity Connect Heater To Control Valve, Cap for Pump Operation"	1
SS-0249			Plate, Ident., "Pump"	1
SS-0020			Plate, Ident.,"Heater to Faucet"	1
SS-0021			Plate, Ident., "By-Pass to Control Valve"	1
SS-0103			Plate, Ident., "Secure Straps Before Filling Reservoir"	1
SS-0023			Plate, Ident., "Gravity"	1
SS-0065			Strike, Extension, Frame	1
SS-0064			Strike, Stand	1
SS-0025			Strike, Housing	1
SS-0171	4820-00-288-6677	DCSC	Valve, Check	1
SS-0169			Washer, Metal, Seal	1
SS-0168			Washer, Rubber, Seal Silicone, Sink Drain	1
--	4510-00-242-4358	GSA	Stopper, Drain, 1 in.	1
--	4010-00-451-4545	DISC	Bead Chain Assy. 9 in.	1

REPACKING - When disassembling and repacking the components of the sink unit, careful attention to original pack and placement should be observed. Fan mounting clips MUST be positioned in the holes provided in the shelf and unit secured with restraining strap as shown on illustration below

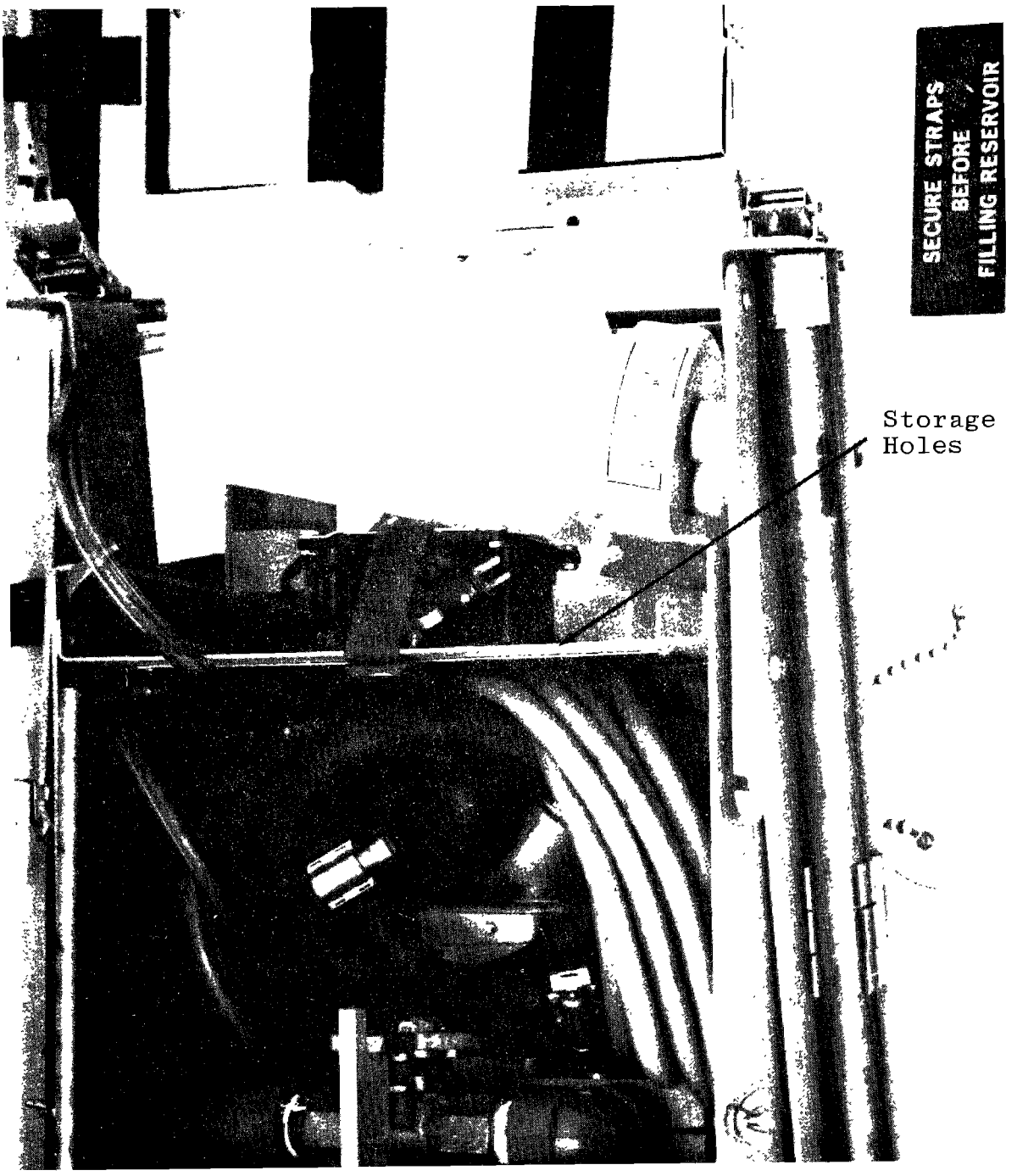

Figure 4-8, Repack Instructions