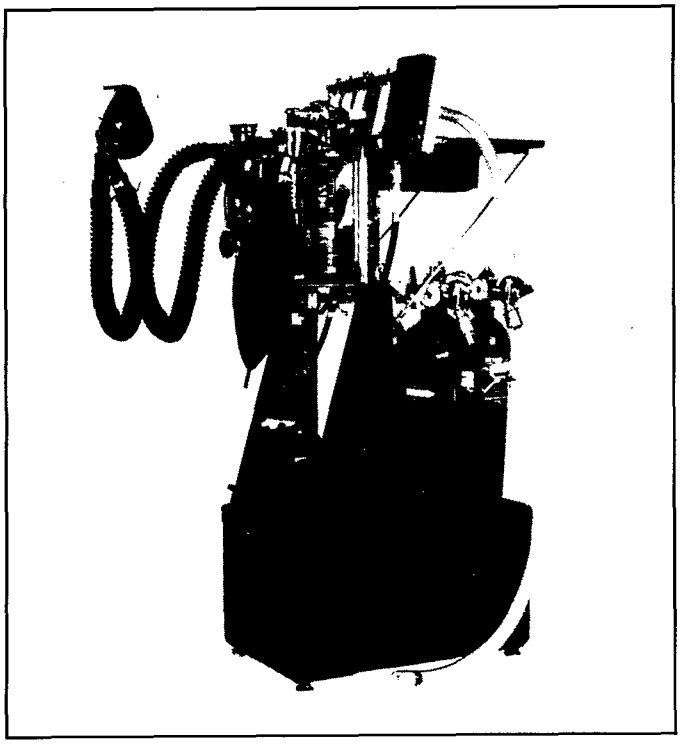

# Model 885A

## Anesthesia Apparatus, Gas, Nitrous Oxide, Oxygen and Volatile Liquid Anesthetics, Portable 4 Cylinder Capacity

National Stock Number 6515-01-185-8446
Defense Personnel Support Center

Ohmeda
A Division of The BOC Group Inc
Madison Wisconsin 53707
BOC Health Care
Stock Number 0178-1683-000
12/87 – Revised

Instruction and Service Manual with Illustrated Parts List

# Table of Contents


**List of Illustrations** . . . . . 2

**List of Tables** . . . . . 2

**User Responsibility** . . . . . 2

**Precautions** . . . . . 3
Warnings . . . . . 3
Cautions . . . . . 4

**1/Specifications** . . . . . 5

**2/Description** . . . . . 6
2.1 General . . . . . 6
2.2 Items and Components . . . . . 8
A. Gas Supply Equipment . . . . . 8
B. Control Head . . . . . 9
C. Breathing Circuit Items . . . . . 12
D. Additional Items . . . . . 13
E. Protective Closure Devices . . . . . 13

**3/Setup** . . . . . 15
3.1 General . . . . . 15
3.2 Breathing Circuit Setups and Checkout . . . 17
A. Adult Rebreathing Circuit . . . . . 17
B. Pediatric Partial Rebreathing Circuit . . . . . 19
3.3 Draining Vaporizer . . . . . 20

**4/Checkout and Operation** . . . . . 22
4.1 Theory of Operation . . . . . 22
A. The Delivery Circuit . . . . . 22
B. The Breathing Circuits . . . . . 22
4.2 Preoperative Tests and Procedures . . . . . 23
A. Non-Adjustable Relief "Pop-Off" Valve . . . . 23
B. Zeroing the Breathing Circuit Pressure Gauge . . . . . 23
C. Leak Test Procedures and Troubleshooting Guides . . . . . 24
4.3 Vaporizer Operation . . . . . 25
A. Total Flow Vapor . . . . . 25
B. Use of the Flow Calculator . . . . . 26
C. Use of the Formulas and Volatile Anesthetics Chart . . . . . 28
4.4 Preoperative Checkout . . . . . 30

**5/Routine Maintenance** . . . . . 31
5.1 Preventive Maintenance . . . . . 31
A. Changing Soda Lime in Canisters . . . . . 31
B. Check Valve Maintenance . . . . . 32
C. APL (Adjustable Pressure Limiting) Valve Maintenance . . . . . 32
5.2 Cleaning . . . . . 32
A. Flowmeters . . . . . 32
B. Absorber . . . . . 32
C. Vaporizer . . . . . 33
D. Rubber Goods . . . . . 33
5.3 Sterilization . . . . . 33
A. General Procedures . . . . . 33
B. Rubber Goods . . . . . 34
C. Absorber and Check Valves . . . . . 34
D. Apparatus and Associated Components . . . 34
5.4 Field Repair/Service . . . . . 35
A. Regulators . . . . . 35
B. Flow Control Valves . . . . . 35
C. Flowmeters . . . . . 35
D. Inhalation and Exhalation Check Valves . . . 35
E. Vaporizer Funnel and Drain Plugs . . . . . 35
F. Non-Adjustable Relief Valve . . . . . 35
5.5 Repacking for Storage or Shipment . . . . . 36
5.6 Depot Repair/Service . . . . . 36
A. Vaporizer Service . . . . . 36
B. Sight Glass Replacement . . . . . 36
C. Complete Service and Cleaning . . . . . 39
D. Control Head Assembly Parts . . . . . 40
5.7 External Leak Test for the Vaporizer . . . . . 40
5.8 Flow Capacity Test for the Vaporizer . . . . . 42
5.9 Absorber Control Head Body Gasket Replacement . . . . . 43
5.10 Canister Gasket Replacement . . . . . 43

**6/Model 885A with an Ohmeda 5120 Oxygen Monitor** . . . . . 44
6.1 Description . . . . . 44
6.2 Unpacking . . . . . 44
6.3 Setup . . . . . 46
6.4 Checkout Using the Oxygen Monitor: Oxygen Flow Verification . . . . . 47
6.5 Routine Maintenance for the Oxygen Monitor . . . . . 47
6.6 Repacking for Storage . . . . . 47
6.7 Replaceable Parts . . . . . 47

**7/Parts Illustrations** . . . . . 48

**Warranty** . . . . . 57

# Table of Contents

## List of Illustrations


Figure 1: Apparatus Carrying Case with Glides Installed . . . . . 6
Figure 2: Upper Carrying Case, Lower Carrying Case . . . . . 6
Figure 3: Apparatus Assembled without Breathing Circuit, Cylinders, and Supply Hose . . . . . 7
Figure 4: Apparatus Assembled with Adult Rebreathing Circuit . . . . . 7
Figure 5: Lower Case with Apparatus Collapsed Within . . . . . 7
Figure 6: Upper Case with Stored Items and Components . . . . . 8
Figure 7: Pulling the Control Head Stand into an Upright Position . . . . . 9
Figure 8: Caster Location and Glide Removal . . . 9
Figure 9: Pulling the Control Head into an Upright Position . . . . . 10
Figure 10: Hinged Thumb Bolt . . . . . 10
Figure 11: Front View of Upright Control Head . . . . . 11
Figure 12: Compartments at Base of Control Head Stand . . . . . 12
Figure 13: Floor of Lower Case . . . . . 13
Figure 14: Supply Hose Connections for Small Cylinder Use . . . . . 15
Figure 15: Supply Hose Connections for Large Cylinder or Primary/Backup Use . . . . . 16
Figure 16: Adult Rebreathing Circuit . . . . . 17
Figure 17: Pediatric Partial Rebreathing Circuit . . . . . 19
Figure 18: Anesthetic Vaporizer . . . . . 20
Figure 19: Adult Rebreathing Circuit . . . . . 21
Figure 20: Pediatric Partial Rebreathing Circuit . . . . . 21
Figure 21: Flow Calculator, Solution to Example Problem I . . . . . 27
Figure 22: Flow Calculator, Solution to Example Problem II . . . . . 27
Figure 23: Anesthetic Vapor Pressure vs Temperature Chart . . . . . 29
Figure 24: Removing the Vaporizer from the Gas Machine . . . . . 37
Figure 25: Anesthetic Vaporizer Assembly . . . . 38
Figure 26: Site Glass Assembly . . . . . 38
Figure 27: Control Head Assembly . . . . . 41
Figure 28: External Leak Test . . . . . 41
Figure 29: Flow Capacity Test . . . . . 42
Figure 30: Opening the Hook and Loop Fastening Strap . . . . . 44
Figure 31: Removing the Monitor and Batteries . . . . . 44
Figure 32: Oxygen Monitor Mounting Bracket . . . . . 45
Figure 33: Sensing Cable Assembly and Sensing Tee . . . . . 45
Figure 34: Mounting the Oxygen Monitor Mounting Bracket . . . . . 46
Figure 35: Placing the Sensor Probe in the Tee . . . . . 46
Figure 36: Control Head . . . . . 48
Figure 37: Anesthetic Vaporizer, 0309-2002-800 . . . . . 49
Figure 38: Anesthetic Vaporizer, Detail for Figure 37 . . . . . 50
Figure 39: $O_2$ Regulator Assembly, 0306-1480-800 . . . . . 50
Figure 40: $N_2O$ Regulator Assembly, 0306-1481-800 . . . . . 51
Figure 41: Pressure Sensor Shutoff Valve, 0207-8277-801 . . . . . 52
Figure 42: Exploded View of Adjustable Pressure Limiting Valve (APL) . . . . . 52
Figure 43: Control Head . . . . . 53
Figure 44: Items Stored in Lower Case . . . . . 54
Figure 45: Items Stored in Upper Case . . . . . 55
Figure 46: Head Assembly, 0216-6057-801 . . . . 56


## List of Tables


Table 1 – Flowmeter Information . . . . . 5
Table 2 – Items Furnished and their Storage Locations . . . . . 14
Table 3 – Control and Indicators . . . . . 17
Table 4 – Recommended Sterilization Methods . 33


## User Responsibility

**CAUTION: Federal law in U.S.A. and Canada restricts these devices to sale by or on the order of a licensed medical practitioner.**

This Product will perform in conformity with the description thereof contained in this operation manual and accompanying labels and/or inserts, when assembled, operated, maintained and repaired in accordance with the instructions provided. This Product must be checked periodically. A defective Product should not be used. Parts that are broken, missing, plainly worn, distorted or contaminated, should be replaced immediately. Should such repair or replacement become necessary, Ohmeda recommends that a telephonic or written request for service advice be made to the nearest Ohmeda Regional Service Office. This Product or any of its parts should not be repaired other than in accordance with written instructions provided by Ohmeda, or altered without the prior written approval of Ohmeda's Safety Department. The user of this Product shall have the sole responsibility for any malfunction which results from improper use, faulty maintenance, improper repair, damage, or alteration by anyone other than Ohmeda.

Note: Storage Inspection Requirements – Inspection of units in storage should be performed at 30 month intervals. Use MIL-STD 105D for unit sample size. Follow the Preoperative Checkout Procedures in Section 4.

Note: Perform preventative maintenance for units in service quarterly (every 4 months). Follow the Preoperative Checkout Procedures in Section 4.

Note: Storage Inspection Rquirements – Inspection of units with oxygen monitor sensors should be performed at 12 month intervals. Use MIL-STD 105D for unit sample size. Follow the Preoperative Checkout Procedures in Section 4 for the Oxygen Monitor Check and the Oxygen Monitor Flow Ratio Checks.

# Precautions

Notice: As used in this manual, a WARNING indicates a potentially life threatening situation; a CAUTION indicates a condition that may lead to equipment damage or malfunction.

The following WARNINGS and CAUTIONS are used in various places throughout this manual to appropriately inform the reader of possible hazards and problems.

## Warnings

When raising the apparatus hold the control head securely, otherwise the apparatus will fall forward possibly pinching fingers and hands.

Never mix two or more agents in the vaporizer when filling or cleaning. The vapor delivered could have an adverse effect on the patient. Also, mixing of agents could result in an unpredictable vaporizer output. Always drain, then dry liquid agent from the vaporizer before adding another agent.

Never drain liquid anesthetic agent into an unmarked container. To prevent a serious accident, always drain the liquid into a container labelled for the same agent, e.g., drain a Halothane designated vaporizer into a Halothane anesthetic bottle, etc. with Ethrane and Forane.

Do not attempt to fill the vaporizer when in use. Close the "$O_2$ for Vaporizer" flow control valve, and turn the vaporizer control knob to the OFF position before removing the funnel plug.

Always make sure that a liquid level is visible. If an inadequate (less than 50 ml) amount of liquid agent is present, the desired vapor concentration may not be delivered.

Make sure the funnel plug sealing O-ring is in good condition and that the funnel plug is securely hand tightened. Any leaks from around the funnel plug can result in loss of vapor and gas to the atmosphere.

Do not turn the vaporizer control knob to the ON position until the flow of diluting gas has been set. *To do so might expose the patient to a lethal concentration of anesthetic agent vapor.*

The APL valve must be completely closed during use of the pediatric partial rebreathing circuit. The loss of patient gases may occur.

Leakage of gases and vapors to the atmosphere from the anesthesia apparatus circuits may deprive the patient of metabolic oxygen and anesthetic agent, and may pollute the atmosphere. It is important that tests to determine possible leakage be performed before each use of the apparatus, and that leakage be reduced to an acceptable level.

If the apparatus circuit does not conform to stated specifications, and the problem cannot be identified and repaired, do not use the apparatus.

Do not use the anesthesia apparatus after performing the leak test procedure until the vaporizer circuit has been purged with oxygen.

Proceed cautiously when using the flow calculator at elevations above sea level. The calculated FLOW THRU VERNI-TROL flow rate will provide higher concentrations of agent vapor in the total flow at elevations above sea level than at sea level. Use lower "oxygen for vaporizer" flow rates than calculated until experience has justified confidence in using higher flow rates.

Proceed cautiously when using the formula and Volatile Anesthetics Chart at elevations above sea level. The calculated flowmeter setting will provide higher concentrations of agent vapor in the total flow at elevations above sea level than at sea level. Use lower "oxygen for vaporizer" flow rates than calculated until experience has justified confidence in using higher flow rates. See Section 4.3.

Do not begin to use this anesthesia machine without verifying its correct operation and the correct operation of all associated equipment. Preoperative checkouts should be performed before each case and with the gas supplies that will be used for that specific case.

Do not use a damaged or malfunctioning anesthesia system, patient injury could result.

Ensure that there is proper ventilation for gas evacuation when performing the following check.

If the 5120 Oxygen Monitor fails the preceding initial checks do not attempt to use it. Remove the monitor from service and repair, calibrate and checkout the monitor as required to bring it up to published specifications.

Never oil or grease any anesthesia oxygen equipment unless the lubricant used is made and approved for this type of service. In general, oils and greases oxidize readily, and in the presence of oxygen, they will burn violently.

Cello-Seal* is the oxygen service lubricant recommended for the APL Valve.

Talc, zinc stearate, calcium carbonate, or corn starch which may have been used to prevent tackiness of rubber articles could contaminate a patient's respiratory tract.

Follow sterilization procedures carefully to avoid damage to components.

Do not steam sterilize the check valve discs. Steam sterilization could warp the discs and prevent the check valves from functioning properly.

Never oil or grease any anesthesia oxygen equipment unless the lubricant used is made and approved for this type of service. In general, oils and greases oxidize readily, and in the presence of oxygen, they will burn violently. Vac Kote* is the oxygen service lubricant recommended for use.

Never cover the anesthesia apparatus with any type of fabric or plastic covering. Removal of the cover may cause static electricity with the possibility of a resultant fire or explosion.

Do not operate the anesthesia apparatus if any flowmeter tube is broken. The anesthesia apparatus will not operate properly.

If the sight glass of the vaporizer is broken, the drained agent should be disposed of in a safe, environmentally acceptable manner.

* Cello-Seal is a trademark of Fisher Scientific. Ohmeda Stock No. 0220-5160-300.

* Vac Kote is a registered trademark of the Ball Corporation.

# Precautions

It is very important that all items be reassembled in the order that they were disassembled.

Do not attempt to disassemble the Control Head Knob-Assembly (see item 3, Figure 27). This assembly requires special and intricate alignment procedures.

Improper orientation and alignment of parts during reassembly will render the vaporizer dangerous to patients if it is used.

Do not use the vaporizer without verifying its correct operation. This test should be performed when ever the vaporizer has been disassembled or repaired.

Do not use a damaged or malfunctioning vaporizer.

Scotch-Grip* 3M High Performance Contact Adhesive 1357 is extremely flammable. Vapors may ignite explosively and cause flash fire. Vapors are harmful. Use only with cross-ventilation.

## Cautions

When using Pre-Pak* factory prefilled absorbant cartridges, remove the screens from the base of the canisters, otherwise the resistance in the patient breathing circuit may be too high.

All seals should be in place whenever the machine is not in use. This will help prevent contamination of internal parts.

Use only one cylinder gasket per yoke. Use of more than one gasket could cause cylinder gas leakage and improper engagement with the safety index pins.

Do not overtighten the clamp screw under the absorber crossbar. Overtightening could cause canisters to warp resulting in gas leakage.

No repair should ever be undertaken or attempted by anyone not having experience repairing devices of this nature.

Do not allow the gauge pressure to build beyond the maximum on the gauge scale. Damage to the gauge could occur.

Do not depress the $O_2$ Flush Valve button while the vaporizer output is occluded. Damage to the gauge could occur.

Always open cylinder valves *slowly* to avoid damaging the regulators.

Before connecting the absorber to each patient make sure that the remaining capacity of the soda lime is adequate for the case at hand judged by the color position at the end of last use. Color recedes during rest, making estimate after rest unreliable.

Do not obstruct the air vent in the knob of the APL valve. This vent helps prevent a pump action from developing in the spring sleeve when gas is flowing rapidly past the diaphragm. If the valve begins to chatter or vibrate, lubricate the outside of the spring sleeve with a light film of Cello-Seal*.

Following sterilization with ethylene oxide, parts should be quarantined in a well ventilated area to allow dissipation of residual ethylene oxide gas absorbed by the rubber and plastic. In some cases, aeration period of seven days or more may be required. Aeration time can be decreased when special aeration devices are used. Follow manufacturer's recommendations for specific aeration periods required.

Do not cold sterilize the gauge or the APL valve. A residue will be left both in the gauge mechanism and in the valve internal components and this residue may affect proper operation of these devices.

Do not steam sterilize the anesthesia apparatus. High temperatures and residual water condensate may be detrimental to particular components.

Do not use organic based thread sealants on any portion of the oxygen regulator. Use only teflon thread-sealing tape or thread compound, Anti-seize and Sealing, Oxygen Systems, 4 oz. Tube, NSN 8030-00-243-3284.

Do not move the Control Knob from the ON position. This alignment is vital for proper reassembly.

* Scotch-Grip is a registered trademark of Adhesives, Coating and Sealers Division/3M.

* Pre-Pak is a registered trademark of W.R. Grace & Co.

* Cello-Seal is a trademark of Fisher Scientific. Ohmeda Stock No. 0220-5160-300.

# 1/Specifications

**Closed Carrying Case Dimensions:**

13" wide, 20" long, 18" high (4680 cubic inches)

**Weight in shipping container:**

115 lbs.

**Weight without shipping container:**

86 lbs.

**Vaporizer Liquid Anesthetic Agent Capacity:**

maximum, 250 mL

**Vaporizer Thermometer:**

0 to 50°C range with ± 1°C accuracy

**Breathing Circuit Pressure Range:**

dual calibrated from –10 to 70 mm Hg and –20 to +100 cm $H_2O$ with ±0.5 mm Hg accuracy

**Oxygen Flush Valve:**

depressing pushbutton allows a minimum oxygen flow of 40 LPM

**Regulator Outlet Pressure Setting:**

40 psig nominal

**Pressure Sensor Shutoff Valve:**

shuts off nitrous oxide flow when pressure of oxygen in the circuit drops to approximately 20 psig

**Gas Evacuator/Relief Valve:**

range 2 to 70 mm Hg

**Non-Adjustable Relief Valve:**

opens between 60 and 80 mm Hg

**Absorber Canister:**

holds 2.5 – 3 lbs. of soda lime (bulk or prepackaged)

**$O_2$ Cylinder Regulator Assembly:**

40 psig regulator; gauge is calibrated from 0 to 3000 psi; white with green symbol coded tee handle

**$N_2O$ Cylinder Regulator Assembly:**

40 psig regulator; gauge is calibrated from 0 to 3000 psi; blue with white symbol coded tee handle

**Gas Supply Hoses:**

two 114" long hoses, two 40" long hoses; all supply hoses have color coded identification disc, oxygen discs are white with silver characters; nitrous oxide discs are blue with silver characters

**Case Relief Valve:**

nominal relief pressure rating of 1.5 psig

**885A Anesthesia Apparatus Environmental Charateristics:**

Operating Temperature: +5°C to +40°C (41°F to 104°F)

Storage Temperature : –28°C to +54°C (–20°F to 130°F)

Long Term Storage Temperature: –28°C to +54°C (–20°F to 130°F)

Note: To maximize the oxygen monitor sensor's shelf life, when refrigeration is not available (as noted in the 5120 Oxygen Monitor Operation and Maintenance Manual Ohmeda Stock No. 0178-1757-000) the sensor should be stored in a clean and dry environment at:
Temperature: +20°C (68°F) ±2°C
Humidity: 55% ± 5%

**5120 Oxygen Monitor Characteristics:**

Operating Temperature Range: +5°C to +40°C (41°F to 104°F)

Temperature Compensation Range: +15°C to + 40°C (59°F to 104°F)

Sensor Life: 12 months, typical; assumes average % $O_2$ equal to 50% at +25°C (+77°F).

**Table 1 – Flowmeter Information**

| Flowmeters | Nitrous Oxide | Oxygen for Vaporizer Low Flow | Oxygen for Vaporizer High Flow | Metabolic Oxygen |
|---|---|---|---|---|
| **Range** | 0.2 to 8 LPM | 20 to 180 cc/min | 100 to 1000 cc/min | 0.2 to 7 LPM |
| **Accuracy** | The accuracy of all flowmeters is ±20% up to flows of 1000 cc/min and ±10% above flows of 1000 cc/min. | | | |
| **Color of Scale** | Blue background with white characters | Yellow background with black characters | | White background with green characters |
| **Color of Flow Control Knob** | Blue background with silver characters | Black background with white characters | | White background with silver characters |

# 2/Description

## 2.1 General

The Model 885A Anesthesia Apparatus is contained within a 13" × 20" × 18" carrying case and, when assembled, provides all the minimum essentials for administration of anesthesia by adult rebreathing and pediatric partial rebreathing techniques (tracheal equipment and expendable supplies are not included). The apparatus is designed for field use and accommodates large (M and G size) and small (D and E size) cylinder gas supplies.

Note: Push the Pressure Relief Button prior to opening case. See Figure 1.

Note: Cylinders (oxygen and nitrous oxide) are not supplied with the 885A Anesthesia Apparatus.

The carrying case consists of two sections: the upper case (smaller) and the lower case (larger).

The upper case is secured to the lower case by four draw bolts (see Figures 1 and 2). It contains cylinder regulator assemblies, supply hoses, and other breathing circuit items necessary for use of the apparatus (see Figures 3 and 4). When the anesthesia apparatus is assembled and being used, the upper case can serve as a stool for the anesthetist.

The lower case has a carrying handle on each end and sockets in the bottom for either glides or casters. Depending on which is being used, either the set of four glides or the set of four casters are retained within the lower case. The apparatus stand, control head, absorber, vaporizer, cylinder adapters, and other necessary items are also stored within the lower case.

The following sections provide descriptions of the items and components which comprise the Model 885A Anesthesia Apparatus. Some preliminary unpacking and setup instructions are included in these sections so that an item or component may be viewed while its description is being read. Other than following these preliminary instructions, read the description sections before further setup or operation is attempted.

The schematics from page 21 may be a helpful reference when reading this manual.

A summary of items furnished and their storage locations within the carrying case is provided on page 14.

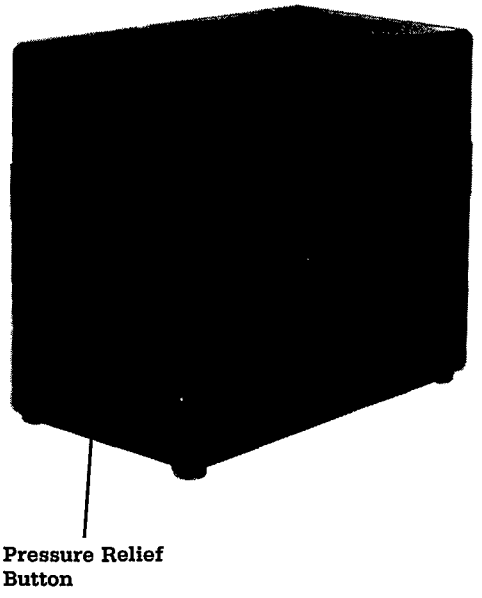


**Figure 1**
Apparatus Carrying Case with Glides Installed

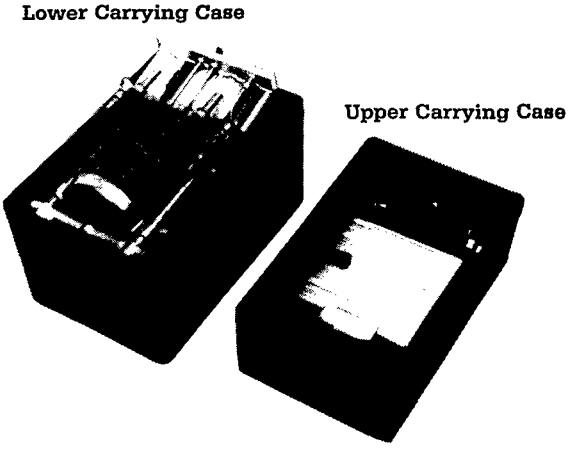


**Figure 2**
Upper Carrying Case, Lower Carrying Case

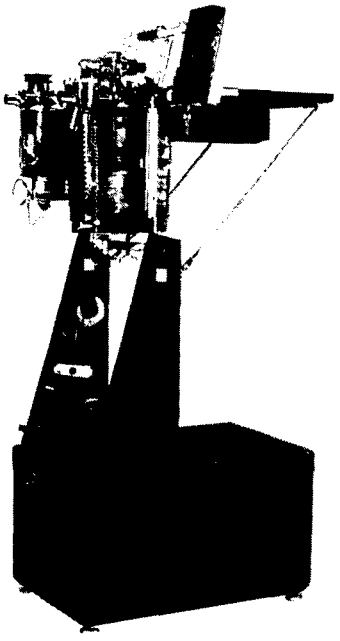

**Figure 3**
Apparatus Assembled without Breathing Circuit, Cylinders, and Supply Hose

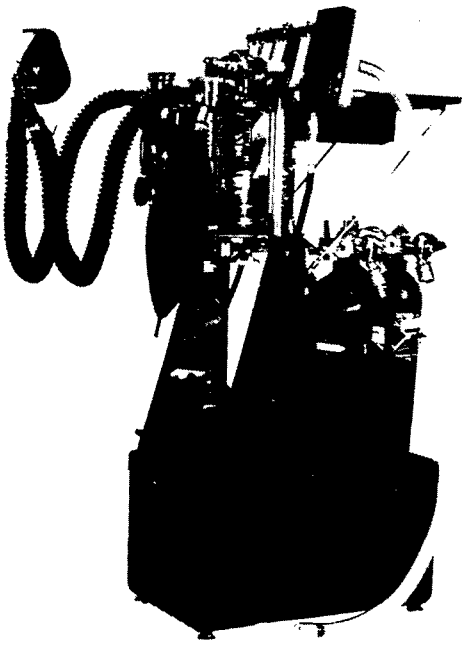

**Figure 4**
Apparatus Assembled with Adult Rebreathing Circuit, Small Cylinders, and Short Supply Hoses

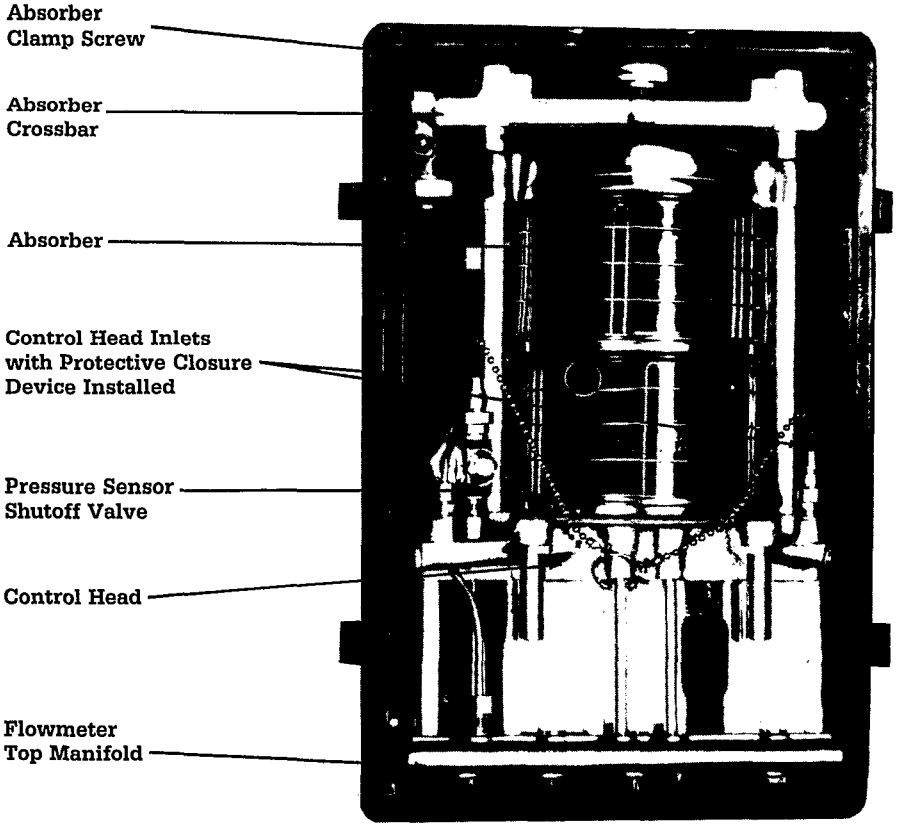


**Figure 5**
Lower Case with Apparatus Collapsed Within

## 2.2 Items and Components

**A. Gas Supply Equipment**

To view the components described in the following paragraphs, release the draw bolts holding the upper and lower cases together and carefully place the upper case on its back as shown in Figure 2.

1. **Cylinder Adapters:** One oxygen and one nitrous oxide cylinder adapter are stored on threaded posts anchored to the inside bottom of the lower case (see Figure 12). The adapters provide a means for mounting yoke-type regulator assemblies to threaded outlet cylinder valves. Cylinder adapters have nut and gland coded inlet connections and pin indexed outlet connections. These features help prevent accidental interchange of the connections (e.g., an oxygen cylinder adapter inlet will not fit a nitrous oxide cylinder outlet, nor will an oxygen cylinder adapter outlet fit a nitrous oxide regulator assembly inlet).
2. **Cylinder Regulator Assemblies:** Four cylinder regulator assemblies are provided: two for oxygen and two for nitrous oxide. All four regulator assemblies are stored in the upper case where they are held securely by latched retainer panels (see Figure 6). Each regulator assembly has a yoke-type, pin indexed inlet which attaches to a post-type, pin indexed cylinder valve, or to the outlet of a pin indexed cylinder adapter. Pin indexing helps prevent the accidental interchange of connections between the cylinders or cylinder adapters and the regulator assembly inlets.

   Each regulator assembly also has a cylinder pressure gauge, a relief valve, and a quick connect outlet adapter with an integral check valve. The quick connect outlet adapters are keyed to help prevent accidental interchange of the regulator assembly outlets and the supply hose inlets.
3. **Gas Supply Hoses:** Four conductive rubber gas supply hoses with a fabric reinforced core are stored in the upper case (see Figure 6). There are two long (114") and two short (40") hoses; one each for both oxygen and nitrous oxide delivery. The long hoses are wrapped around the upper case center storage compartment; the short hoses are stored within the compartment.

   To gain access to the hoses, unlatch the hinged lid of the storage compartment.

   Each hose has a keyed quick connect male inlet adapter, and a keyed quick connect female outlet adapter with an integral check valve. Supply hose inlets will fit only the regulator assembly outlets for which they are intended; supply hose outlets will fit only the control head inlets for which they are intended. This keying system helps prevent the cross connections of oxygen and nitrous oxide supply hoses.

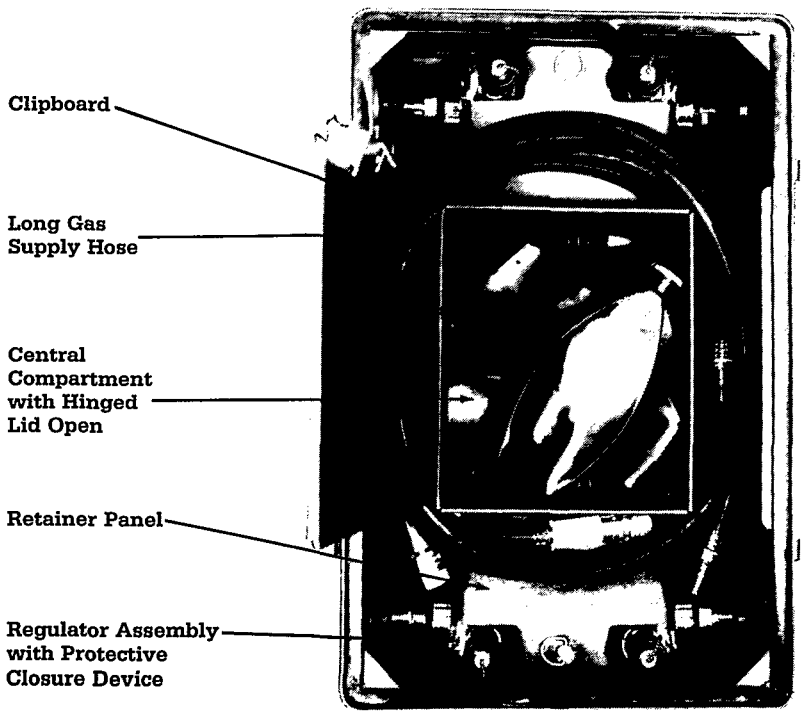


**Figure 6**
Upper Case with Stored Items and Components

### B. Control Head

**See Figures 5 and 11**

The control head and its stand collapse within the lower carrying case. The items and components described in the following sections comprise the control head. When resting within the lower carrying case, the back of the control head faces upward.

**See Figure 5**

1. **Gas Inlet Connections:** The control head gas inlet adapters for oxygen and nitrous oxide are compatible with their respective supply hose outlets. The inlet adapters are located behind the flowmeters, on the lower control head body.

**See Figure 5**

2. **Pressure Sensor Shutoff Valve:** The pressure sensor shutoff valve is located directly above the nitrous oxide inlet adapter. It is diaphragm operated, normally closed valve, which is located in the delivery circuit; so, when the oxygen cylinder pressure decreases to 30 psig the valve begins to close. As the valve closes, the nitrous oxide flow is restricted. In the event of an oxygen supply failure (cylinder pressure falling to approximately 20 psig) nitrous oxide flow will be completely shut off.

   To view the components described in the following paragraphs, it will be necessary to lift the control head and its stand out of the lower case. To accomplish this, do the following:

a. Pull the absorber crossbar upward until the support arms lock in an upright position (see Figure 7).

Note: Before proceeding verify the support arms are in the locked position.

b. Depending on desired use, remove the set of four casters or the set of four glides from the retaining clips on the floor of the lower case (see Figure 8A). Carefully place the apparatus on its side and remove either four glides or four casters from the bottom of the lower case (see Figure 8B). Install the set to be used, and place the unit upright. Using the sight level make sure the unit is level (see Figure 12). Replace the unused set in the retaining clips.
c. Unsnap the short strap which secures the flowmeter top manifold to the lower case.
d. Grasp the flowmeter top manifold and pull upward until the control head is upright and aligned with the support arm. Do not release a tight hold on the control head until the hinged thumb bolt, at the end of the cross bar, is locked into the slot in the left support arm and tightened (see Figure 10).

Note: References to the left, right, front or back of the apparatus are made with respect to the upright control head; that is, the front refers to the side of the apparatus where the flowmeter panel can be viewed (see Figure 11).

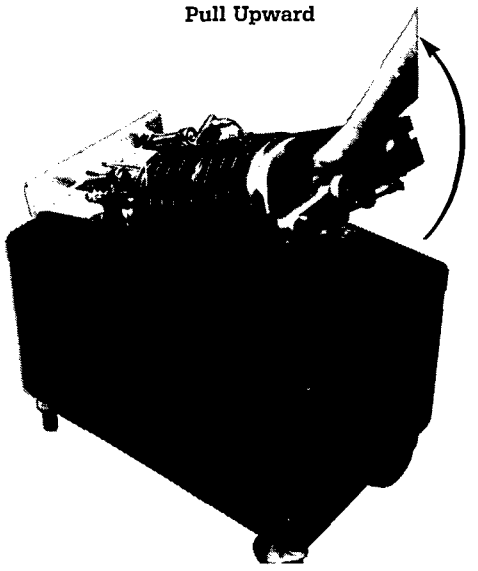


**Figure 7**
Pulling the Control Head Stand into an Upright Position

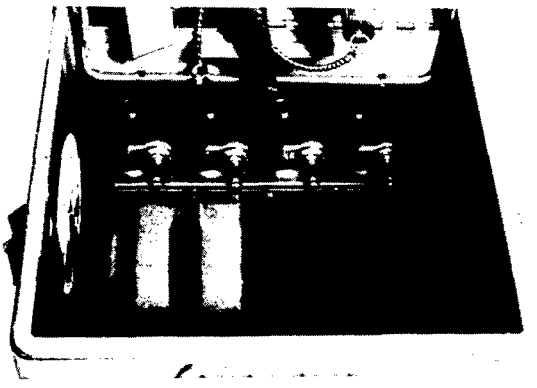

**A. Casters Held by Retaining Clips on Floor of Lower Case**

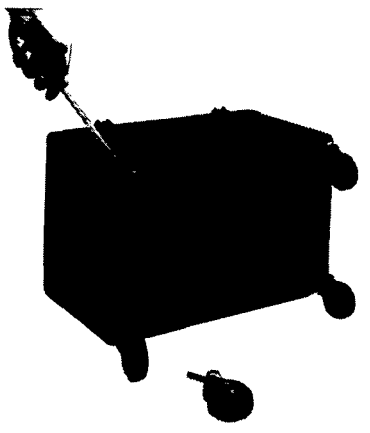

**B. Removing Glides to Replace with Casters**

**Figure 8**
Caster Location and Glide Removal

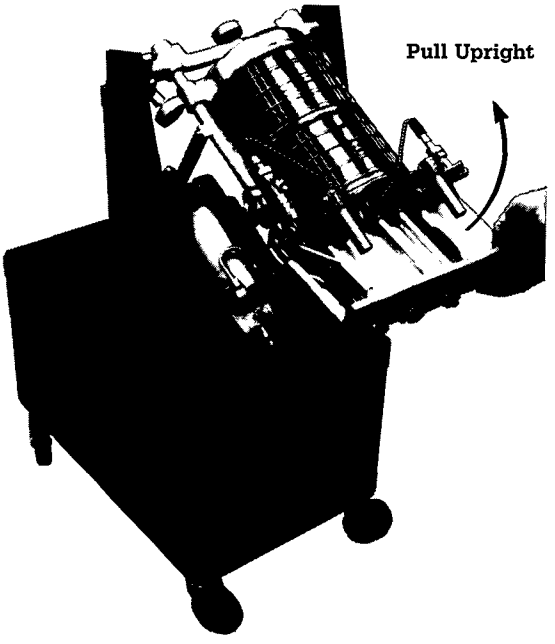


**Figure 9**
Pulling the Control Head into an Upright Position

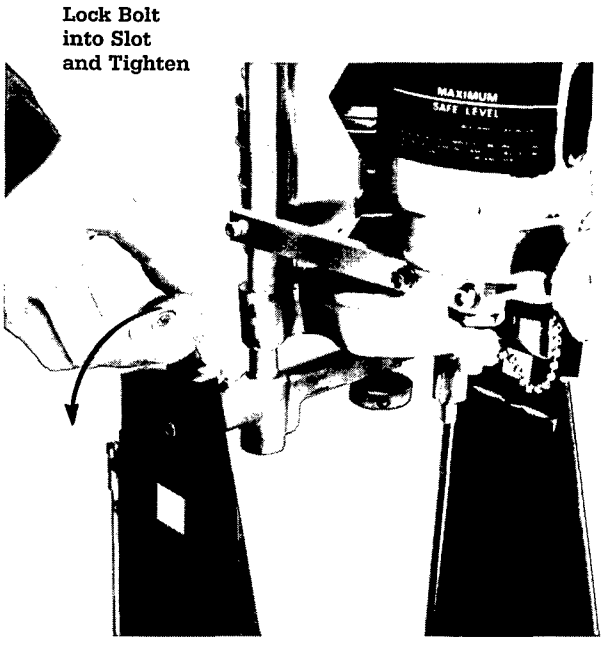


**Figure 10**
Hinged Thumb Bolt

**See Figure 11**

3. **Flowmeters and Flow Control Valves:** The panel of flowmeters extends across the top of the control head. One variable area type flow tube each is provided for metering metabolic oxygen and nitrous oxide. Two series connected flow tubes are located in the center position for metering oxygen flow for the vaporizer. A transparent plastic shield helps to protect the flowmeters from damage.

   The flow control valves are found directly under their respective flowmeters. Flowmeter scales and flow control valve knobs are color and symbol coded for each metered gas (color coding is described in Specifications Section on page 5). The metabolic oxygen flow control valve knob is touch coded (fluted) for non-visual identification. Positive stops at the flow control valve closed position helps prevent excessive wear on sealing surfaces. The two vaporizer oxygen flowmeters have a single flow control valve.

   Flowmeter tubes have large ball floats which are easily visible against the scale background. Flow ranges are given in the Specifications Section on Page 5.

**See Figure 11, item 2**

4. **Oxygen Flush:** The direct flow, self-closing, oxygen flush pushbutton is located directly below the oxygen-for-vaporizer high flow flowmeter. The pushbutton controls a valve which, when open (pushed in) supplies oxygen at a minimum rate of 40 LPM in addition to the total flow of the metered gases.

**See Figure 11, item 9**

5. **Non-Adjustable Pressure Relief Valve:** The non-adjustable pressure relief valve is built into the control head body. It limits the maximum pressure which can be supplied to the patient. If the circuit pressure exceeds 60-80 mm Hg the valve relieves (opens) and vents gases to the atmosphere.

**See Figure 5**

6. **Absorber:** The absorber is an integral part of the control head and is located under the control head body. It has two plastic canisters which will hold either bulk or prepackaged soda lime (3 lb. charges). The canisters are covered by anti-static, cylindrical, metal grid shields, and fit tightly, one on top of the other, between the control head body and the absorber base. When the clamp screw in the absorber crossbar is turned clockwise, the base of the absorber is lowered and the canisters can be removed.

**CAUTION: When using Pre-Pak* factory prefilled absorbant cartridges, remove the screens from the base of the canisters, otherwise the resistance in the patient breathing circuit may be too high.**

Note: The two lengths of gas evacuation tubing are stored in the absorber canisters.

There is a condensate reservoir with a drain spigot in the absorber base. The reservoir is emptied by turning the knurled knob on the drain spigot clockwise (as viewed from the top of the machine).

A short corrugated rubber tube, located at the front of the absorber, carries circulating gas from the absorber base to the inhalation check valve.

* Pre-Pak is a registered trademark of W.R. Grace & Co.

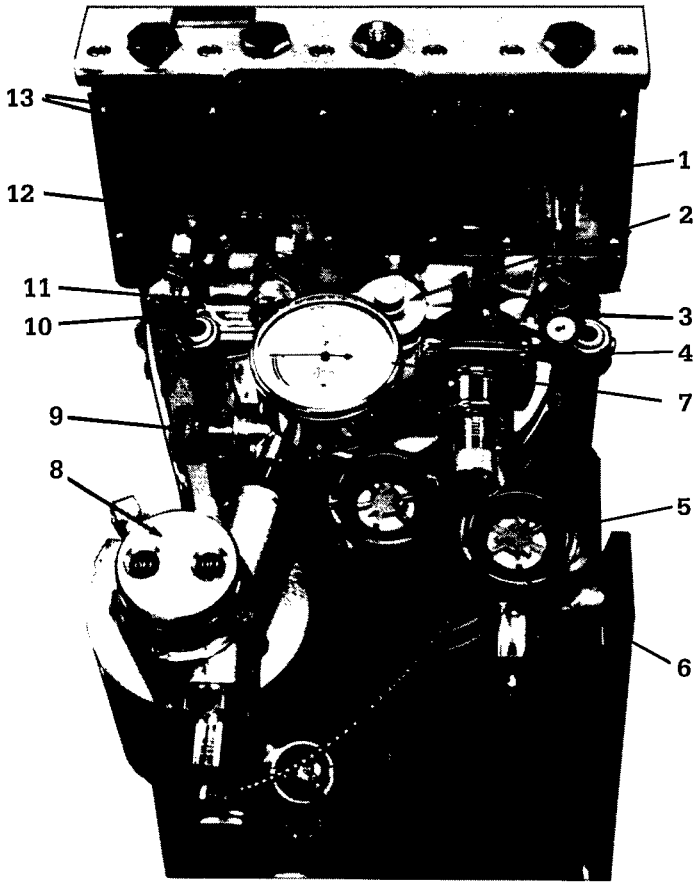


**Description**

1. $O_2$ Flowmeter (Metabolic)
2. $O_2$ Flush Valve
3. $O_2$ Flow Control Valve
4. APL (Adjustable Pressure Limiting)
5. Exhalation Check Valve
6. Inhalation Check Valve
7. Breathing Circuit Pressure Gauge
8. Anesthetic Vaporizer
9. Pressure Relief Valve (Non-Adjustable)
10. $N_2O$ Flow Control Valve
11. $O_2$ for Vaporizer Flow Control Valve
12. $N_2O$ Flowmeter
13. Vaporizer Oxygen Flowmeters

**Figure 11**
Front View of Upright Control Head

**See Figure 11, items 5 and 6**

7. **Inhalation and Exhalation Check Valves:** The inhalation and exhalation check valves control the direction of gas flow in the patient breathing circuit. They extend from the front of the control head body. Transparent windows permit the operator to observe that the valves are operating properly.

**See Figure 11, item 7**

8. **Breathing Circuit Pressure Gauge:** The breathing circuit pressure gauge is located on top of the control head body. The gauge monitors pressure in the patient breathing circuit and is also used to establish the desired pressure adjustment of the APL valve.

**See Figure 11, item 4**

9. **APL/Adjustable Pressure Limiting Valve:** The APL valve is located on top of the control head body. It is a valve which will relieve (open) when the set patient breathing circuit pressure is exceeded.

   A knurled control knob adjusts an internal spring loaded diaphragm, allowing a pressure setting range of 2 to 70 mm Hg (+3 to +100 cm $H_2O$), and a fully closed position. Since the control knob is non-calibrated, pressure setting adjustments are made by observing the breathing circuit pressure gauge readings. The Operation Sections describes this procedure in more detail.

**See Figure 11, item 8**

10. **Anesthetic Vaporizer:** The anesthetic vaporizer extends from the front of the control head body. It is equipped with an ON-OFF control knob, a filling funnel with a captive funnel plug, a liquid level indicator, a dial-type thermometer (°C), and a drain spigot. The vaporizer's brass container minimizes heat loss due to vaporization.

    The purpose of the vaporizer is to provide concentrations of anesthetic agent vapor in the vehicle oxygen.

    The Flow Calculator allows the operator to determine required setting for the "oxygen for vaporizer" flowmeter to produce the desired concentration of anesthetic agent vapor within a given total flow of gases (a detailed explanation of calculator use is given in the Operation Section).

    The calculator is stored in the lower case and is retained there by a hook-and-loop fastener (see Figure 13).

**C. Breathing Circuit Items**

1. **Breathing Tubes and Fittings:** Two long (32") corrugated, conductive rubber breathing tubes and a Y-connector are provided. The tubes are stored in the central compartment of the upper carrying case; the Y-connector is stored in the latched compartment at the base of the control head stand (see Figure 12). The two 22 mm male taper limbs of the Y-connector fit the 22 mm bushings of the long breathing tubes. These items are used in the adult rebreathing circuit.

   Tubing for the pediatric partial rebreathing circuit is also stored in the upper case central compartment and includes: a short (12") corrugated conductive rubber breathing tube with a 15 mm male taper connector at one end and a 15 mm female taper connector at the other, and a pediatric supply hose with a 15 mm female taper connector at one end and a tee connector at the other.

2. **Breathing Bags and Fittings:** Two breathing bags are stored in the upper case central compartment. The large 3 liter bag is for adult use. The small 1 liter bag is for pediatric use and has a 15 mm female taper connector at one end, and a scavenging vent valve at the other end.

3. Masks and Fittings: Five face masks are stored on posts in the uncovered compartment at the base of the control head stand (see Figure 12). There is one mask each in newborn, infant, child, medium adult, and large adult sizes. Both adult masks have inflatable cushions so that when they are properly inflated the masks will fit securely against the contours of a patient's face.

Each mask has a 22 mm bushing for the mask elbow. The other end of the mask elbow (15 mm male) will fit:

a. the pediatric tee female connector
b. the short breathing tube female connector
c. the pediatric breathing bag female connector or
d. the adult circuit Y-connector.

Placement of the mask elbow will depend on the breathing circuit being used. When not in use, the Y-connector is stored in the covered compartment at the base of the control head stand.

Each adult mask has a four-hook ring around the 22 mm bushing. The hooks are used to retain the mask. One conductive rubber head strap is stored in the upper case central compartment. The strap has four perforated legs which fasten to the four hooks on the mask.

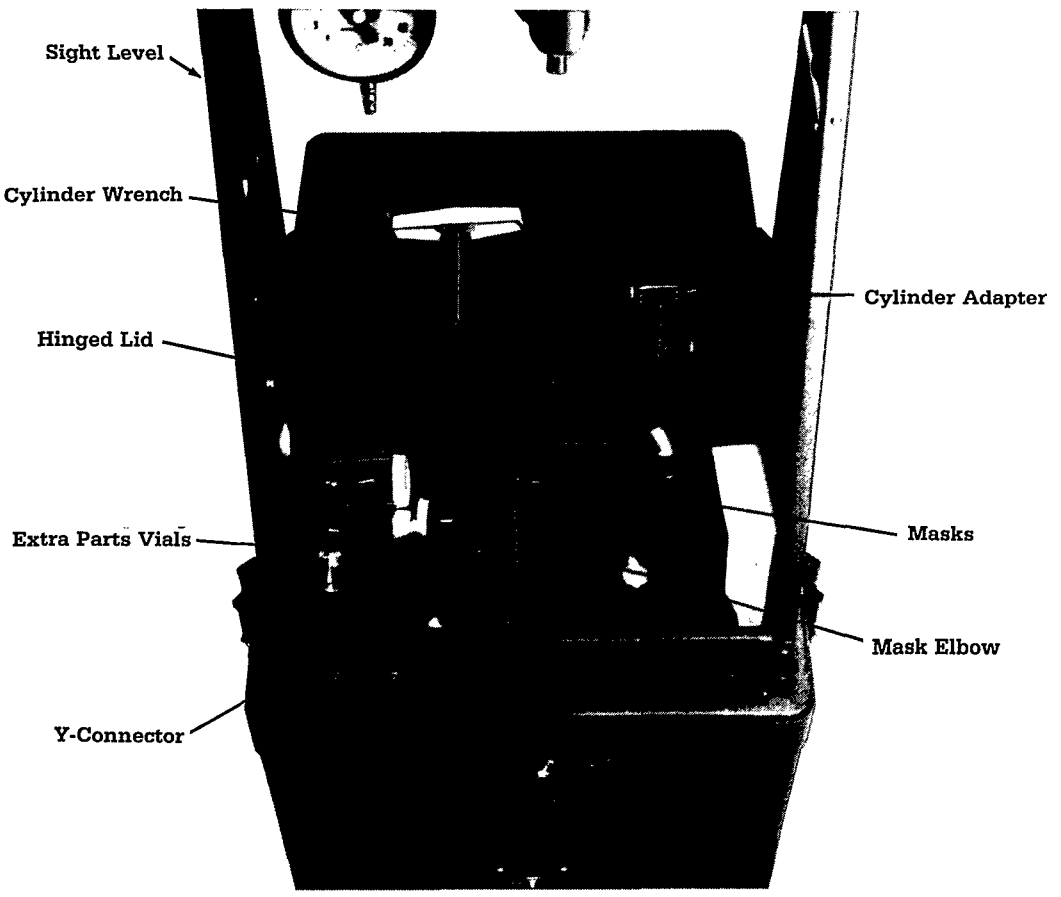


**Figure 12**
Compartments at Base of Control Head Stand

### D. Additional Items

1. **Instrument Tray and Cylinder Holder:** An instrument tray and cylinder holder are stored on the floor of the lower case and are retained by a hook-and-loop strap (see Figure 13). The cylinder holder is nested within the instrument tray. Assembly of both items is described in the Setup Section.

2. **Clipboard:** A clipboard is stored in the upper case. It is clipped on the hinged lid of the central compartment (see Figure 6). The clipboard may be hung on the assembled apparatus by fitting the tab on the back of the clip into the holes provided in both the left and right support arms.

3. **Tools:** Two double, open-end wrenches (1 5/16" – 1⅛", ⅞" – ¾") are retained by a swivel clip on the inside of the left support arm.

   A 3/16" hex wrench and a cylinder valve wrench are stored in the covered compartment at the base of the control head stand.

4. **Extra Replacement parts:** Three vials containing replacement parts are stored in the covered compartment at the base of the control head stand. The large vial contains vaporizer replacement parts, the medium vial, cylinder yoke gaskets, and the small vial, replacement inhalation and exhalation check valve discs.

   An absorber replacement gasket is retained on the inside of the right support arm.

### E. Protective Closure Devices

Protective closure devices protect openings in the anesthesia apparatus from contamination by foreign material (dust, dirt, etc.) when the apparatus is stored or otherwise not in use. It is particularly important that the devices are securely in place when the apparatus is being transported. There are four types of protective closure devices. The following describes each type and where they are used.

1. Rubber capped blind Schraeder glands are used to seal each of the four regulator assembly outlets. The blind gland locks into place. These devices are retained on each regulator assembly by a key ring snap and bead chain (see Figure 6).

2. Small plastic cap plugs are used to seal the outlets of the two cylinder adapters. These devices are retained on each adapter by a wire hook and bead chain (see Figure 13).

3. Rubber stoppers are used to seal the opening of the vaporizer and the openings of the exhalation check valve. These devices are retained by bead chain which is wrapped around the neck of the exhalation check valve.

4. Rubber cap are used to seal the control head gas inlet connections. These devices are retained behind the control head by a key ring snap and bead chain (see Figure 5).

**CAUTION: All seals should be in place whenever the machine is not in use. This will help prevent contamination of internal parts.**

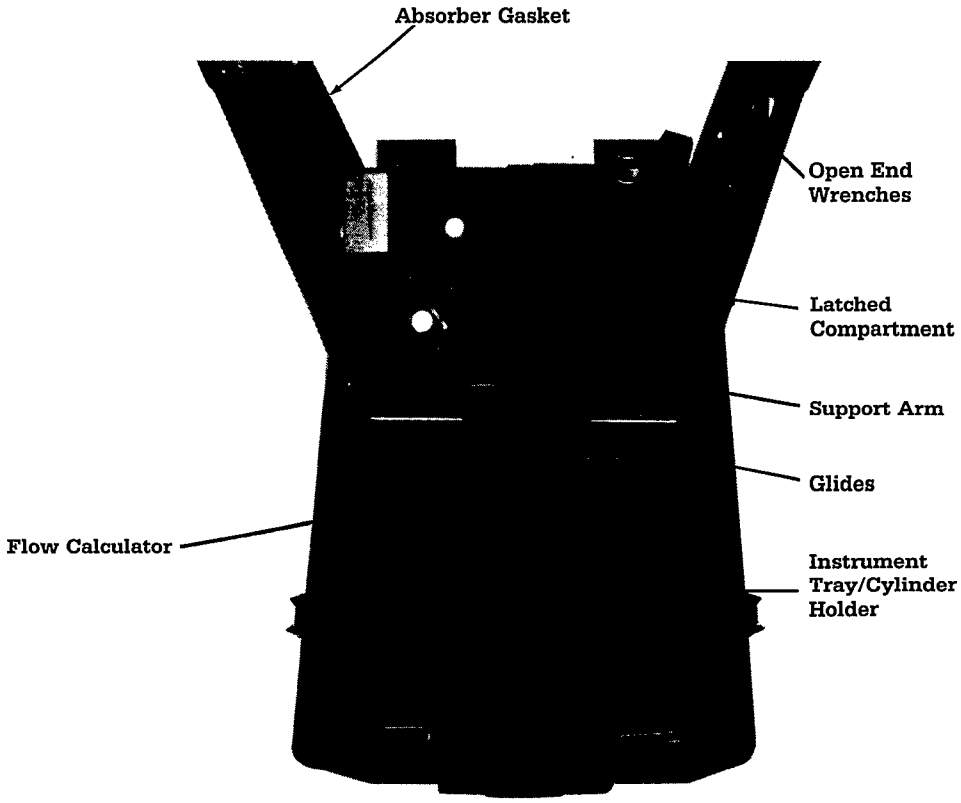


**Figure 13**
Floor of Lower Case

**Table 2 – Items Furnished and Their Storage Locations**

**Items Furnished and their Storage Locations (See Figures 6, 12, and 13)**

Note: The Parts Illustrations Section starting on page 48 provides additional views of items furnished and also lists Stock Numbers.

| Upper Case | Location |
|---|---|
| Cylinder Regulator Assemblies<br>• Oxygen (2)<br>• Nitrous Oxide (2) | Retained by hinged panels with ring and groove latches |
| Gas Supply Hoses<br>• Oxygen, long 114" (1)<br>• Nitrous Oxide, long 114" (1)<br>• Oxygen, short 40" (1)<br>• Nitrous Oxide short 40" (1) | • Long hoses wrapped around center storage compartment<br>• Short hoses wrapped inside center storage compartment |
| Long Breathing Tubes (2) | Inside center storage compartment |
| Short Breathing Tube with connectors (1) | Inside center storage compartment |
| Pediatric Supply Hose with connector and tee | Inside center storage compartment |
| Breathing Bags<br>• Large (3 liter) (1)<br>• Small (1 liter) with connectors and gas scavenging vent valve (1) | Inside center storage compartment |
| Head strap (1) | Inside center storage compartment |
| Clipboard (1) | Clipped to back of center storage compartment hinged lid |
| Protective Closure Devices:<br>• for regulators (4)<br>• for cylinder adapters (4)<br>• for vaporizer and exhalation check valve openings (3)<br>• for gas inlets (2) | Protective closure devices are found with the respective items they protect |

| Lower Case | Location |
|---|---|
| Casters or Glides | Held by retaining bar on floor of case |
| Cylinder Adapters<br>• Oxygen (1)<br>• Nitrous Oxide (1) | Threaded onto posts anchored to floor of case |
| Masks<br>• Large Adult (1)<br>• Medium Adult (1)<br>• Child (1)<br>• Infant (1)<br>• Newborn (1) | Held on posts at base of control head stand |
| Y-Connector (1) | In latched compartment at base of control head stand |
| Mask elbow (1) | In latched compartment at base of control head stand |
| Replacement Parts Vials (3)<br>• Large (1) with vaporizer replacement parts<br>• Medium (1) with cylinder yoke gaskets<br>• Small (1) with check valve discs | In latched compartment at base of control head stand |
| Cylinder Valve Wrench (1) and Hex Wrench 3/16" (1) | In latched compartment at base of control head stand |
| Instrument Tray | On case floor held by hook-and-loop strap |
| Cylinder Holder | On case floor nested within Instrument Tray held by hook-and-loop strap |
| Level | Inside right support arm |
| Double open end wrenches (2)<br>1 5/16" – 1⅛ (1)<br>⅞" – ¾" (1) | Retained by clip on inside left support arm |
| Absorber Gasket Replacement (1) | Retained by tape on inside right support arm |
| Flow Calculator (1) | Retained by hook-and-loop fastener on right inside case wall |
| Gas Scavenging Tubes (2) | One inside each absorber canister |

# 3/Setup

## 3.1 General

Note: Remove the protective closure devices from items to be used in the setup.

When the unit is received in the field, an overall inspection should be made. Use the "List of Items Furnished" chart on Page 14 to do an inventory, making sure that each item is supplied and in good condition. Although some preliminary setup instructions were given earlier, the following will provide the complete set of initial setup instructions.

1. Separate the upper case from the lower case by releasing the draw bolts holding the upper case and lower case together. Carefully place the upper case on its back. See Figure 2.
2. Pull the absorber crossbar upward (following an arc) until the support arms lock in an upright position (see Figure 7).

   Note: Before proceeding verify the support arms are in the locked position.
3. Depending on the desired use, remove the set of four casters or the set of four glides from the retaining clips on the floor of the lower case (See Figures 8 and 13). Carefully place the apparatus on its side and remove either four glides or four casters from the bottom of the lower case (See Figure 8B). Install the set to be used, and place the unit upright. Using the sight level make sure the unit is level. Replace the unused set in the retaining clips.
4. Unsnap the short strap which secures the flowmeter top manifold to the lower case.
5. Grasp the flowmeter top manifold and pull upward (following an arc), until the control head is upright and aligned with the support arms. Do not release a tight hold on the control head until the hinged thumb bolt, at the end of the cross bar is locked into the slot in the left support arm and tightened.

**WARNING: When raising the apparatus hold the control head securely, otherwise the apparatus will fall forward possibly pinching fingers and hands.**

a. Detach the hook-and-loop strap on the floor of the lower case and lift out the instrument tray (See Figure 13). Remove the cylinder holder nested within the instrument tray.
b. If large cylinders are to be used, unscrew the cylinder adapters from the posts anchored to the floor of the lower case.

6. Place the sockets of the instrument tray over the short posts at the back of the control head. Lift the U-bracket, hinged to the back of the support arms and engage it with the clips under the edge of the instrument tray. See Figure 3.
7. Open the upper case center storage compartment. Remove the short gas supply hoses if small cylinders are to be used. If large gas cylinders are to be used, remove the two large gas supply hoses (See Figure 6).
8. Open the retaining panels and remove the regulator assemblies.
9. Engage the tabs on the underside of the cylinder holder with the back flanged edge of the lower case rim. Lock the latch to the bracket at the base of the control head stand.

a. If small cylinders are used, place the oxygen cylinders in the holes on the left side of the holder (as viewed from the back of the unit). Place the nitrous oxide cylinders in the holes on the right. Cylinder positions will correspond to their respective flowmeter positions. Use the cylinder valve wrench, found in the storage compartment at the base of the support stand, to slowly open the cylinder valve. Leave it open momentarily, then close the valve. This will blow foreign matter from the cylinder outlet.
b. If large cylinders of oxygen and nitrous oxide are used, use the cylinder wrench found in the storage compartment at the base of the support stand to slowly open the cylinder valve. Leave it open momentarily then close the valve. This will blow foreign matter from the cylinder outlet. Attach the appropriate nut and gland coded cylinder adapter inlet to each cylinder outlet using the large open end wrench (1⅛"). Slowly open the cylinder valve, leave it open momentarily, then close the valve. This will blow foreign matter from the adapter outlet. See Figure 15.

10. To mount a regulator assembly on a small cylinder: Make sure a single fresh gasket is in place on the regulator inlet nipple, and that the pin indexing of the regulator assembly matches the cylinder. Tighten the regulator assembly onto the cylinder valve. Make sure that the gauge is visible. See Figure 14.

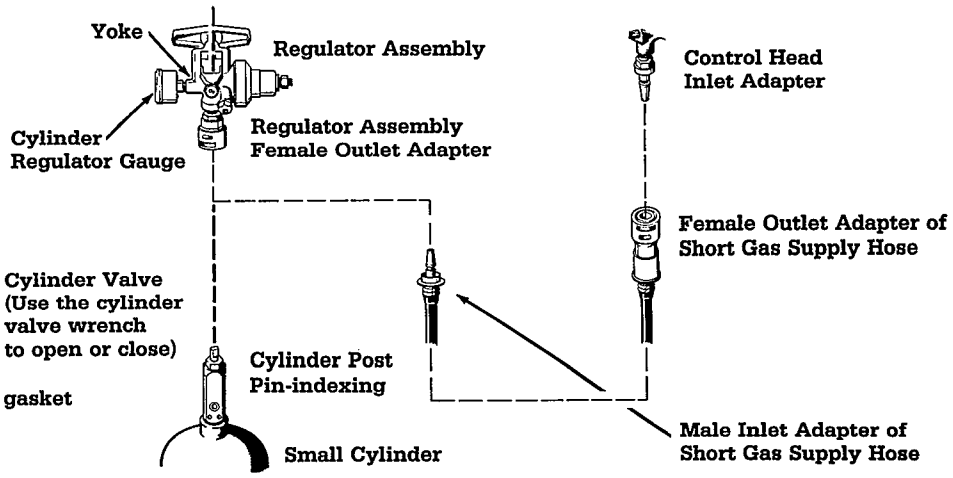


**Note: Make sure a cylinder gasket is in place and the pin-indexing matches.**

**Figure 14**
Supply Hose Connections for Small Cylinder Use

11. To mount a regulator assembly on a cylinder adapter: make sure a single fresh gasket is in place on the regulator inlet nipple, and the pin indexing of the regulator assembly matches the adapter. Tighten the regulator assembly onto the cylinder adapter. Make sure that the gauge is visible.

**CAUTION: Use only one cylinder gasket per yoke. Use of more than one gasket could cause cylinder gas leakage and improper engagement with the safety index pins.**

Note: Steps 12 and 13 describe gas supply hose connections. Choose the setup most suitable for the available cylinder supply. See Figures 14 and 15.

12. Use short supply hoses for small cylinders; long hoses for large cylinders. Connect the male inlet adapters of the supply hoses to the female regulator outlet adapters. Connect the female outlet adapter of the supply hoses to the male inlet adapters on the back of the control head.

13. If large gas cylinders are to be used as a primary supply, and small gas cylinders are to be used as a reserve supply; the following can be done:
    a. Attach an oxygen regulator assembly to a large oxygen cylinder fitted with an adapter, and a nitrous oxide regulator assembly to a large nitrous oxide cylinder fitted with an adapter. Attach the remaining two regulator assemblies to the appropriate small cylinders.
    b. Connect the appropriate long supply hoses to the oxygen and nitrous oxide large cylinder regulator assembly outlets.
    c. Connect the male adapter end of the short supply hoses to each female adapter end of the long supply hoses.
    d. Connect the female adapter end of the short supply hoses to the control head male outlets.
    e. If a large cylinder supply becomes depleted; simply disconnect the short supply hose from the long supply hose and connect it to the small cylinder's regulator assembly outlet on the corresponding small cylinder.

14. Using suitable shims, adjust the case until the bubble in the sight level (located on the inside of the right support arm) is centered.

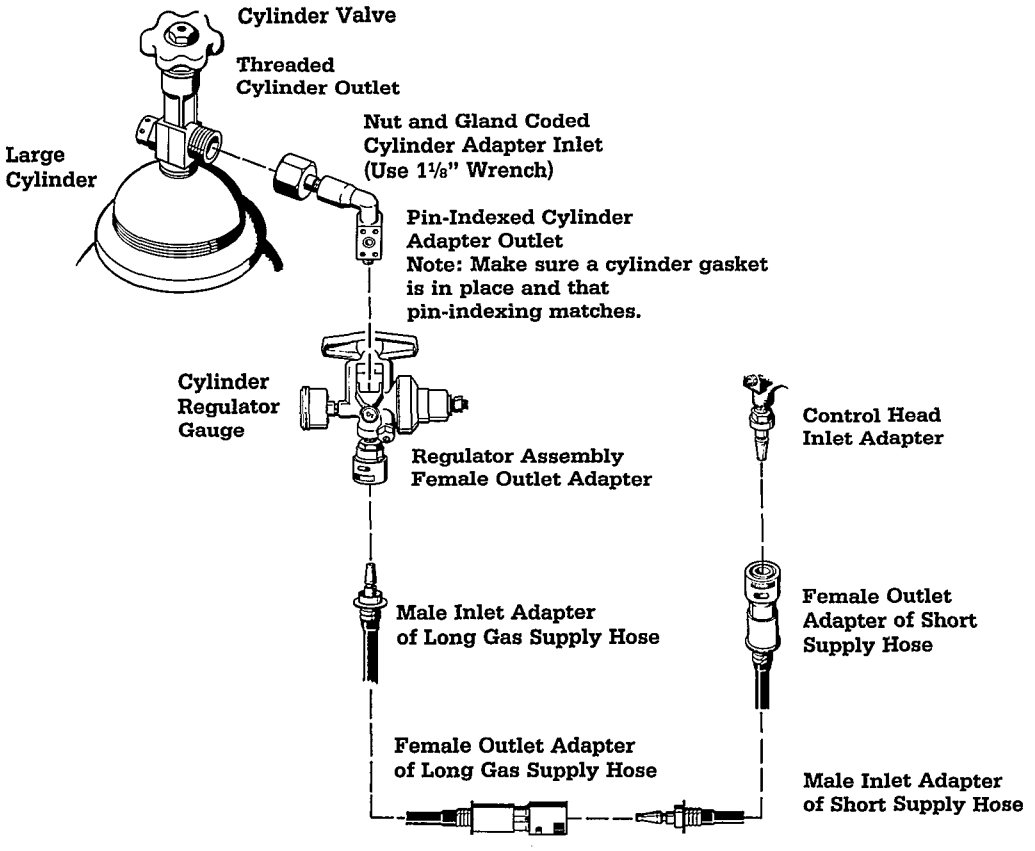


**Note: The long gas supply hose and the short gas supply are used when a large cylinder is to be used as a primary supply and a small cylinder is to be used as reserve supply. Also, long and short gas supply hoses may be connected in series to use cylinders too far away for a single length of hose to reach.**

**Figure 15**
Supply Hose Connections for Large Cylinder or Primary/Backup Use

**Table 3 – Controls and Indicators**

| Control or Indicator | Function |
|---|---|
| Regulator Assembly Pressure Gauges for Oxygen and Nitrous Oxide | Indicate the pressure from an open cylinder (psig). |
| Flow Control Valves for Metabolic Oxygen, "Oxygen for Vaporizer" and Nitrous Oxide and Nitrous Oxide | Control individual flows from the cylinder of each gas. |
| Flowmeters for Metabolic Oxygen, Vaporizer Oxygen and Nitrous Oxide | Indicate individual flow rates of each gas (cc/min or LPM). |
| $O_2$ Flush Valve pushbutton | Provides high rate of oxygen flow when pressed (minimum 40 LPM) |
| Breathing Circuit Pressure Gauge | Indicates amount of pressure in the breathing circuit (mm Hg and cm $H_2O$). |
| APL (Adjustable Pressure Limiting) Valve | Determines pressure at which the breathing circuit is vented. |
| Vaporizer ON-OFF Control Knob | If ON, vaporizer oxygen flows through the vaporizing chamber; if OFF, oxygen bypasses the vaporizing chamber. |
| Inhalation and Exhalation Check Valve | Direct the flow in the breathing circuit. |
| Non-adjustable Relief Valve | Limits maximum amount of pressure delivered to the patient. |
| Vaporizer Dial Thermometer | Indicates the temperature of liquid anesthetic agent within the vaporizer. |
| Sight Level | Indicates flowmeters oriented for maximum accuracy. |

## 3.2 Breathing Circuit Setups and Checkout

### A. Adult Rebreathing Circuit

**(See Figures 16 and 19)**

After performing the general setup, the adult rebreathing circuit is setup as follows:

1. Remove the two long breathing tubes from the upper case. Remove the Y-connector from the storage compartment of the lower case.
2. Fit one bushing of a breathing tube onto the horizontal 22 mm male taper port of the exhalation check valve. Fit one bushing of the other breathing tube onto the 22 mm male taper port extending from the vaporizer.
3. Fit the other bushing of each breathing tube onto the 22 mm limbs of the Y-connector.
4. Loosen the clamp screw under the absorber crossbar. Remove the absorber canisters, then remove the gas scavenging tubes stored within the canisters.
5. Fill each canister with loose soda lime or a cartridge of soda lime. Follow the soda lime manufacturer's instructions for properly filling the canisters.
6. Replace the absorber canisters so that they are properly aligned, then tighten the clamp screw to seal the canisters against the control head body.

**CAUTION: Do not overtighten the clamp screw under the absorber crossbar. Overtightening could cause canisters to warp resulting in gas leakage.**

**CAUTION: When using Pre-Pak factory prefilled absorbant cartridges, remove the screens from the base of the canisters, otherwise the resistance in the patient breathing circuit may be too high.**

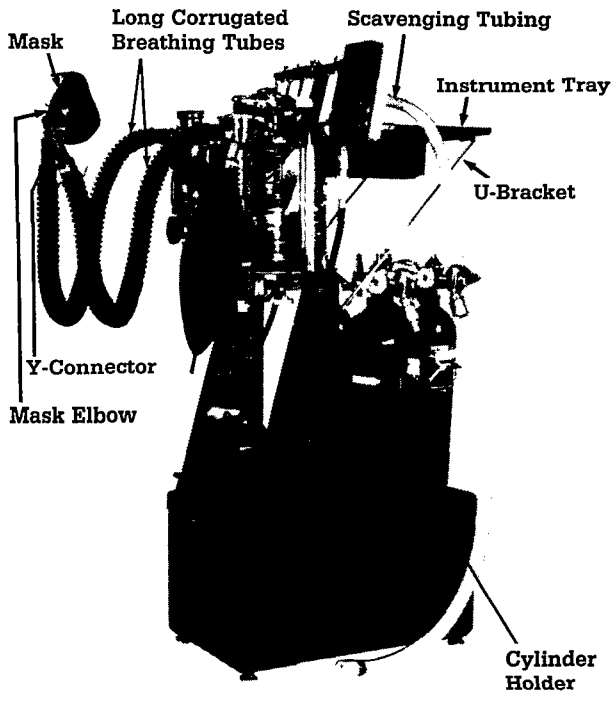


**Note: Masks and elbow are attached after Preoperative Tests of the circuit are completed.**

**Figure 16**
Adult Rebreathing Circuit

7. Fit one bushing of the scavenging tube over the exhaust port of the APL valve. Thread the other end of the bushing through the opening between the flowmeters, to the back of the apparatus; and then to whatever evacuation accommodation is available. If more length is required, connect the other section of tubing to the tubing already being used.

   Note: Each evacuation tubing includes a metal connector for joining tubes end to end to provide extended length. Do not discard these connectors.

8. Do the following preliminary check procedures after each initial setup:

a. Close all three flow control valves (turn clockwise to the stop).
b. Turn the vaporizer to the OFF position.
c. Slowly open the valves of the cylinders which are to be in use, making sure to open the oxygen cylinder(s) first.
d. Check the regulator gauges to verify pressure readings.
e. Slowly open each flow control valve to verify that flow is indicated on the flowmeter scale. Close the flow control valves.
f. Press the oxygen Flush Button to verify the flush flow and also verify that the inhalation check valve is opening properly.

9. Do the following preliminary check procedures for the Inhalation Check Valve after each initial setup:

a. Disconnect the hoses from the vaporizer outlet port and the exhalation check valve port.
b. Close the APL Valve (fully clockwise).
c. Plug the vaporizer outlet port with a rubber stopper.
d. Open the absorber drain cock (2 turns).
e. Set the flow to 300 cc/min on the $O_2$ Flow meter.
f. Pressure on the breathing circuit pressure gauge must increase. Do not allow pressure to exceed 40 cm $H_2O$.
g. If the pressure does not rise, inspect the inhalation check valve disc and seat. Refer to the Troubleshooting Guide if further help is needed.
h. Close the flow control valve.
i. Close the absorber drain cock.

10. Do the following preliminary check procedures for the Exhalation Check Valve after each initial setup:

a. Remove the rubber stopper from the vaporizer outlet port.
b. Connect a breathing tube from the vaporizer outlet port to the bag port.
c. Set the flow to 300 cc/min on the $O_2$ Flow meter.
d. Push the flush button to pressurize the breathing circuit to approximately 40 cm $H_2O$.
e. Pressure on the breathing circuit pressure gauge must not decrease.
f. If the pressure decreases, inspect the exhalation check valve disc and seat. Refer to the Troubleshooting Guide if further help is needed.
g. Close the flow control valve.

11. Do the following preliminary check procedures for the vaporizer after each initial setup:

a. Remove the rubber stopper from the vaporizer outlet port.
b. Connect a breathing tube from the vaporizer outlet port to the bag port.
c. Turn the vaporizer to the ON position.
d. Set the flow to 300 cc/min on the VAPORIZER FLOW.
e. Push the flush button to pressurize the breathing circuit to approximately 40 cm $H_2O$.
f. Pressure on the breathing circuit pressure gauge must not decrease.
g. If the pressure decreases, inspect the vaporizer for leaks.
h. Close the flow control valve.

12. Do the following preliminary check procedures to test the flow through the exhalation check valve and APL Valve after each initial setup:

a. Disconnect the breathing tube from the bag port and connect it to the exhalation port.
b. Turn the vaporizer to the OFF position.
c. Plug the bag port with a rubber stopper.
d. Open the APL Valve (fully counterclockwise).
e. Push the flush button. The pressure on the gauge should not exceed 5 cm $H_2O$.
f. If the pressure is more than 5 cm $H_2O$, inspect the exhalation check valve and APL Valve.
g. Disconnect the breathing tube from the exhalation port.
h. Remove the rubber stopper from the bag port.
i. Fit one bushing of the other breathing tube onto the horizontal 22 mm male taper port of the exhalation check valve.
j. Fit the other bushing of each breathing tube onto the 22 mm limbs of the Y-connector.

13. Remove the large breathing bag from the upper case and fit onto the lower port of the exhalation check valve.

14. Do the following preliminary check procedure to test the oxygen pressure sensor after each initial setup:

a. Open the oxygen and nitrous oxide flow control valves to 1 liter.
b. Close the oxygen cylinder valve and after a short period of time, check to ensure that the Nitrous Oxide is disabled as the pressure sensor operates.

15. Close the cylinder valves. Do not operate the unit until the remainder of this setup section and the entire operation section have been read in their entirety.

**B. Pediatric Partial Rebreathing Circuit**

**(See Figures 17 and 20)**

After performing the general setup (Section 3.1), the Pediatric Partial Rebreathing circuit is setup as follows:

1. Remove the pediatric supply tube, the short corrugated breathing tube and the small breathing bag from the upper case.
2. Fit the pediatric supply tube male connector into the vaporizer outlet port.
3. Fit the short corrugated breathing tube male connector into the small breathing bag female connector.
4. Fit the pediatric tee male connector into the short corrugated breathing tube female connector.
5. Make sure the scavenging valve is attached to the small breathing bag. Close the scavenging valve as far as possible.
6. Loosen the clamp screw under the absorber crossbar. Remove the absorber canisters, then remove the gas evacuation tubing stored within the canisters.
7. Replace the empty absorber canisters so that they are properly aligned, then tighten the clamp screw to seal the canisters against the control head body.
8. Turn the APL valve fully clockwise (closed).
9. Plug both ports of the exhalation check valve with rubber stoppers.
10. Connect the gas evacuation tubing to the scavenging valve.
11. Do the following preliminary check procedures after each initial setup:
    a. Close all three flow control valves (turn clockwise to the stop).
    b. Turn the vaporizer to the OFF position.
    c. Slowly open the valves of the cylinders which are to be in use, making sure to open the oxygen cylinder(s) first.
    d. Check the regulator gauges to verify pressure readings.
    e. Slowly open each flow control valve to verify that flow is indicated on the flowmeter scale. Close the flow control valves.
    f. Press the oxygen Flush Button to verify the flush flow and also verify that the inhalation check valve is opening properly.
12. Do the following preliminary check procedure to test the oxygen pressure sensor after each initial setup:
    a. Open the oxygen and nitrous oxide flow control valves to 1 liter.
    b. Close the oxygen cylinder valve and after a short period of time, check to ensure that the Nitrous Oxide is disabled as the pressure sensor operates.
13. Close the cylinder valves. Do not operate the unit until the remainder of this setup section and all of the operation section have been read in their entirety.

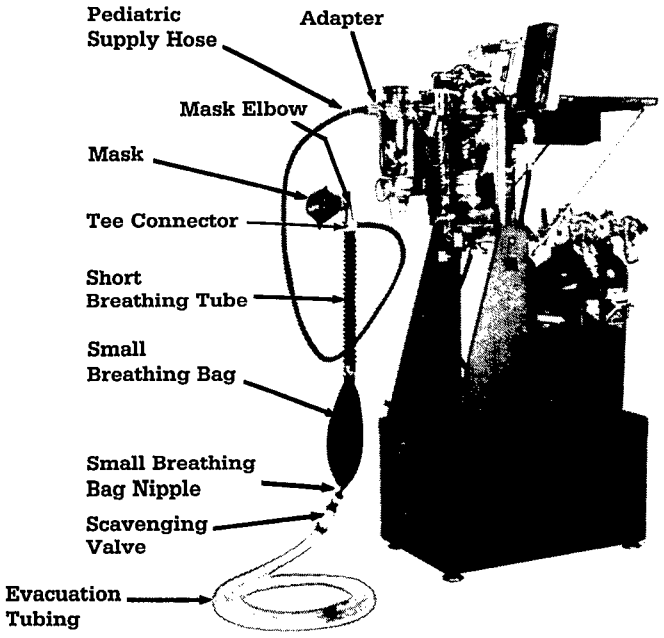


**Note: Masks and elbow are attached after Preoperative Tests of the circuit are completed. (See page 23).**

**Figure 17**
Pediatric Partial Rebreathing Circuit

## 3.3 Draining Vaporizer

**(See Figure 18)**

**WARNING: Never mix two or more agents in the vaporizer when filling or cleaning. The vapor delivered could have an adverse effect on the patient. Also, mixing of agents could result in an unpredictable vaporizer output. Always drain, then dry liquid agent from the vaporizer before adding another agent.**

Before adding a liquid anesthetic agent to the vaporizer, be certain no other agents are present in the vaporizer. To remove an agent and dry the vaporizer do the following:

a. Place a properly labeled container under the drain spigot, unscrew the drain plug two or three turns and allow the liquid agent to drain into the container.

**WARNING: Never drain liquid anesthetic agent into an unmarked container. To prevent a serious accident, always drain the liquid into a container labelled for the same agent, e.g., drain a Halothane designated vaporizer into a Halothane anesthetic bottle, etc. with Ethrane and Forane.**

b. Turn the vaporizer control knob to the ON position.
c. Remove any tube or fitting from the vaporizer port.
d. Set the "$O_2$ for Vaporizer" flow control valve so that a flow of 200 cc/min is shown on the flowmeter. Flow oxygen for approximately 30 minutes or until the odor of anesthetic agent is no longer detectable at the vaporizer port.
e. Turn the vaporizer control knob and the "$O_2$ for Vaporizer" flow control valve off, then reseal the drain spigot.

**Draining Vaporizer after using Halothane**

a. Place a properly labeled container under the drain spigot, unscrew the drain plug two or three turns and allow the liquid Halothane to drain into the container, then reseal the drain spigot.

**WARNING: Never drain liquid anesthetic agent into an unmarked container. To prevent a serious accident, always drain the liquid into a container labelled for the same agent, e.g., drain a Halothane designated vaporizer into a Halothane anesthetic bottle, etc. with Ethrane and Forane.**

b. Remove any tube or fitting from the vaporizer port.
c. Add hot water to the vaporizer by removing the vaporizer funnel plug and gradually pour in hot water until the water is visible at the top of the liquid level indicator. When the vaporizer is full, reinstall the funnel plug. Leave the water in for 5 minutes and drain, then reseal the drain spigot.
d. Add ethyl alcohol to the vaporizer by removing the vaporizer funnel plug and gradually pour in alcohol until the alcohol is visible at the top of the liquid level indicator. When the vaporizer is full, reinstall the funnel plug. Leave the alcohol in for 20 minutes and drain.
e. Turn the vaporizer control knob to the ON position.
f. Set the "$O_2$ for Vaporizer" flow control valve so that a flow of 200 cc/min is shown on the flowmeter. Flow oxygen for approximately 30 minutes or until the odor of ethyl alcohol is no longer detectable at the vaporizer port.
g. Turn the vaporizer control knob and the "$O_2$ for Vaporizer" flow control valve off, then reseal the drain spigot.

**WARNING: Do not attempt to fill the vaporizer when in use. Close the "$O_2$ for Vaporizer" flow control valve, and turn the vaporizer control knob to the OFF position before removing the funnel plug.**

To add liquid anesthetic agent to the vaporizer remove the vaporizer funnel plug and gradually pour in agent until the liquid is visible in the liquid level indicator. When the vaporizer is full, reinstall the funnel plug.

**WARNING: Always make sure that a liquid level is visible. If an inadequate (less than 50 ml) amount of liquid agent is present, the desired vapor concentration may not be delivered.**

**WARNING: Make sure the funnel plug sealing O-ring is in good condition and that the funnel plug is securely hand tightened. Any leaks from around the funnel plug can result in loss of vapor and gas to the atmosphere.**

**WARNING: Do not turn the vaporizer control knob to the ON position until the flow of diluting gas has been set. *To do so might expose the patient to a lethal concentration of anesthetic agent vapor.***

See Section 4.3 Page 26.

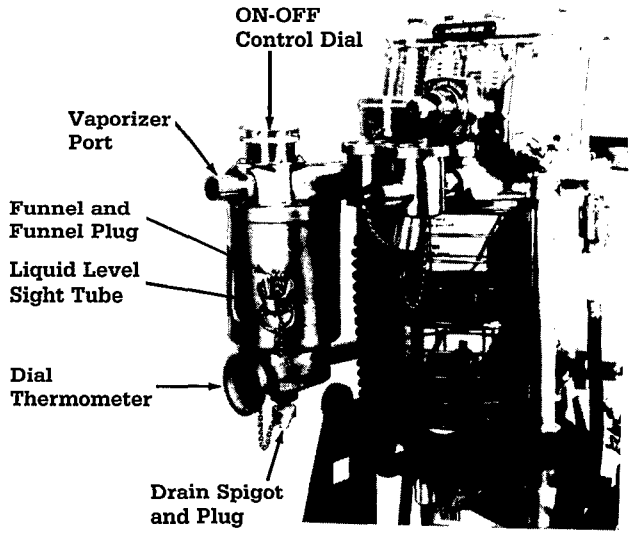


**Figure 18**
Anesthetic Vaporizer

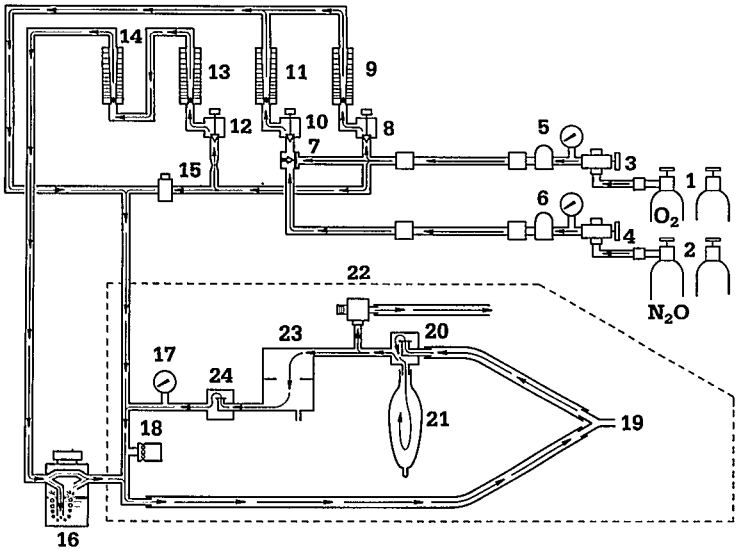


Description

1. $O_2$ Cylinder
2. $N_2O$ Cylinder
3. $O_2$ Cylinder Adapter
4. $N_2O$ Cylinder Adapter
5. $O_2$ Regulator Assembly
6. $N_2O$ Regulator Assembly
7. Pressure Sensor Valve
8. $O_2$ Flow Control Valve
9. $O_2$ Flowmeter
10. $N_2O$ Flow Control Valve
11. $N_2O$ Flowmeter
12. $O_2$ for Vaporizer Flow Control Valve
13. $O_2$ for Vaporizer Flowmeter (Low Flow)
14. $O_2$ for Vaporizer Flowmeter (High Flow)
15. $O_2$ Flush Valve
16. Anesthetic Vaporizer
17. Breathing Circuit Pressure Gauge
18. Pressure Relief Valve (Non-Adjustable)
19. Y-Connector
20. Exhalation Check Valve
21. Breathing Bag (3 Liter)
22. Gas Evacuator/Relief Valve
23. Absorber
24. Inhalation Check Valve

**Figure 19**
Adult Rebreathing Circuit

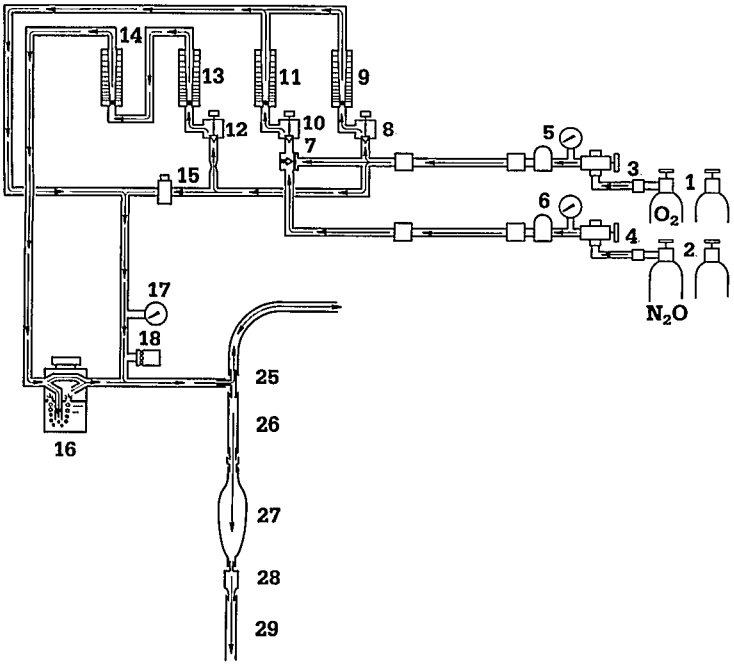


Description

1. $O_2$ Cylinder
2. $N_2O$ Cylinder
3. $O_2$ Cylinder Adapter
4. $N_2O$ Cylinder Adapter
5. $O_2$ Regulator Assembly
6. $N_2O$ Regulator Assembly
7. Pressure Sensor Valve
8. $O_2$ Flow Control Valve
9. $O_2$ Flowmeter
10. $N_2O$ Flow Control Valve
11. $N_2O$ Flowmeter
12. $O_2$ for Vaporizer Flow Control Valve
13. $O_2$ for Vaporizer Flowmeter (Low Flow)
14. $O_2$ for Vaporizer Flowmeter (High Flow)
15. $O_2$ Flush Valve
16. Anesthetic Vaporizer
17. Breathing Circuit Pressure Gauge
18. Pressure Relief Valve (Non-Adjustable)
25. Pediatric Tee Connector
26. Breathing Tube, Corrugated (Short)
27. Breathing Bag (1 Liter)
28. Scavenging Valve, Adjustable Orifice
29. Gas Evacuation Tubing

Note: Items 19 through 24 appear in Figure 19.

**Figure 20**
Pediatric Partial Rebreathing Circuit

# 4/Checkout and Operation

## 4.1 Theory of Operation

Refer to Figures 19 and 20 when reading the following Theory of Operation section. The schematic in Figure 19 represents the apparatus when it is setup for using the adult rebreathing technique; the schematic in Figure 20 represents the apparatus when it is set up for using the pediatric partial rebreathing technique. Note that the delivery circuit is identical for both techniques.

**A. The Delivery Circuit**

**See Figure 19 and 20**

The delivery circuit consists of the following items and components:

1. the oxygen (item 1) and nitrous oxide (item 2) gas cylinders,
2. the cylinder regulator assemblies (items 5 and 6),
3. the cylinder adapters (items 3 and 4) if large cylinders are used,
4. the pressure sensor shut off valve (item 7),
5. the flow control valves (items 10 and 12) and flowmeters (items 11, 13 and 14),
6. the oxygen flush valve (item 15), and
7. the Anesthetic Vaporizer (item 16)

Oxygen and nitrous oxide cylinders provide the gas supply for the anesthesia apparatus. Both cylinder gas supplies leave the cylinder outlets at high pressures, and both must be regulated to a lower pressure before entering the supply hoses leading to the control head. If large cylinder supplies are used, regulator assemblies are mounted on cylinder adapters. If small cylinder supplies are used, regulator assemblies are mounted on the cylinder valves. In either case, the regulators within the regulator assemblies reduce the cylinder gas supply pressures to about 40 psig.

Both oxygen and nitrous oxide flow out of their respective regulator assembly outlets, through the supply hoses and into the control head inlets. Oxygen takes three flow paths after it enters the control head; nitrous oxide takes only one path.

Oxygen flows:

1. to the metabolic oxygen flow control valve
2. to the normally closed pressure sensor valve in the nitrous oxide flow path, and
3. to the "$O_2$ for Vaporizer" flow control valve and the oxygen flush valve.

If open, the metabolic oxygen flow control valve admits oxygen flow through the metabolic oxygen flowmeter. Metabolic oxygen flow then enters the common mixing passage in the flowmeter top manifold.

The function of the pressure sensor valve is to close off nitrous oxide flow to its flow control valve in the event of an oxygen supply failure or depletion. The pressure sensor valve is located in the gas circuit such that, it is controlled by pressure in the oxygen line, but can reduce or block flow in the nitrous oxide line. If oxygen pressure is maintained at greater than 30 psig the valve will remain open. If oxygen pressure is reduced to less than 30 psig, the pressure sensor valve will partially close, until at 20 psig it will close completely.

If the pressure sensor valve is open and the nitrous oxide flow control valve is open, nitrous oxide flow is admitted to the nitrous oxide flowmeter. Measured nitrous oxide flow then enters the common mixing passage where it is mixed with the metabolic oxygen flow. The oxygen-nitrous oxide mixture flows directly into the breathing circuit. Although the mixed flow takes a path which traverses the vaporizer, it does not enter the vaporizing chamber at any time.

An independent flow of oxygen is required to operate the vaporizer. Like metabolic oxygen, oxygen for the vaporizer uses the cylinder supply for its source. However, when oxygen for the vaporizer enters the control head it takes a path to the separate flow control valve and flowmeter designated "$O_2$ for Vaporizer". When open, this flow control valve admits oxygen to the series-connected high-flow and low-flow flowmeters.

Oxygen for the vaporizer does not flow through the common mixing passage. It flows, free of other gas mixture, to the vaporizer, and when the vaporizer control knob is ON, through the vaporizing chamber to act as a vehicle gas. That is, oxygen for the vaporizer is bubbled through the liquid anesthetic and becomes saturated with anesthetic agent vapor. The saturated oxygen flow then provides the "vehicle" to carry the vapor out of the vaporizing chamber and into the oxygen-nitrous oxide mixture flowing from the common mixing passage.

The oxygen-nitrous oxide mixture dilutes the vapor saturated vehicle oxygen flow to a ratio suitable for administration to the patient. The total flow of vapor saturated oxygen and the diluting oxygen-nitrous oxide mixture is delivered through the vaporizer outlet port and into the inhalation breathing tube (See Section 4.3 for instructions on how to determine concentrations of anesthetic agent vapor in the total flow).

Vehicle oxygen can only pass through the vaporizing chamber when the vaporizers control knob is ON. When the control knob is OFF, all vehicle oxygen bypasses the vaporizing chamber, and flows directly to the vaporizer outlet port.

Note: Close the "$O_2$ for Vaporizer" flow control valve when the vaporizer control knob is OFF.

**B. The Breathing Circuits**

1. **Adult Rebreathing Circuit** – The adult rebreathing circuit consists of the following items and components:

a. the breathing circuit pressure gauge,
b. the non-adjustable relief valve,
c. the absorber
d. the inhalation and exhalation check valves
e. the APL valve
f. the large breathing bag, and
g. the breathing tubes and patient connections (Y-connector, elbow, and mask)

The patient's breathing and the inhalation and exhalation check valves control the direction of flow within the breathing circuit. The adjusted total flow of gases from the delivery circuit flows to the patient via the breathing tube leading from the vaporizer outlet port to the patient Y-connector.

When the patient exhales, gas is directed, via the other breathing tube, to the exhalation check valve. The exhalation check valve opens, the breathing bag expands, and the inhalation check valve closes. When the patient inhales, the exhalation check valve closes, the breathing bag collapses, and the inhalation check valve opens.

Gas flowing through the exhalation check valve enters the absorber and flows downward through the soda-lime filled canisters so that carbon dioxide can be absorbed. A short corrugated tube allows the remainder of the gas to flow from the base of the absorber to the inhalation check valve. Gases flowing through the inhalation check valve rejoin the fresh gas flow and the cycle begins again.

There are two relief valves within the breathing circuit: the APL valve and the non-adjustable relief valve. The APL valve is located in the breathing circuit down-stream of the exhalation check valve and is adjusted by the user to a specific setting. If the pressure within the breathing circuit exceeds the pre-adjusted setting, the valve will open (relieve) and release gas to the evacuation system.

The non-adjustable relief valve opens and releases gas to the atmosphere whenever pressure in the breathing circuit exceeds 60-80 mm Hg.

The breathing circuit pressure gauge is located downstream of the inhalation check valve, and registers the pressure within the breathing circuit.

2. **Pediatric Partial Rebreathing Circuit** – The pediatric partial rebreathing circuit consists of the following items and components:

a. the pediatric supply tube with connector and tee,
b. the short corrugated breathing tube with connectors,
c. the small (1 liter) breathing bag with the scavenging valve and,
d. the patient connections (elbow and mask).

**WARNING: The APL valve must be completely closed during use of the pediatric partial rebreathing circuit. The loss of patient gases may occur.**

The adjusted total flow of gases from the vaporizer outlet port travels through the pediatric supply tube to the tee connector. The gas takes two directions at the tee connector:

a. it flows to the patient and
b. to the small breathing bag via the short corrugated breathing tube.

Gas which the patient eventually exhales flows to the small breathing bag along with whatever fresh gas was not inhaled.

Some of the gas which enters the small breathing bag will flow through the scavenging valve and into the gas evacuation system. Other gas from within the breathing bag may be administered to the patient by squeezing the breathing bag. The adjustment of the scavenging valve and the amount of gases delivered to the patient from the breathing bag must be determined by the anesthetist.

The non-adjustable relief valve will open (relieve) if pressure within the breathing circuit becomes greater than 60-80 mm Hg. Pressure within the breathing circuit is registered on the breathing circuit pressure gauge.

## 4.2 Preoperative Tests and Procedures

**CAUTION: No repair should ever be undertaken or attempted by anyone not having experience repairing devices of this nature.**

### A. Non-Adjustable Relief "Pop-Off" Valve

To verify operation of the non-adjustable relief valve, perform the following procedure prior to each general setup of the apparatus. This procedure is particularly important when the apparatus is to be used after a period of storage.

1. Make sure all cylinder supplies are closed.
2. Close all flow control valves to their stops.
3. Completely close the APL valve by turning the knurled control knob clockwise to the extent of its travel.
4. Use the protective closure devices and plug the outlets from the vaporizer and exhalation check valve.
5. S-L-O-W-L-Y open the oxygen cylinder valve.
6. Open the metabolic oxygen flow control valve to maximum flow (7 LPM).
7. Check the breathing circuit pressure gauge. Make sure the non-adjustable relief valve opens before the gauge needle reaches approximately 80 mm Hg.

**CAUTION: Do not allow the gauge pressure to build beyond the maximum on the gauge scale. Damage to the gauge could occur.**

**CAUTION: Do not depress the $O_2$ Flush Valve button while the vaporizer output is occluded. Damage to the gauge could occur.**

8. Close the metabolic oxygen flow control valve.
9. Close the oxygen cylinder valve.

If the non-adjustable relief valve sticks or is operating hesitantly, see Section 5.4, F for possible corrective measures. If this procedure fails, disassemble the valve for cleaning or repair. Figure 43, in the illustrated parts list, shows an exploded view of the valve.

### B. Zeroing the Breathing Circuit Pressure Gauge

**The apparatus must be in an upright position when this procedure is performed.**

The breathing circuit pressure gauge should be checked before each apparatus use to make sure the needle rests at zero. If zeroing is required adjust the small slotted screw under the edge of the gauge body. Turn the screw (a pocket knife blade works well for this) and observe the gauge dial. When the pointer rests at zero (±1 mm Hg), the gauge is adjusted. If the gauge cannot be so adjusted, it is defective and must be replaced.

### C. Leak Test Procedures and Troubleshooting Guides

**WARNING: Leakage of gases and vapors to the atmosphere from the anesthesia apparatus circuits may deprive the patient of metabolic oxygen and anesthetic agent, and may pollute the atmosphere. It is important that tests to determine possible leakage be performed before each use of the apparatus, and that leakage be reduced to an acceptable level.**

The Leak Test Procedures provided in this manual should be performed after each setup and use of the anesthesia apparatus. Troubleshooting guides follow each Leak Test Procedure, and should provide an indication on what the problem may be if a leak is indicated. The leak tests are easily performed and should become a routine part of the apparatus setup.

The routine maintenance section starting on Page 31 provides routine repair information, and the illustrated parts section starting on Page 48 shows how various components should be disassembled for repair. These sections will be helpful when attempting to correct problems which may be discovered while performing the Leak Test Procedures.

**WARNING: If the apparatus circuit does not conform to stated specifications, and the problem cannot be identified and repaired, do not use the apparatus.**

**CAUTION: Always open cylinder valves SLOWLY to avoid damaging the regulators.**

#### Leak Test Procedure No. 1

1. Disconnect the supply hoses from the control head inlets.
2. S-L-O-W-L-Y open the cylinder valves.
3. Note the pressure readings on the regulator assembly gauges.
4. Close the cylinder valves.

If gas is supplied from small cylinders the pressure shown on each gauge should not drop more than 100 psig per 5 minute period. If gas is supplied from large cylinders the pressure shown on each gauge should not drop more than 100 psig per 7 minute period. If the pressure drops at a faster rate, a significant leak exists at some point within the circuit from the cylinder valve to the disconnected end of the supply hose.

#### Troubleshooting Guide for Leak Test Procedure No. 1

a. Make sure the cylinder adapter (if used) is securely tightened on the cylinder. Make sure the cylinder gasket is in place on the cylinder valve or cylinder adapter. Replace any cylinder gasket which appears nicked or worn. Repeat steps 2-4 of Leak Test Procedure No. 1. If the stated specifications are met, proceed to Leak Test Procedure No. 2. If the stated specifications are not met proceed to b.
b. Disconnect the gas supply hose from the regulator assembly. Repeat steps 2-4 of Leak Test Procedure No. 1. If the stated specifications are now met, the leak is in the supply hose or supply hose connections. If the stated specifications are still not met, the leak is in the regulator assembly. Repair the circuit as required.

Proceed to Leak Test Procedure No. 2 when Leak Test Procedure No. 1 is completed.

#### Leak Test Procedure No. 2

1. Connect the supply hoses to the regulator assembly outlets and the control head inlets.
2. Close all flow control valves to their stops.
3. Open the cylinder valves to pressurize the circuit.
4. Close the cylinder valves. No flow should be indicated on the flowmeters.

#### Troubleshooting Guide for Leak Test Procedure No. 2

If flow is indicated on a flowmeter, make sure the flow control valve is closed to its stop. If the flow control valve is closed, and flow is still shown on the flowmeter, repair of the flow control valve is indicated.

Proceed to Leak Test Procedure No. 3A or 3B when Leak Test No. 2 is completed.

Note: Leak Test Procedure No. 3A is to be performed when an adult rebreathing circuit is to be used. Leak Test Procedure No. 3B is to be performed when a pediatric partial rebreathing circuit is to be used. In both instances, the test must be performed twice: once with the vaporizer control knob OFF; and again with the control knob ON.

A troubleshooting Guide for Leak Test Procedures No. 3A and 3B begins on this page.

#### Leak Test Procedure No. 3A (Perform when the Adult Rebreathing Circuit is to be used)

1. Remove the 3 liter bag from the lower exhalation check valve port. Insert one of the protective closure devices in place of the breathing bag.
2. Turn the APL valve knob clockwise to the closed position.
3. Connect the adult breathing tubes, one to the vaporizer port and one to the exhalation check valve port and attach the Y-Connector.
4. Close all flow control valves to their stops.
5. S-L-O-W-L-Y open the oxygen cylinder valve all the way.
6. Gradually open the oxygen flow control valve and establish a 200 cc/min. flow.
7. Block the Y-Connector opening.
8. Observe the breathing circuit pressure gauge.

**CAUTION: Do not allow the gauge pressure to build beyond the maximum on the gauge scale. Damage to the gauge could occur.**

**CAUTION: Do not depress the $O_2$ Flush Valve button while the vaporizer output is occluded. Damage to the gauge could occur.**

As the apparatus circuit is pressurized, the breathing circuit should rise to 35 mm Hg or higher. If the pressure shown does not rise to at least 35 mm Hg, the circuit has a leak. Attempt to correct the leak using the Troubleshooting Guide. Remember to close all cylinder valves and flow control valves and open the APL valve when the Leak Test Procedure is completed.

**Leak Test Procedure No. 3B (Perform when the Pediatric Partial Rebreathing circuit is to be used)**

1. Close the scavenging valve as far as possible.
2. Close all flow control valves and the APL valve.
3. Connect the pediatric breathing circuit to the vaporizer port.
4. S-L-O-W-L-Y open the oxygen cylinder valve all the way.
5. Gradually open the oxygen flow control valve and establish a 200 cc/min. flow.
6. Block the opening in the pediatric tee connector.
7. Pinch the small breathing bag nipple at a point above the scavenging valve.
8. Observe the breathing circuit pressure gauge. As the apparatus circuit is pressurized, the breathing circuit pressure gauge should rise to 35 mm Hg or higher. If the circuit meets these specifications move on to step 9. If the circuit does not meet these specifications, consult the Troubleshooting Guide and attempt to make the necessary repair. When repair has been made perform this test again remembering to include step 9.
9. Open the scavenging valve 3 to 4 turns (counterclockwise).
10. Release the breathing bag nipple and adjust the oxygen flow to 500 cc/min. The breathing circuit gauge must not exceed 3 mm Hg. If it does the scavenging valve is not opening properly and must be repaired or replaced. Remember to close all cylinder valves and flow control valves and open the APL valve when the test is completed.

**Troubleshooting Guide for Leak Test Procedure Nos. 3A and 3B**

A leak detected when performing Leak Test Procedure No. 3A or 3B may be corrected by doing the following:

a. Make sure the absorber canisters are aligned and fit snugly against the gaskets. Make sure the clamp screw is tightened.
b. Make sure all hose and tubing connections are secure.
c. Make sure that any protective closure devices used in the test procedure fit tightly.
d. Make sure the vaporizer funnel plug and drain spigot are securely tightened.
e. Make sure the APL valve is fully closed.
f. Make sure the threads on the neck of the breathing circuit pressure gauge fit securely into the control head casting.
g. Make sure fittings and connectors are securely tightened.
h. Make sure the inhalation and exhalation check valve dome rings are tightened.
i. Make sure the absorber drain spigot is tightened.

When all of the checks listed above have been made, perform the appropriate Leak Test Procedure again. If all Leak Test Procedure specifications are met, the apparatus may be used. If the specification cannot be met, further repair is indicated.

Note: A light film of soap solution to suspected joints while the circuit is under pressure may reveal the location of a leak.

## 4.3 Vaporizer Operation

**WARNING: Do not use the anesthesia apparatus after performing the leak test procedure until the vaporizer circuit has been purged with oxygen.**

**A. Total Flow Vapor**

**Concentration Factors**

The percentage of anesthetic agent vapor in the total flow delivered to the patient depends on the following factors:

1. **Temperature** – A change in anesthetic agent temperature will affect the amount of vapor which can be transported by vehicle oxygen. The vaporizer thermometer is provided to show the liquid anesthetic agent temperature within the vaporizing chamber.
2. **Pressure** – Pressure changes within the vaporizer will cause the ratio of vapor to vehicle oxygen to change. The pressure within the vaporizer can essentially be considered constant at approximately ambient pressure of the breathing circuit (generally atmospheric pressure).
3. **Anesthetic Agent Saturation Ratio** – The saturation ratio is the amount of vehicle oxygen divided by the amount of agent vapor in the vehicle oxygen. Each agent's saturation ratio is determined by temperature and pressure.

   Note: Saturation ratio curves for five anesthetic agents are shown on the Volatile Anesthetics Chart on Page 29.
4. **"Oxygen for Vaporizer" Flow Rate** – A change in the "Oxygen for Vaporizer" flow rate (cc/min) through the vaporizing chamber will change the flow rate of agent vapor delivered to the combined flow of other diluting gases.
5. **Total Flow Setting** – The total flow is the flow of saturated vehicle oxygen plus the combined flow of other diluting gases.

It will be necessary to use these factors when calculating:

a. the "oxygen for vaporizer" flowmeter setting required to produce a desired concentration of anesthetic agent vapor in a desired total flow, and
b. the concentration of anesthetic agent vapor in a total flow resulting from known flowmeter settings.

There are two methods of making each calculation. One method requires use of the flow calculator; the other method requires use of formulas and the Volatile Anesthetics Chart.

### B. Use of the Flow Calculator

The flow calculator allows the operator to determine required setting for the "oxygen for vaporizer" flowmeter to produce the desired concentration of anesthetic agent vapor in a desired total flow. To use the flow calculator do the following:

1. Find the value for the desired concentration of anesthetic agent vapor on the outermost scale of the calculator labeled % CONCENTRATION.
2. Set the scale labeled TOTAL FLOW so the desired total flow value aligns with the desired anesthetic agent concentration value.
3. Find the LIQUID TEMPERATURE on the calculator scale labeled with the name of the agent in the vaporizer.
4. Set the hairline on the LIQUID TEMPERATURE scale value which corresponds to the temperature shown on the vaporizer thermometer.
5. Read the required "oxygen for vaporizer" flowmeter setting where the hairline crosses the FLOW THRU VERNI-TROL scale.

**Example Problem I (See Figure 21)**

Find the "oxygen for vaporizer" flow rate when

- the desired total flow is 6 liters per minute containing a 2% concentration of Ethrane (ENFLURANE).
- the vaporizer thermometer reads 25°C.

To find the solution using the flow calculator.

a. Find the 2% value on the % CONCENTRATION scale.
b. Turn the TOTAL FLOW scale so that the 6 liters per minute value aligns with the 2% value.
c. Find the LIQUID TEMPERATURE scale for ETHRANE (ENFLURANE) and place the hairline on 25°C.

Solution: The hairline crosses the FLOW THRU VERNI-TROL scale at the 300 cc/minute value. The required "oxygen for vaporizer" flow rate to produce a 2% concentration of Ethrane (ENFLURANE) in a 6 liter total flow is 300 cc/min.

The balance of total flow, after the required "oxygen for vaporizer" flow rate has been determined, may be divided in suitable proportions among the flows of other diluting gases.

For example, using the solution given in Problem 1, the flow rate for "oxygen for vaporizer" must be 300 cc/min. This leaves a 5700 cc/min flow to be divided among the other diluting gases (6000 cc/min − 300 cc/min = 5700 cc/min). The proportionate flowmeter settings of other diluting gases will not affect the concentration of anesthetic agent vapor to be delivered. Generally it is recommended that at least 30 percent of the total gas flow be oxygen.

With the vaporizer control knob in the OFF position; FIRST set the desired flow rates for the other diluting gases, then set the "oxygen for vaporizer" flow rate.

**WARNING: Do not turn the vaporizer control knob to the ON position until the flow of diluting gas has been set. *To do so might expose the patient to a lethal concentration of anesthetic agent vapor.***

**WARNING: Proceed cautiously when using the flow calculator at elevations above sea level. The calculated FLOW THRU VERNI-TROL flow rate will provide higher concentrations of agent vapor in the total flow at elevations above sea level than at sea level. Use lower "oxygen for vaporizer" flow rates than calculated until experience has justified confidence in using higher flow rates.**

To determine the concentration of anesthetic agent vapor in a total flow resulting from known flowmeter settings, use the calculator in the following way:

1. Find the value on the FLOW THRU VERNI-TROL scale corresponding to the known "oxygen for vaporizer" flowmeter setting.
2. Find the value on the agent's LIQUID TEMPERATURE scale corresponding to the temperature shown on the vaporizer thermometer.
3. Set the hairline over both values.
4. Find the value for the known total flow rate on the TOTAL FLOW scale.
5. Read the value on the % CONCENTRATION scale aligning with the value on the TOTAL FLOW scale. This value indicates the concentration of anesthetic agent vapor in the total flow.

**Example Problem II (See Figure 22)**

Find the concentration of anesthetic agent vapor in the total flow when

- the "oxygen for vaporizer" flowmeter setting is 300 cc/min.
- the vaporizer contains Ethrane (ENFLURANE).
- the vaporizer thermometer reads 20°C.
- the total flow rate of gases is 6500 cc/min.

To find the solution using the flow calculator:

a. Find the 300 cc/min value on the FLOW THRU VERNI-TROL scale.
b. Find the 20°C value on the LIQUID TEMPERATURE for ETHRANE (ENFLURANE) scale.
c. Set the hairline over both values.
d. Find the 6500 cc/min (6.5 liters/min) value on the TOTAL FLOW scale.

Solution: The Value on the % CONCENTRATION scale aligning with the 6500 cc/min value on the TOTAL FLOW scale is 1.35. The total flow contains an Ethrane (ENFLURANE) vapor concentration of 1.35%.

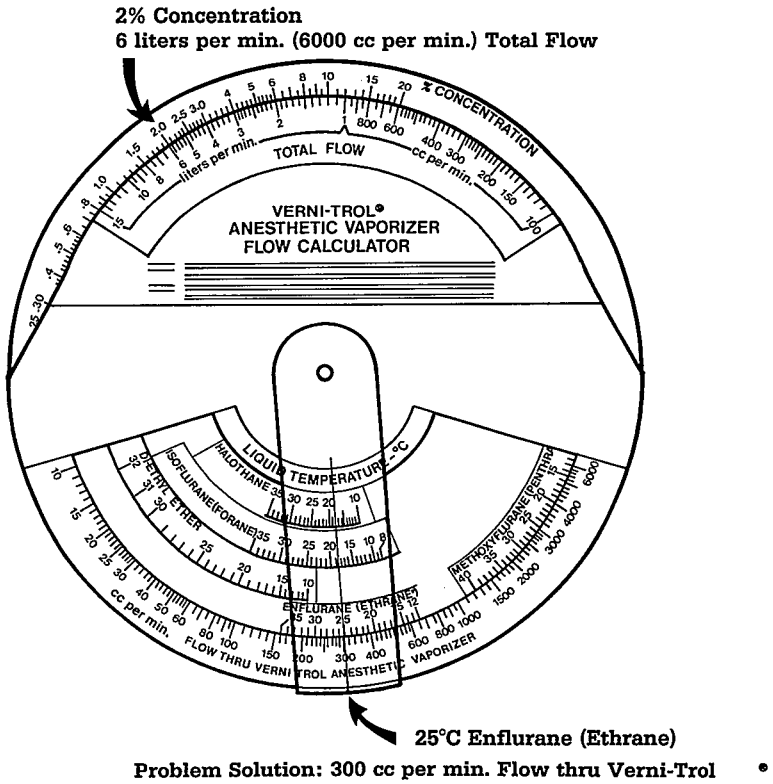


**Figure 21**
Flow Calculator, Solution to Example Problem I

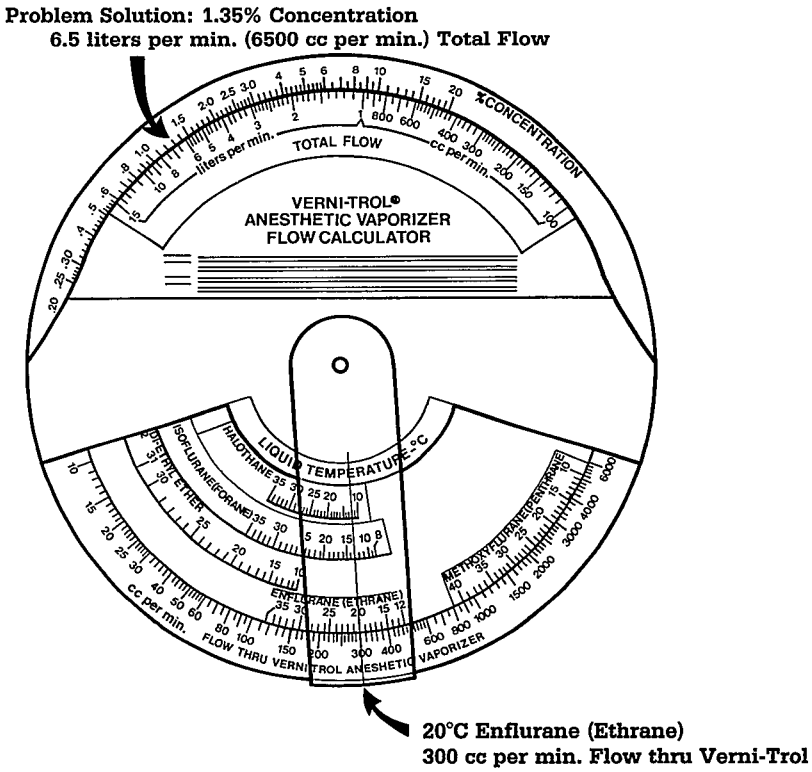


**Figure 22**
Flow Calculator, Solution to Example Problem II

### C. Use of the Formulas and Volatile Anesthetics Chart

The "oxygen for vaporizer (Fv)" flowmeter setting required to produce the desired concentration of anesthetic agent vapor in the total flow can be determined by using the following formula:

$$Fv = \frac{Ft\,C\,A}{100}$$

Ft = the total flow to the vaporizer outlet port
C = the anesthetic vapor concentration desired in the total flow (% of Ft)
A = the saturation ratio for the anesthetic agent being used.

Factor "A" is determined by using the Volatile Anesthetics Chart (See Figure 23). To use the chart:

1. Know the anesthetic agent being used in the vaporizer and observe its temperature within the vaporizer by reading the vaporizer thermometer.
2. Locate the temperature reading on the base line (Temperature C) of the chart.
3. Follow the temperature line upward until it intersects with the curve labeled with the name of the anesthetic agent being used in the vaporizer.
4. Follow the line from the point of intersection horizontally left to the scale for "A" (Factor "A760" Saturation Ratio).

**Example Problem III**

Find the "oxygen for vaporizer" flow rate when

- the desired total flow is 6 liters (6000 ml) per minute containing a 2% concentration of Ethrane (ENFLURANE)
- the vaporizer thermometer reads 25°C.

To find the solution using the given formula:

a. The anesthetic agent used is Ethrane (ENFLURANE) and the vaporizer thermometer reading is 25°C.
b. Follow the chart's 25°C temperature value line up to the curve for Ethrane (ENFLURANE).
c. Follow the line from the point of intersection horizontally left to find the factor "A" reading of 2.5 on the scale.
d. The following are known:
   Ft = 6000 cc/min (6 liters)
   C = 2%
   "A" = 2.5

   Solution:

   If, $Fv = \frac{Ft\,C\,A}{100}$

   Then, $Fv = \frac{(6000)(2)(2.5)}{100} = 300$

   The required "oxygen for vaporizer" flow rate for a 2% concentration of Ethrane (ENFLURANE) vapor in a 6 liter total flow is 300 cc/min.

**WARNING: Proceed cautiously when using the formula and Volatile Anesthetics Chart at elevations above sea level. The calculated flowmeter setting will provide higher concentrations of agent vapor in the total flow at elevations above sea level than at sea level. Use lower "oxygen for vaporizer" flow rates than calculated until experience has justified confidence in using higher flow rates. See Section 4.3.**

The Note below the Volatile Anesthetics Chart (Figure 23) provides a method of calculating factor "A" at pressures other than 760 mm Hg.

After using the formula to determine the "oxygen for vaporizer" flow rate, the balance of total flow should be determined in the manner described on page 25. It should be restated that the flow rates of other diluting gases must be set before the "oxygen for vaporizer" flow rate is set; and that the vaporizer control knob must remain in the OFF position until all flows are adjusted.

To determine the concentration of anesthetic agent vapor in a total flow resulting from known flowmeter settings (C%), use the following formula:

$$C\% = \frac{Fv(100)}{FtA}$$

Fv = the "oxygen for vaporizer" flowmeter setting
Ft = the total flow of all flowmeter settings
A = the saturation ratio for the anesthetic agent being used

**Example Problem IV**

Find the concentration of anesthetic agent vapor in the total flow when

- the "oxygen for vaporizer" flowmeter setting is 300 cc/min
- the vaporizer contains Ethrane (ENFLURANE)
- the vaporizer thermometer reads 20°C
- the total flow from all the flowmeters is 6500 cc/min

To find the solution using the given formula:
It is known that,

Fv = 300 cc/min
Ft = 6500 cc/min
A = 3.35 (found using the Volatile Anesthetics Chart)

Solution:

If, $C\% = \frac{Fv(100)}{FtA}$

Then, $C\% = \frac{(300)(100)}{(6500)(3.35)}$

$= 1.37\%$

The concentration of Ethrane (ENFLURANE) vapor in the known total flow rate adjustment of 6500 cc/min is 1.37%.

Note: The % CONCENTRATION value obtained when using the flow calculator may be slightly greater than that determined when using the formula and the Volatile Anesthetics Chart. The reason is that the TOTAL FLOW value on the flow calculator does not include the amount of anesthetic agent vapor flow. The formula includes this factor.

**Complete the breathing circuit to be used with an appropriate mask or endotracheal tube after all equipment checks, tests, and adjustments have been made. Make sure the entire circuit is correctly assembled for the breathing technique to be used (See Figures 16 and 17).**

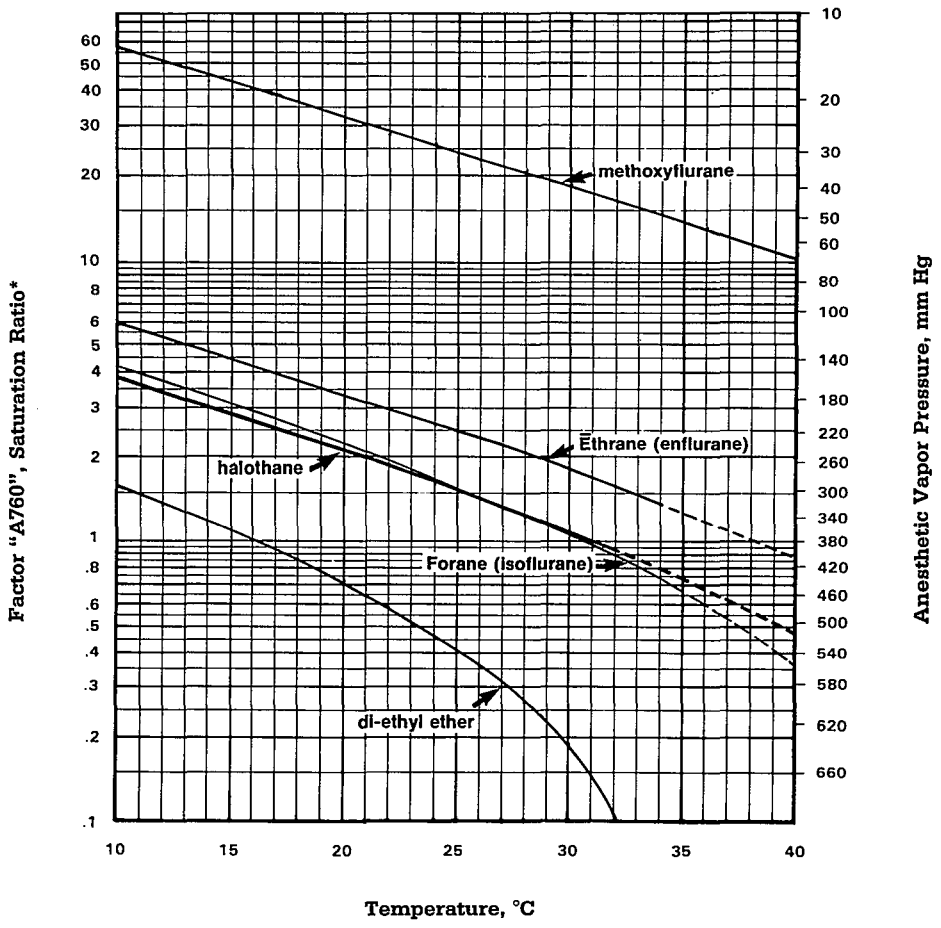


**Volatile Anesthetics Chart**

* Note: Factor "A" is pressure dependent. The factor "A" values given on the left scale are at 760 mm Hg (sea level) pressure. For calculations at ambient pressures other than 760 mm Hg, use the following formula to determine factor "A":

$$Ap = \frac{Pp - Pv}{Pv}$$

Ap = Factor "A" at ambient pressure, Pp.
Pp = Ambient pressure of anesthesia machine outlet circuit, mm Hg (Pp = 760 mm Hg at sea level and with no back pressure on the circuit).
Pv = Vapor pressure of anesthetic agent, mm Hg, at given temperature. Note that Pv is dependent on temperature only and NOT on ambient pressure. Pv for each agent and temperature is given on the right scale.
Pp – Pv = Partial pressure of vehicle gas, mm Hg.

**Figure 23**
Anesthetic Vapor Pressure vs Temperature Chart

## 4.4 Preoperative Checkout

**WARNING: Do not begin to use this anesthesia machine without verifying its correct operation and the correct operation of all associated equipment. Preoperative checkouts should be performed before each case and with the gas supplies that will be used for that specific case.**

Checkout procedures in this section pertain to the 885A Anesthesia Gas Machine only. Checkout associated equipment in accordance with the directions supplied in the respective operator's instructions.

**WARNING: Do not use a damaged or malfunctioning anesthesia system, patient injury could result.**

After daily use; shut the system down as described at the end of this section.

**Visual Inspection:**

1. Check the following for visible damage:

a. Insure control head and stand are locked in their upright position.
b. Check upper and lower case for items supplied and necessary for operation – see Figure 6, 12, 13 and the Item List and Location Chart in Section 2.
c. Cylinders and connections
d. Inlet adapters
e. Flow meters and flow control valves
f. Pressure gauges, breathing circuit and cylinders
g. Vaporizer filled but not over filled.
h. Monitor and cables.
i. All hoses and tubing in the system.

2. Check that all cylinders are properly installed.
3. Check that hose connections are firmly in place, connected to their proper control head inlets and locked in place.
4. Verify the operation of the Non-adjustable Relief "Pop-off" Valve. See Section 4.2, A.
5. Zero the Breathing Circuit Pressure Gauge. See Section 4.2, B.
6. Check that the vaporizer is operational (turn the vaporizer knob ON then OFF).
7. Check for adequate $CO_2$ absorbent in Absorber Canister.

   Note: Since the flow of exhaled gases is downward through the soda lime, the top canister is exhausted first. Change the soda lime within four hours of use after the color change begins in the lower canister.

8. Make certain there is a tee wrench available for cylinder supply valves.

**High Pressure Gas Circuit Check (Refer to Section 4.2)**

1. Disconnect the supply hoses from the control head inlets.

**CAUTION: Always open cylinder valves SLOWLY to avoid damaging the regulators.**

2. Open all cylinder valves S-L-O-W-L-Y, one at a time and verify that cylinder supplies are adequate by observing the cylinder gauge. Note the pressure of each cylinder and replace cylinders which show a gauge reading of under 400 psig.
3. Close all cylinder valves and observe each cylinder pressure gauge. The gauge should indicate no more than a 100 psig pressure drop in a seven minute period. If there is a pressure drop of more than 100 psig, the high pressure circuit has an unacceptable leak between the cylinder valve and the disconnected end of the supply hose.

**Low Pressure Gas Circuit Check (Refer to Section 4.2)**

1. Connect the supply hoses to the regulator assembly outlets and the control head inlets.
2. Close all flow control valves to their stops.
3. Open the cylinder valves to pressurize the circuit.
4. Close the cylinder valves. No flow should be indicated on the flowmeters.

**Breathing Circuit Check (Adult)**

1. Insert one of the protective closure devices (rubber stopper) in place of the breathing bag.
2. Turn the APL valve knob clockwise to the closed position.
3. Connect the adult breathing tubes, one to the vaporizer port and one to the exhalation check valve port and attach the Y-Connector.
4. Close all flow control valves to their stops.
5. S-L-O-W-L-Y open the oxygen cylinder valve all the way.
6. Gradually open the oxygen flow control valve and establish a 300 cc/min. flow.
7. Block the Y-Connector opening located at the ends of the patient breathing tubes. (See Figure 16).
8. Observe the breathing circuit pressure gauge.
9. Circuit pressure should rise to 35 mm Hg or higher. If it does not reach 35 mm Hg there is an unacceptable leak. Repair before use. See Section 4, Troubleshooting Guide for Tests 3A and 3B.

**Breathing Circuit Check (Pediatric)**

1. Close the scavenging valve as far as possible.
2. Close all flow control valves and the APL valve.
3. Connect the pediatric breathing circuit to the vaporizer port.
4. S-L-O-W-L-Y open the oxygen cylinder valve all the way.
5. Gradually open the oxygen flow control valve and establish a 200 cc/min. flow.
6. Block the opening in the pediatric tee connector. (See Figure 17).
7. Pinch the small breathing bag nipple at a point above the scavenging valve.
8. Observe the breathing circuit pressure gauge.
9. Circuit pressure should rise to 35 mm Hg. See Section 4, Troubleshooting Guide for Tests 3A and 3B. If the circuit pressure gauge reads 35 mm Hg or higher proceed with step 10.
10. Open the scavenging valve 3 to 4 turns (counterclockwise).
11. Release the breathing bag nipple and adjust the oxygen flow to 500 cc/min. The breathing circuit gauge must not exceed 3 mm Hg. If it does the scavenging valve is not opening properly and must be repaired or replaced. Remember to close all cylinder valves and flow control valves and open the APL valve when the test is completed.

# 4/Checkout and Operation

**Oxygen Monitor Check**

**WARNING: Ensure that there is proper ventilation for gas evacuation when performing the following check.**

The 5120 Oxygen Monitor should be calibrated at regular intervals (once a month or as required) using a concentration of 100% oxygen. Read the Operation and Maintenance manual for specifics on monitor calibration and use.

1. Calibrate the $O_2$ monitor to read 21% with the sensor in room air.

a. Place sensor in room air and adjust the CAL (calibration) control until the display reads 20 percent $O_2$.
b. Then readjust the control until the display just indicates 21%.

2. Press and hold the Circuit Test Switch and note the following:

a. The alarm tone should beep once.
b. Display should indicate 88 to 102% $O_2$.
c. All four messages should be on.
d. The red and yellow alarm indicators should be on.

3. Release the Circuit Test Switch – only the BATT OK message and backlight should remain on for approximately five seconds.

**Oxygen Monitor Flow Ratio Checks**

To check the Oxygen Monitor's calibration:

1. Mount the sensor in the patients inhalation circuit using the sensor tee, see Figure 35.
2. Turn the vaporizer to **OFF**.
3. Set the oxygen flowmeter at 3 liters per minute and the nitrous oxide flowmeter at 1 liter per minute flow. The oxygen monitor should indicate approximately 75% oxygen.
4. Set the oxygen flowmeter at 2 liters per minute and the nitrous oxide flowmeter at 2 liters per minute. The oxygen monitor should display approximately 50% oxygen.
5. Set the oxygen flowmeter at 1 liter per minute and the nitrous oxide flowmeter at 3 liters per minute. The oxygen monitor should read 25% oxygen.
6. Turn off the nitrous oxide flow control valve. Press the oxygen flush button and hold for 30 seconds. The oxygen monitor should read 100% oxygen at the end of the 30 second period.
7. Turn off the oxygen flow control valve. Turn on the nitrous oxide flow control valve to 4 liters per minute. Allow the nitrous oxide to flow for 10 to 15 seconds. The oxygen monitor should read 0%.

**WARNING: If the 5120 Oxygen Monitor fails the preceding initial checks do not attempt to use it. Remove the monitor from service and repair, calibrate and checkout the monitor as required to bring it up to published specifications.**

**System Shut down:**

There are two shut down procedures. The following shut down procedure is for in between cases. Shut down for longer storage or shipment is covered in Section 5.

For shut down between cases (short term)

1. Close all flow control valves.
2. Close all cylinder valves
3. Turn OFF vaporizer control knobs
4. Drain vaporizer (when repacking for storage or shipment).
5. After draining, tighten funnel plug and drain spigot.
6. Remove the evacuation tubing from the gas evacuator/relief valve.
7. Open the gas evacuator/relief valve completely (valve knob turned fully counterclockwise).

# 5/Routine Maintenance

## 5.1 Preventive Maintenance

**A. Changing Soda Lime in Canisters**

1. **Determining Need for Change:** Since the flow of exhaled gases is downward through the soda lime, the top canister is exhausted first. Change the soda lime within four hours of use after the color change begins in the lower canister.

**CAUTION: Before connecting the absorber to each patient make sure that the remaining capacity of the soda lime is adequate for the case at hand judged by the color position at the end of last use. Color recedes during rest, making estimate after rest unreliable.**

2. **Refilling Canisters:** Fill the canisters with soda lime (4-8 mesh high moisture indicator type is recommended) to the rim, eliminating any dust and fine granules in the process. An amount just sufficient to maintain contact with the unperforated portion of the covering surface is best.

Gently rap the base of the canister on a flat surface to settle the soda lime level with the edge of the canister.

Note: Too much soda lime may result in caking of granules and abrasion of the canisters. Too little will result in less effective absorption of the carbon dioxide.

**CAUTION: When using Pre-Pak factory prefilled absorbant cartridges, remove the screens from the base of the canisters, otherwise the resistance in the patient breathing circuit may be too high.**

3. **Rotating Canisters:** The top canister of soda lime is exhausted first because the flow of exhaled gas is down through the soda lime. By rotating the canisters, the absorption capacity of the soda lime is more fully used.

a. Fill the exhausted top canister with fresh soda lime and replace it in the lower position of the absorber.
b. Place the lower canister in the upper position.

**B. Check Valve Maintenance**

**(Figure 43)**

Keep the check valves clean. To disassemble, unscrew the threaded ring and lift off the window and gasket. Pull the valve cage and valve disc off the knife-edge seat carefully to avoid damaging the seat. Do not pull on the valve disc. It will come off with the cage.

Wash the loose parts in soapy water, (rinsing alone may suffice) rinse in clear water, and dry them thoroughly. **Do not use ether on plastic window.**

Carefully wipe the seat with a damp cloth to remove any foreign matter, dry it thoroughly, and replace the loose parts. Be sure the legs of the cage are clamped on the shoulder under the seat, and that the conical projection of the disc points up (See Figure 43).

See Section 5.3 for sterilization procedures.

**C. APL (Adjustable Pressure Limiting) Valve Maintenance**

1. General Information on Periodic Maintenance With time, particulate matter from the soda lime could be transported by the gas flow and penetrate the APL valve. If the valve tends to stick open or shut, or if the valve chatters and vibrates during periods of high gas flow the valve should be inspected, cleaned and lubricated to ensure accurate and efficient performance.

2. Disassembly, Cleaning, and Lubrication

   Note: Refer to Figure 42 for an exploded view of parts.

a. Use a Phillip's screwdriver to loosen and remove the four screws from the face plate of the valve.
b. Lift off the face plate and remove the internal components. Lay these components out on a convenient work area.
c. Inspect the internal components. Any accumulation of particulate matter from the soda lime will be most evident between the diaphragm and the housing. Clean the housing and diaphragm with warm soapy water and a soft brush, rinse and dry thoroughly. If any dust accumulation is evident on the knob or nameplate, wash, rinse and dry these components.
d. The rubber diaphragm should be checked for swelling, tackiness or cracking. When any of these conditions are in evidence, the diaphragm should be replaced. Make a similar inspection of the O-ring between the knob and face plate.
e. Inspect all other internal components for wear and replace any that are worn or damaged. Wipe all parts with a soft dry cloth and lubricate as follows: apply a thin layer of Cello-Seal* to the threads on the knob and also to the outside of the spring sleeve. Wipe off any excess.

**WARNING: Never oil or grease any anesthesia oxygen equipment unless the lubricant used is made and approved for this type of service. In general, oils and greases oxidize readily, and in the presence of oxygen, they will burn violently. Cello-Seal* is the oxygen service lubricant recommended for the APL Valve.**

3. Reassembly and Checkout

4. Make certain all components are grit free and dry before reassembly. Moisture remaining on the rubber diaphragm can cause tackiness and interfere with normal functioning.

5. Reassemble components in the order indicated in Figure 42. Check that the diaphragm is properly seated with the teflon plate facing the housing before remounting the nameplate. The cap should be mounted with the warning label facing up as shown in Figure 42.

**CAUTION: Do not obstruct the air vent in the knob of the APL valve. This vent helps prevent a pump action from developing in the spring sleeve when gas is flowing rapidly past the diaphragm. If the valve begins to chatter or vibrate, lubricate the outside of the spring sleeve with a light film of Cello-Seal*.**

6. Turn the knob fully counterclockwise and force gas out through the valve by slowly squeezing the rebreathing bag; note the reading on the absorber pressure gauge.

   The valve should relieve pressure at 2.5 mm Hg or less. Make sure pressure gauge reads zero before performing the test.

   See Section 4.2B to rezero the bag pressure gauge.

   If the APL valve relieves pressure at a pressure higher than 2.5 mm Hg when set to the minimum pressure relief setting, the problem could be that the valve is reassembled incorrectly or that the spring is stretched out.

   Do not use until the valve has been repaired and retested.

## 5.2 Cleaning

**A. Flowmeters**

Clean the transparent flowmeter shield as required with a soft cloth and water. Avoid using abrasive cleaners.

**B. Absorber**

Drain condensate through the spigot located under the absorber base and clean any accumulated residue from the base using a soft cloth.

The effectiveness of the canister is affected by leakage and breathing resistance. For maximum gas-tightness, the top edge must be kept smooth in order to fit snugly against the gasket. Handle the canisters carefully so as not to dent the top sealing edge.

To keep the breathing resistance low, keep the screens free of an accumulation of soda lime. Use warm water and a stiff-bristle brush to scrub the accumulated dust from both sides of the canister bottom. Do not scrub the interior side walls of the canister, but clean using only a soft cloth and warm water.

Allow the canisters to air dry before refilling with soda lime.

Cloudiness which may appear on the inside of the canisters can be removed by buffing the inside with dry Bon Ami* and a soft cloth. Do not use abrasive cleaning compounds as they will destroy the transparency of the canisters.

Note: Alcohol, alcohol-base soaps and disinfectants, and liquid anesthetics will tend to soften the plastic canisters.

The canisters may become distorted if the clamp screw is turned too tightly. For proper tightening, turn the screw until the canisters just seal against the gaskets and there are no leaks. Then loosen the knob set screw and turn the knob until it contacts the cross bar. Turn the knob back until the set screw lines up with the flat side of the adjusting screw, then tighten the set screw.

* Cello-Seal is a trademark of Fisher Scientific. Ohmeda Stock No. 0220-5160-300.

* Bon Ami is a registered trademark of Faultless Starch/Bon Ami Co.

**C. Vaporizer (See Section 5.4, E.)**

Make sure that the anesthetic agent is drained from the vaporizer when the apparatus is to be stored. The outside of the vaporizer may be cleaned with soap and water. Wipe the vaporizer dry with a soft cloth.

**D. Rubber Goods**

Rubber goods (natural and synthetic) deteriorate over a period of time and, therefore, must be considered as expendable items which are subject to periodic replacement.

The presence of oxygen, ether, mineral or vegetable oils, phenols, cresols, terpenes, hydrocarbon solvents, chlorinated hydrocarbons, esters, or oxidizing acids will hasten the deterioration process. Rubber articles should be checked often for swelling, tackiness, or cracking. When any of these conditions exists, the affected parts should be replaced.

The electrical conductivity of rubber goods decreases as the rubber ages. National Fire Protection Association (NFPA) regulations (pamphlets no. 56A) clearly state the requirements for rubber conductivity.

The useful life of rubber articles can be prolonged by following a program of intelligent use and care. The following suggestions should be carried out when possible:

1. If removal is required, remove metal connectors immediately after use.
2. When possible, rubber articles should be stored in the dark, away from sources of ozone generation such as fluorescent lighting fixtures, electric motors, and diathermy machines.

**WARNING: Talc, zinc stearate, calcium carbonate, or corn starch which may have been used to prevent tackiness of rubber articles could contaminate a patient's respiratory tract.**

## 5.3 Sterilization

**WARNING: Follow sterilization procedures carefully to avoid damage to components.**

**A. General Procedures (See Table 4)**

**Cold Sterilization**

Those components for which cold sterilization is suitable (see Table 4) may be washed with a mild alkali detergent, then sterilized in a cold germicidal solution.

**Steam Sterilization**

Those components for which steam sterilization is suitable (see Table 4) may be steam sterilized (autoclaved) at 121°C (250°F) and 104 kPa (15 psig) for 15 minutes or boiled for 15 minutes.

Following sterilization, allow components to dry or stand unused at room temperature overnight.

Drying can be accelerated by heating for two hours at 71°C (160°F).

**Gas Sterilization**

All components may be sterilized in an ethylene oxide mixture at 52-57°C (125-135°F). Room temperature sterilization is also effective by exposing components to 100% ethylene oxide for 12 hours.

Note: Refer to the manufacturer's recommendations for the proper concentration of ethylene oxide.

**CAUTION: Following sterilization with ethylene oxide, parts should be quarantined in a well ventilated area to allow dissipation of residual ethylene oxide gas absorbed by the rubber and plastic. In some cases, aeration period of seven days or more may be required. Aeration time can be decreased when special aeration devices are used. Follow manufacturer's recommendations for specific aeration periods required.**

**Table 4**

**Recommended Sterilization Methods**

| **Part** Identification | **Steam Sterilization (Autoclaving) 250°F** 15 mins | **Ethylene Oxide** Gas Sterilization | **Liquid** Sterilization Agents |
|---|---|---|---|
| Plastic Canisters (Absorber) | (See Note 1) | X | X |
| Windows, Check Valves (Absorber) | --- | X | X |
| Discs (Absorber) | --- | X | X |
| Absorber | X | X | --- |
| Inhalation Check Valve (less window & disc) | X | X | (See Note 2) |
| Exhalation Check Valve (less window & disc) | X | X | --- |
| APL Valve | X | X | --- |
| Rubber Goods | X | X | X |
| Apparatus | -- | X | --- |

1. Steam sterilization could warp discs and prevent the check valves from functioning properly. See Warning in Section 5.3C.
2. Liquid sterilization may leave a residue in these components that would interfere with proper operation. See Caution in Section 5.3C.

**B. Rubber Goods**

Note: Do not sterilize the two lightweight plastic corrugated evacuation tubes stored in the absorber canisters. These tubes are used only for the purpose of gas evacuation and should never come in contact with the patient. Follow cleaning suggestions for rubber goods in Section 5.2D of this manual for these two tubes.

1. **Cold Sterilization:** Rubber goods may be washed with a mild alkali detergent and sterilized in a cold germicidal solution intended for use with rubber.

2. **Steam Sterilization:** Rubber goods may be either steam sterilized at 121°C (250°F) for 15 minutes or boiled for 15 minutes. Avoid super heated steam which causes rapid deterioration of rubber parts.

   Note: Steam sterilization of masks is not recommended.

   Following sterilization, allow rubber goods to dry or stand unused at room temperature overnight in order to regain physical properties. Drying can be accelerated by heating for two hours at 71°C (160°F).

3. **Gas Sterilization:** Although pressure steam sterilization is the preferred method for the sterilization of rubber goods, an ethylene oxide mixture at 52 – 57°C (125-135°F) can be used. Room temperature sterilization is also effective by exposing rubber goods to 100% ethylene oxide for 12 hours.

   Note: Refer to the manufacturer's recommendations for the proper concentration of ethylene oxide.

**CAUTION: Following sterilization with ethylene oxide, parts should be quarantined in a well ventilated area to allow dissipation of residual ethylene oxide gas absorbed by the rubber and plastic. In some cases, aeration periods of seven days or more may be required. Aeration time can be decreased when special aeration devices are used. Follow manufacturer's recommendations for specific aeration periods required.**

**C. Absorber and Check Valves**

The component parts of the absorber and check valves must be segregated before sterilization. This is absolutely necessary because all three sterilization methods are not applicable to all parts of the absorber.

**Preparation for Sterilization**

1. Remove and group together:

a. The plastic canister(s) with metal grids from the absorber.
b. The two plastic windows, one from each check valve.
c. The two discs, one from each check valve.

The items in step 1 may be either cold sterilized or gas sterilized.

**WARNING: Do not steam sterilize the check valve discs. Steam sterilization could warp the discs and prevent the check valves from functioning properly.**

It is strongly recommended that the plastic canister(s) and the windows not be steam sterilized because the plastic will become cloudy over time, making observation of the operation of the check valves and the change in color of the soda lime progressively more difficult.

2. Other absorber components including the gauge and the remaining parts of the check valves with the attached gas evacuator valve may be gas sterilized only. (Refer to Table 4).

Prepare the absorber and check valve components for sterilization by opening the drain valve and set the gas evacuator valve to the minimum pressure setting.

**CAUTION: Do not cold sterilize the gauge or the APL valve. A residue will be left both in the gauge mechanism and in the valve internal components and this residue may affect proper operation of these devices.**

Steam sterilizing will cause progressive discoloration of the gauge dial. Steam sterilization will not affect the operation of the gauge.

The only method of sterilization that does not require segregation of parts is gas sterilization. All parts of the absorber and check valves may be gas sterilized, including the windows, discs, and plastic canisters. The major disadvantage is the extensive aeration period required to allow dissipation of ethylene oxide gas.

**D. Apparatus and Associated Components**

**CAUTION: Do not steam sterilize the anesthesia apparatus. High temperatures and residual water condensate may be detrimental to particular components.**

**Gas Sterilization**

The anesthesia apparatus and components may be gas sterilized in an ethylene oxide mixture at 52 – 57°C (125 – 135°F). Room temperature sterilization is also effective by exposing the unit to 100% ethylene oxide for 12 hours. Before using this sterilization method do the following:

Note: Refer to the manufacturer's recommendations for the proper concentration of ethylene oxide.

1. Remove the rubber goods and follow the instructions in Section 5.3B for sterilization of rubber goods.

2. Remove the absorber canisters and place them beside the apparatus.

3. Remove the protective closure devices from openings they protect.

4. Remove the funnel plug and drain spigot from the vaporizer.

5. Turn the vaporizer control knob to the ON position.

6. Turn the flow control valves fully counterclockwise.

7. Turn the APL valve knob fully counterclockwise.

## 5.4 Field Repair/Service

A unit which is not functioning properly should not be used until all necessary repairs have been made and the unit has been tested and meets the specifications stated in this manual.

**CAUTION: No repair should ever be undertaken or attempted by anyone not having experience repairing devices of this nature.**

**WARNING: Never oil or grease any anesthesia oxygen equipment unless the lubricant used is made and approved for this type of service. In general, oils and greases oxidize readily, and in the presence of oxygen, they will burn violently. Vac Kote is the oxygen service lubricant recommended for use.**

**WARNING: Never cover the anesthesia apparatus with any type of fabric or plastic covering. Removal of the cover may cause static electricity with the possibility of a resultant fire or explosion.**

Field repairs will usually be limited to replacement of worn or damaged parts. A qualified person may use the illustrated parts list starting on page 48 as a guide for making more extensive repairs.

**A. Regulators**

**CAUTION: Do not use organic based thread sealants on any portion of the oxygen regulator. Use only teflon thread-sealing tape or thread compound, Anti-seize and Sealing, Oxygen Systems, 4 oz. Tube, NSN 8030-00-243-3284.**

Gauges, strainer nipples, and check units can be replaced in the field. Internal repairs should be made by qualified repair personnel at a repair depot equipped to test the regulator performance.

**B. Flow Control Valves**

Frequently a leaking needle valve can be repaired without replacement of parts. Loosen the two set screws in the knob and remove the knob. Make sure the packing nut is tight. Turn the stem clockwise slowly until the leak stops. Replace the knob then turn it clockwise until its stop is reached. Tighten the set screws. If the needle valve is still leaking, notify qualified repair personnel. Avoid excessive torque when closing flow control valves. A stop is provided to indicate the closed position.

**C. Flowmeters**

Flowmeter parts are not interchangeable. Flowmeter tubes are imprinted with numbers which correspond to numbered positions on the flowmeter top manifold. If replacement of a flowmeter tube is required, the number imprinted on the flow tube replacement must match the number of the position requiring the replacement. In addition, replacement of a float, scale, or flowmeter tube alone will destroy the accuracy of the flowmeters. If a flowmeter tube breaks, its scale and float must also be replaced. Replacements must be made with a precalibrated kit which includes a float, tube and scale.

**WARNING: Do not operate the anesthesia apparatus if any flowmeter tube is broken. The anesthesia apparatus will not operate properly.**

**D. Inhalation and Exhalation Check Valves**

A check valve not functioning properly could be caused by a warped check valve disc. Extra check valve discs are supplied with the apparatus in the small vial stored in the lower case accessory compartment.

To replace a warped disc, remove the knurled retainer ring, window, gasket, and the valve cage which holds the disc. Remove the old disc, put the new disc in place with the conical tip pointing up. Reassemble the check valve.

**E. Vaporizer Funnel and Drain Plugs**

The funnel and drain plugs for the vaporizer may need to be replaced occasionally if over tightening has caused the threads to be worn. Extra plugs are provided in the larger plastic vial stored in the lower case accessory compartment.

**F. Non-Adjustable Relief Valve**

**(See Figure 11 for the location of the various components mentioned in this procedure).**

Frequently a sticking or hesitantly operating Non-adjustable Relief Valve problem can be remedied without disassembly and parts replacement.

Use the following procedure to release the valve seat....

a. Shut off the flow control valves for the vaporizer, nitrous oxide and oxygen gasses.
b. Slowly open the oxygen cylinder supply valve.
c. Open the Oxygen Flow Control Valve to approximately 0.4 L/min.
d. Use your hand to plug the outlet of the vaporizer.
e. While observing the Patient Circuit Pressure Gauge, allow the pressure to build to the maximum on the gauge scale, or until the gauge indicates that the relief valve has opened.

**CAUTION: Do not allow the gauge pressure to build beyond the maximum on the gauge scale. Damage to the gauge could occur.**

**CAUTION: Do not depress the $O_2$ Flush Valve button while the vaporizer output is occluded. Damage to the gauge could occur.**

f. If the preceding steps fail to release the Non-adjustable Relief Valve repeat steps d, e, and f and do the following....
   **Cautiously** insert a small screwdriver through one of the vent holes of the valve body. Press **gently** on the white plastic disc, moving it slightly toward the top of the relief valve (away from the vaporizer), while the pressure is building. The Non-adjustable Relief Valve should open and exhaust to the atmosphere.
g. Repeat steps d and e several times to ensure that the relief valve is relieving at the proper pressure, between 60 and 70 mm Hg, and closing properly without mechanical assistance.

If the preceding procedure fails to release the sticking valve, it will have to be disassembled for cleaning or repair. Figure 43, in the illustrated parts list section, shows an exploded view of the non-adjustable relief valve.

## 5.5 Repacking for Storage or Shipment

Do the following to repack the apparatus:

1. Make sure all flow control valves are closed.
2. Make sure the cylinder valves are closed.
3. Make sure the vaporizer control knob is OFF.
4. Make sure the vaporizer has been emptied.
5. Make sure the vaporizer funnel plug and drain spigot are tightened.
6. Empty the soda lime from the absorber canisters.
7. Remove the evacuation tubing from the gas evacuation/relief valve.
8. Make sure the APL valve is completely open (valve knob turned fully counterclockwise).
9. Disassemble the following items and place them in their appropriate storage locations within the carrying case (See Page 14). Make sure all apparatus items and components are clean and in good condition before they are repacked.

a. the supply hoses
b. the cylinder adapters (with protective closure devices installed)
c. the regulator assemblies (with protective closure devices installed)
d. the cylinder wrench and hex wrench
e. vials of replacement parts
f. the mask(s) and head strap
g. the mask elbow and Y-connector
h. the breathing tube(s)
i. the pediatric supply hose
j. the breathing bag(s)
k. the clipboard
l. the gas evacuation tubing
m. the socket wrenches
n. the flow calculator

10. Remove the small cylinders from the cylinder holder.
11. Remove the instrument tray and clip the U-bracket into its storage position.
12. Remove the cylinder holder and nest it within the instrument tray so that the ring and groove latch is at the same edge as the post sockets.
13. Place the instrument tray with the nested cylinder holder in its lower case storage location and fasten the hook-and-loop strap over the tray. The cylinder holder should be toward the floor of the case.
14. Replace Protective Closure Devices in

a. the regulator assemblies (if not previously done)
b. the cylinder adapters (if not previously done)
c. the control head inlets
d. the vaporizer outlet port
e. the exhalation check valve port

15. Make sure latches on the regulator assembly retainer panels and the lower case accessory compartment are closed.
16. Make sure the upper case central storage compartment is latched.
17. Remove either the set of casters or the set of glides as desired. Place the unused set within the lower case retaining clips.
18. Loosen the thumb bolt at the right support leg. *Make sure a firm hold is kept on the control head,* and remove the bolt from the slot in the support leg.
19. While keeping a steadying hold on the control head, allow it to swing down into place.
20. *Make sure a firm hold is kept on the absorber cross bar,* then pull abruptly forward on the nylon release strap extending from the base of the support stand.
21. While keeping a steadying hold on the cross bar, lower the apparatus into the case. Snap the short strap onto the control head.

    Note: To avoid having protective closure devices pulled out or off of their locations, make sure all retaining chains are kept free from catching on other parts of the apparatus.
22. Place the upper case in position over the lower case and close the four draw bolts.

## 5.6 Depot Repair/Service

It is recommended that the following procedures be undertaken at a depot repair center.

**A. Vaporizer Service**

Be certain that the liquid anesthetic agent has been drained from the vaporizer and that the residual agent has been dried out. See Section 3.3 for details on filling, draining and drying the vaporizer.

**WARNING: Never drain liquid anesthetic agent into an unmarked container. To prevent a serious accident, always drain the liquid into a container labelled for the same agent, e.g., drain a Halothane designated vaporizer into a Halothane anesthetic bottle, etc. with Ethrane and Forane.**

**WARNING: If the sight glass of the vaporizer is broken, the drained agent should be disposed of in a safe, environmentally acceptable manner.**

Replacing a broken sight glass for the vaporizer requires that certain items be available when disassembly and re-assembly takes place.

**B. Sight Glass Replacement:**

**Miscellaneous:**

1. A clean flat surface on which the vaporizer can be placed for disassembly and service. A minimum of two square feet is required.
2. Paper towels or clean shop towels to cover the work surface.

**Tools Required:**

1. Open-end Wrenches:

a. ½ inch, loosen compression fitting.
b. 11/16 inch, thermometer removal.
c. 15/16 inch, vaporizer assembly nut removal.
d. 1 5/16 inch, vaporizer disconnect (may use wrench from case)

2. Hex-Key Wrenches:

a. 3/16 inch, vaporizer disconnect.
b. ¼ inch, sight glass retainer removal.

3. Small screwdriver with thin, narrow blade.
4. Needle-nose pliers, gasket and broken glass removal.

**Essential Repair Parts:**

**(See Figure 25)**

1. Large "O"-ring, item 19, Figure 25, (3⅞ in. OD x 3¾ in. ID), (Stock No. 0210-0542-300, NSN 5310-00-433-9034), seals between the vaporizer body and control head assembly.
2. "O"-ring, item 4, Figure 25, (11/16 in.OD × 9/16 in ID), Stock No. 0210-0538-300, seals between vaporizer body and baffle assembly shaft.
3. Sight glass sealing gasket, Stock No. 0210-0372-300 (1).
4. Sight glass, Stock No. 0212-0161-300 (1).
5. Sight glass gasket, Stock No. 0210-0363-300 (2).

Note: Other parts may be required if complete disassembly is to be performed for thorough internal cleaning and worn parts replacement.

**Disassembly:**

1. Remove the vaporizer from the gas machine, see Figure 24.

a. Use the 1 5/16 inch open-end wrench to loosen the captive, union type connector, item A, between the machine and vaporizer. Do Not loosen entirely.
b. Use the ½ inch open-end wrench to remove the compression nut, item B, and allow it to slide down the metal "$O_2$ to Vaporizer" pipeline.
c. Use the 3/16 inch hex-key wrench to remove the socket-head screws, items C and D, from the vaporizer mounting arm, item E.
d. Support the vaporizer with one hand and loosen the captive, union type connector, item A, entirely and remove the vaporizer from the machine.

2. Lay the vaporizer down on the prepared, clean, working surface.
3. Use the 15/16 inch open-end wrench to remove the thermometer and set it aside for protection from damage.
4. Remove the vaporizer drain plug and captive security chain. Examine the threads on the plug for damage. If damaged, replace it with the spare, stored in the machine case and order a replacement spare (Stock No. 0216-1375-500). If undamaged, set the plug aside for reassembly.
5. Use the 15/16 inch open-end wrench to remove the nut, item 1, from the bottom of the vaporizer. This nut releases the entire internal baffle assembly, see Figure 25.
6. Grip the vaporizer body, item 2, Figure 25, with one hand and gently lift upward on the top portion control head assembly, item 20, Figure 25. The control head of the vaporizer and the internal baffle assembly comes out of the vaporizer body in one piece.
7. Set the control head and baffle assembly aside on a *Clean* surface.
8. Use the ¼ inch hex-key wrench to remove the threaded sight glass retaining plug, item 21, Figure 26.
9. Use the needle-nose pliers to remove any remaining broken glass and to remove the seal adapter, item 22 , Figure 26.

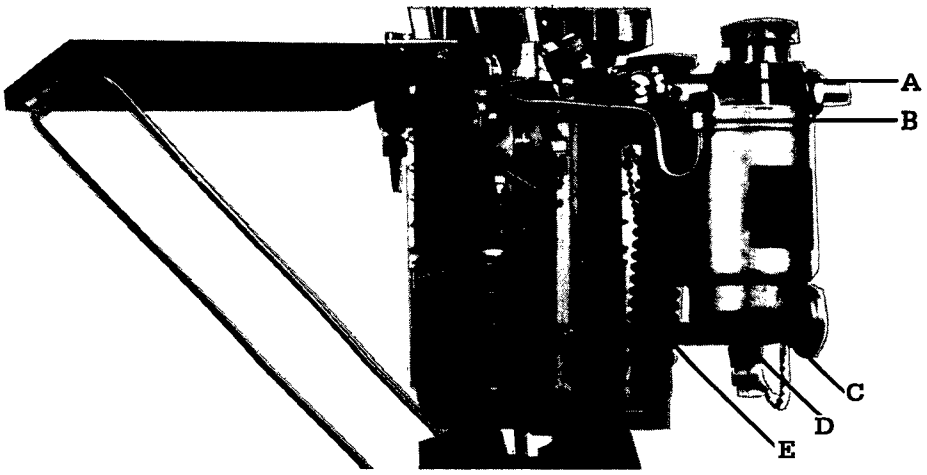


**Figure 24**
Removing the Vaporizer from the Gas Machine

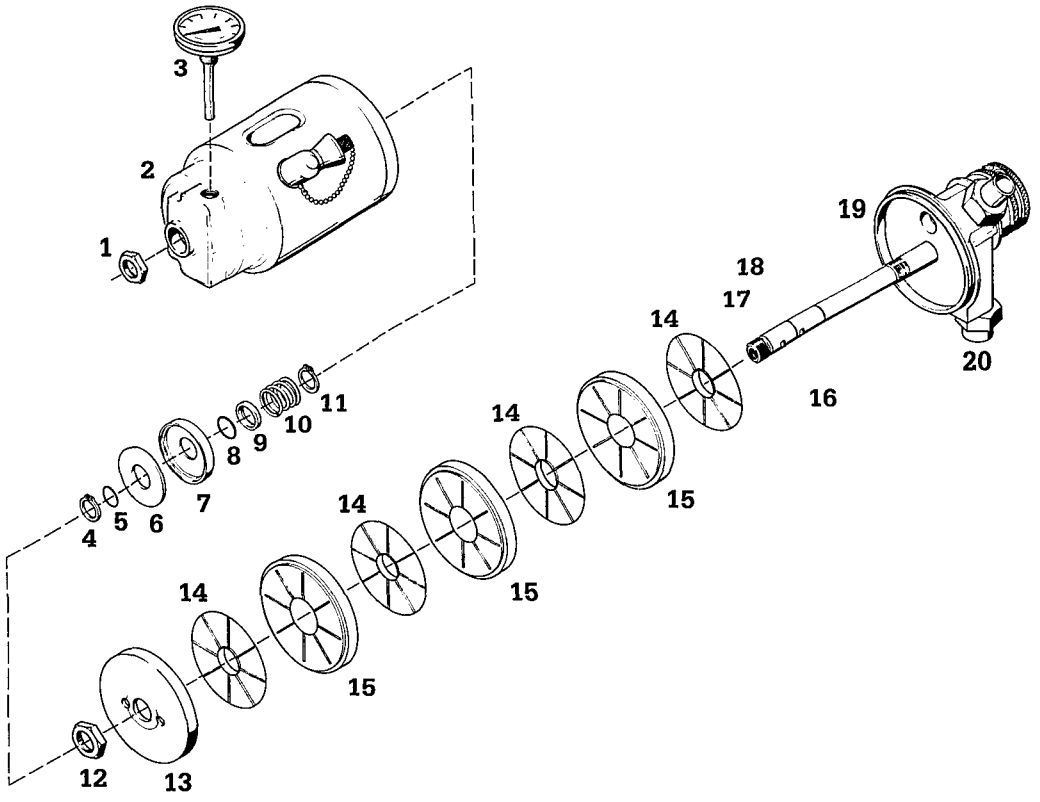


**Figure 25**
Anesthetic Vaporizer Assembly

10. Use the needle-nose pliers to remove the sealing gasket, item 23, Figure 26. Discard this gasket, it must be replaced by a new one each time the sight glass is removed due to breakage or for cleaning.

11. Turn the vaporizer body upside down on a clean paper towel. The plastic gaskets, items 24 and 26, Figure 26, should drop out. If they do not, use the small, thin blade screwdriver to lift them from their seats and assist in removal.

12. Examine the plastic gaskets for damage. If they are undamaged, set them aside for reassembly. If they are damaged order replacements, Stock No. 0210-0363-300, NSN 5310-00-433-9035.

**Reassembly:**

Reassembly is the reverse order of disassembly. Be sure to replace the "O"-rings, items 4 and 19, Figure 25 and the sight glass sealing gasket, item 23, Figure 26.

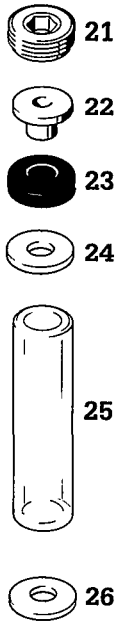


**Figure 26**
Site Glass Assembly

**C. Complete Service and Cleaning:**

**Vaporizing Chamber Components**

Some anesthetic agents contain stabilizers which may build up in the vaporizer chamber and baffles after extended periods of use. For example, halothane contains the stabilizer thymol. Vaporizers dedicated to halothane use or other agents containing stabilizers may have to be disassembled for cleaning of internal baffles periodically. For Anesthesia Gas Machines in service, routine disassembly for inspection and cleaning is recommended yearly.

**Tools Required:**

In addition to the tools required for "Sight Glass Replacement", an external Retaining Ring Pliers and a 1 inch open-end wrench are required. A quantity of 95 – 100 percent ethyl alcohol will be required for soaking parts to remove deposits.

**Essential Repair Parts:**

**(See Figure 25):**

1. "O"-Ring, item 4 (Stock No. 0210-0538-300)
2. "O"-Ring, item 8 (Stock No. 0210-0544-300)
3. "O"-Ring, item 19 (Stock No. 0210-0542-300)

**Disassembly:**

**(See Figure 25)**

1. Repeat steps 1 through 6 from the procedure for Sight Glass Replacement.
2. Unless the sight glass has been shown to be leaking, there is no need to disassemble it.
3. Set the control head and baffle assembly on a clean work surface for disassembly.
4. Remove "O"-Ring, item 4, from assembly shaft.
5. With thumb and fingers, compress the spring, item 10, by forcing the washer, item 6 and other parts, against the upper retaining ring, item 11.
6. Use external Retaining Ring Pliers to remove the external retaining ring, item 5, from the shaft.
7. *Slowly* release the tension on the spring and slide items 6, 7, 8, 9, and 10 off the assembly shaft. Items 6 and 7 appear to be a single assembly because of the close tolerances where they fit together. These items must be taken apart for soaking in the ethyl alcohol.
8. Remove the upper Retaining Ring, item 11, with the Retaining Ring Pliers.
9. Remove the Hex Nut, item 12, from the shaft using the 1 inch open-end wrench. Items 13, 14, 15, and remaining baffles will now slip off of the assembly shaft.

**WARNING: It is very important that all items be reassembled in the order that they were disassembled.**

10. Inspect the baffles and other parts for deposits and damage.
11. Soak all parts, removed from the assembly shaft, in a solution of 95 – 100 percent ethyl alcohol for a minimum of 20 minutes to remove the deposits.
12. Check the vaporizing chamber in the body for deposits. If deposits are found:

a. Replace the thermometer or plug the mounting hole with a ¼ inch NPT pipe-plug.
b. Replace the drain plug.
c. Secure the vaporizer body in a stable, upright position.
d. Fill the vaporizing chamber with ethyl alcohol and allow it to soak for a minimum of 20 minutes.

**Do Not soak the control head and shaft assembly.**

13. It may be necessary to agitate the parts or brush them with a soft brush to remove the more stubborn residue.

    Do Not scrape any parts to remove deposits. If deposits can not be remove by soaking and brushing, replace the parts.
14. After soaking the parts in alcohol and cleaning them, allow them to air-dry for approximately one hour prior to reassembly.

**Reassembly:**

1. Reassembly is the reverse order of disassembly.
2. Be sure to replace the "O"-rings, items 4, 8 and 19.
3. Replace any baffles which have deposits that cannot be removed.

   Note: It is recommended that all the plastic baffles be replaced as a set if one or more can not be cleaned by soaking and brushing.

**D. Control Head Assembly Parts**

**(See Figure 27)**

**General:**

Repair of this part of the vaporizer should not be attempted unless it is determined that there is an unacceptable leak in the Control Head Assembly.

**WARNING: Do not attempt to disassemble the Control Head Knob-Assembly (see item 3, Figure 27). This assembly requires special and intricate alignment procedures.**

**Important:**

The slot in the valve shaft and the "key" inside the Control Valve Knob-Assembly must be aligned properly as shown in the Top View Alignment Detail, Figure 27. The 3/16 inch index hole in the Control Valve Knob-Assembly flange must also be aligned as shown in the top view detail Figure 27.

**Tools:**

The only tool required for this procedure is a No. 2 Phillips Screwdriver. The Control Head can be disassembled while the vaporizer is on the gas machine. If the vaporizer has been, or must be removed from the machine, the tools listed under "Vaporizer Chamber Components" must be available.

**Essential Repair Parts.**

1. "O"-Ring, item 9 (Stock No. 0210-0533-300)
2. "O"-Ring, item 11 (Stock No. 0210-534-300)

**Disassembly:**

1. If the vaporizer is mounted on the gas machine, ensure that:

a. all cylinders are disconnected
b. vaporizer has been drained
c. vaporizer has been dried of residual agent
d. there is a clean area available for disassembly and inspection of internal parts.

2. Set the control knob to the **ON** position.
3. Use the No 2 Phillips-head screwdriver to loosen the four Phillips-head screws on the flange of the Control Head Knob-Assembly.

   Note: The upper portion of the assembly is lightly spring-loaded.

4. Remove the screws one at a time while gently pushing down on the knob assembly.
5. Remove the assembly using care to keep the components enclosed within the upper part. Set the screws aside for reassembly.
6. Set the assembly on the clean work area and remove the internal parts.

**CAUTION: Do not move the Control Knob from the ON position. This alignment is vital for proper reassembly.**

7. Use care when removing the internal parts. The small spring, item 5, is easily lost.
8. Inspect parts for wear.

**See Figure 27**

a. Item 4 consists of four, phosphor bronze, spring washers. To check these items simply lay them on a smooth flat surface and determine that there is a curved bend ("warp") to each washer. If there is no warp, they should be replaced.
b. Item 5 is a small coil spring. Check to determine that it is flush with the top of the valve shaft when it is installed into its hole (see item 8).
c. Item 9 is an "O"-Ring and must be replaced when the Control Head is disassembled. If this "O"-Ring is worn or damaged, it could be the possible cause of an unacceptable leak. When placing the "O"-Ring apply a thin coat of Vac Kote.
d. Item 10 is the control valve. Check the surface which contacts the ports, item 12. Both surfaces should be smooth and unblemished.
e. Item 11 is an "O"-Ring and must be replaced when the Control Head is disassembled. If this "O"-Ring is worn or damaged, it could be the possible cause of an unacceptable leak. When placing the "O"-Ring apply a thin coat of Vac Kote.

**Reassembly:**

Reassembly is the reverse of disassembly. *Be certain that the "O"-Rings are replaced and specified alignment indicators are properly oriented.*

**WARNING: Improper orientation and alignment of parts during reassembly will render the vaporizer dangerous to patients if it is used.**

## 5.7 External Leak Test for the Vaporizer

**WARNING: Do not use the vaporizer without verifying its correct operation. This test should be performed when ever the vaporizer has been disassembled or repaired.**

**WARNING: Do not use a damaged or malfunctioning vaporizer.**

The test procedures in this chapter are applicable to the vaporizer only and should be conducted in the sequence listed.

1. Remove the vaporizer from the gas machine.
2. Connect the test equipment to the vaporizer as shown in Figure 28.
3. Close the drain cock.
4. Turn the vaporizer control knob to the **ON** position.
5. Close the needle valve.
6. Turn on the oxygen supply.
7. Slowly open the needle valve and pressurize the vaporizer to 100 mm Hg.
8. Close the needle valve. The pressure should not fall more than 10 mm Hg in one minute.
9. In case of failure, check the tubing and plugs for tight seals. Check the vaporizer's drain cock, seals and o-rings.

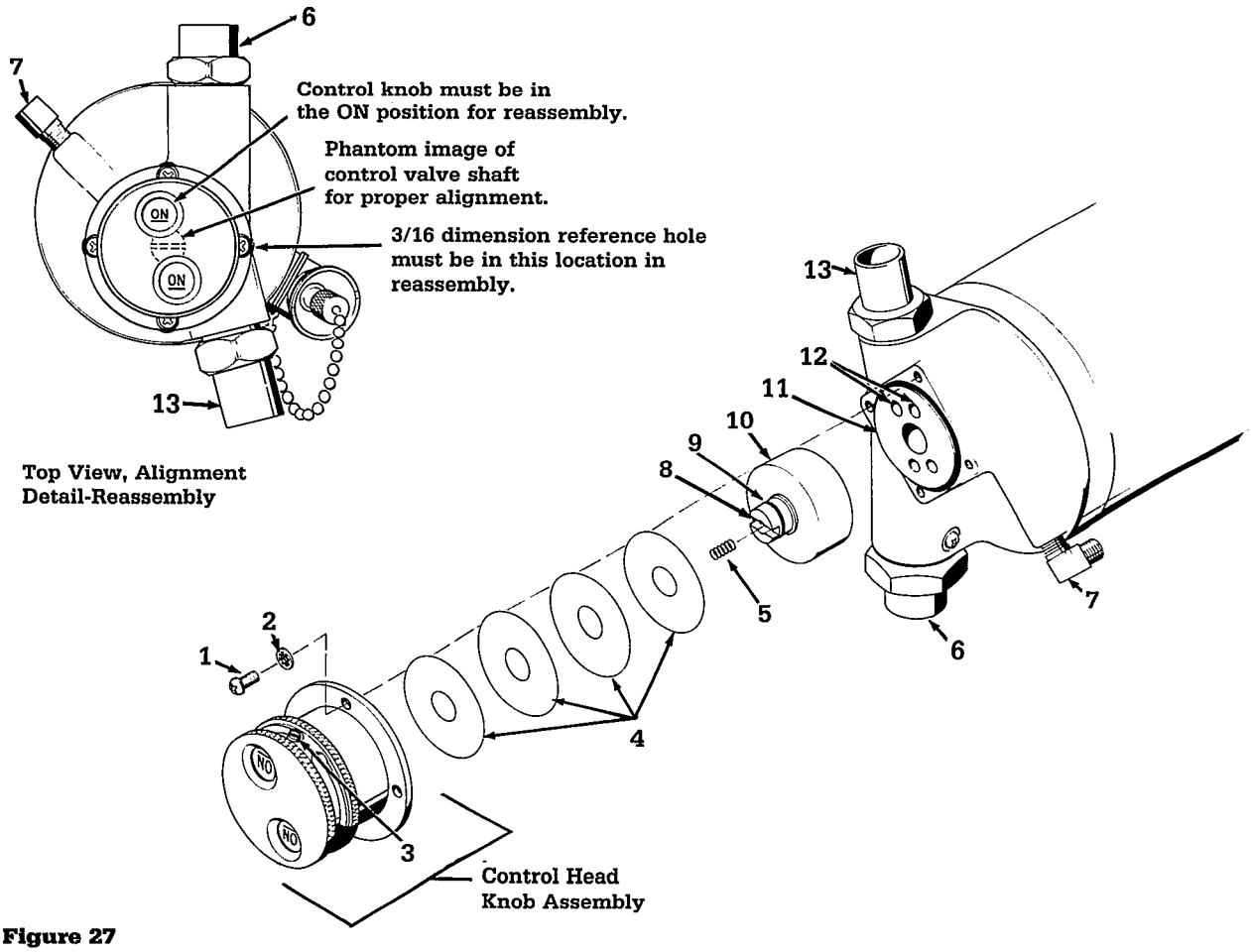


**Figure 27**
Control Head Assembly

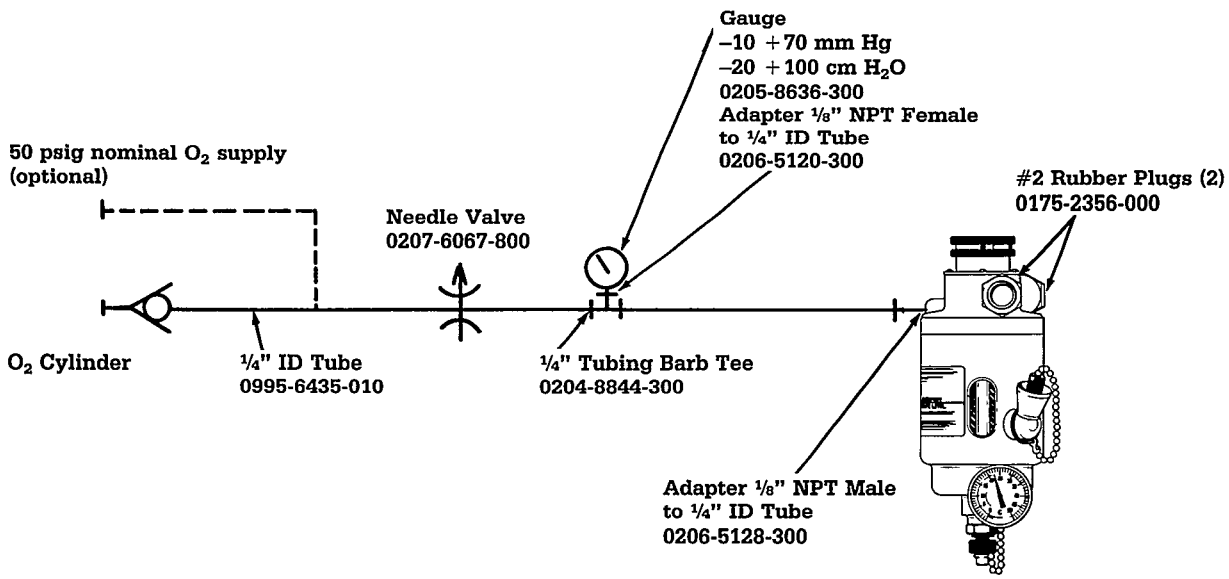


**Figure 28**
External Leak Test

## 5.8 Flow Capacity Test for the Vaporizer

**WARNING: Do not use the vaporizer without verifying its correct operation. This test should be performed when ever the vaporizer has been disassembled or repaired.**

**WARNING: Do not use a damaged or malfunctioning vaporizer.**

The test procedures in this chapter are applicable to the vaporizer only and should be conducted in the sequence listed.

1. Remove the vaporizer from the gas machine.
2. Connect the test equipment to the vaporizer as shown in Figure 29.
3. Close the drain cock.
4. Turn the vaporizer control knob to the ON position.
5. Close the needle valve.
6. Turn on the oxygen supply.
7. Slowly open the needle valve to produce a flow of 10 L/min on the flowmeter.
8. Disconnect the flowmeter from the vaporizer. The pressure gauge should not exceed 10 mm Hg.
9. In case of failure, check for obstructions in the flow path of the vaporizer.

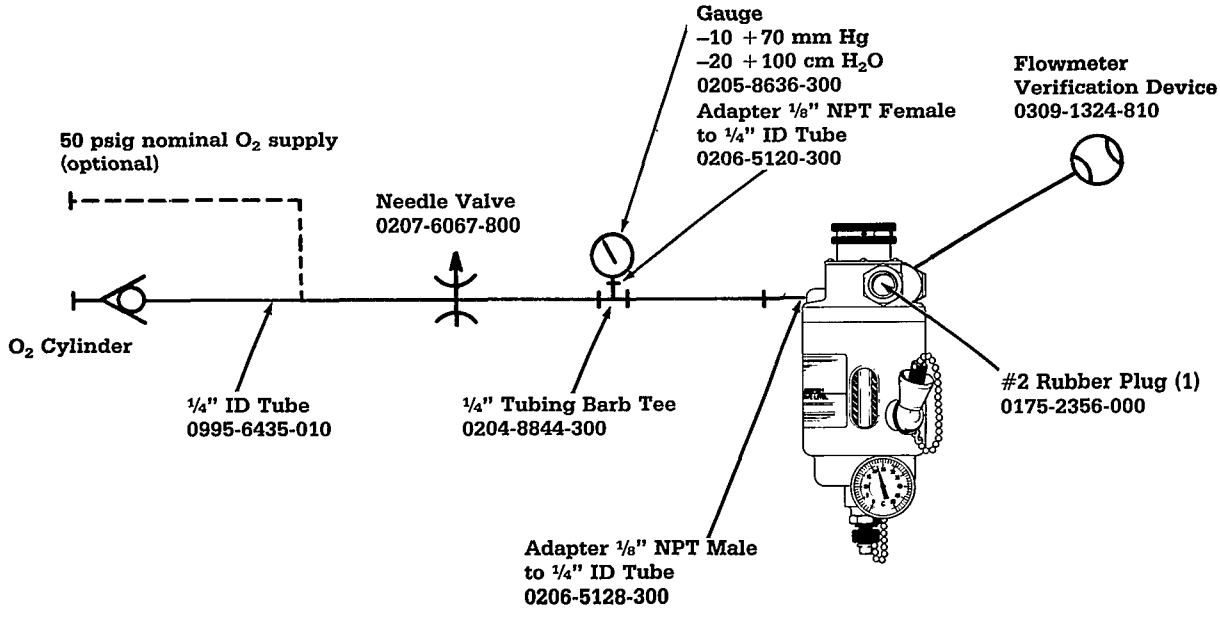


**Figure 29**
Flow Capacity Test

## 5.9 Absorber Control Head Body Gasket Replacement:

**WARNING: Scotch-Grip* 3M High Performance Contact Adhesive 1357 is extremely flammable. Vapors may ignite explosively and cause flash fire. Vapors are harmful. Use only with cross-ventilation.**

1. Pull the absorber crossbar upward until the support arms lock in an upright position.
2. Loosen the clamp screw under the absorber crossbar. Remove the canisters.
3. Remove the old gasket.
4. Clean both the control head body and new gasket with ethyl alcohol.
5. Stir Scotch-Grip 3M High Performance Contact Adhesive 1357 (Ohmeda Stock No. 0220-5203-300) thoroughly.
6. Using a brush apply a uniform coat of adhesive to the control head body.
7. Place the new gasket into the groove of the control head body and firmly press down on the gasket all the way around.
8. Use ethyl alcohol to clean excess adhesive from the control head body and gasket.
9. Replace the absorber canisters so that they are properly aligned, then tighten the clamp screw to seal the canisters against the control head body.

**CAUTION: Do not over-tighten the clamp screw under the absorber crossbar. Over-tightening could cause canisters to warp resulting in gas leakage.**

10. Allow the adhesive to dry for 15 minutes or until the adhesive is no longer tacky to the touch.

    Note: Drying time will vary depending on temperature, humidity and air movement.

11. Perform the Leak Test Procedure in Section 4.2 C after replacing the gasket.

* Scotch-Grip is a registered trademark of Adhesives, Coating and Sealers Division/3M.

## 5.10 Canister Gasket Replacement:

**WARNING: Scotch-Grip 3M High Performance Contact Adhesive 1357 is extremely flammable. Vapors may ignite explosively and cause flash fire. Vapors are harmful. Use only with cross-ventilation.**

1. Pull the absorber crossbar upward until the support arms lock in an upright position.
2. Loosen the clamp screw under the absorber crossbar. Remove the canisters.
3. Remove the defective gasket from the canister.
4. Clean both the canister and new gasket with ethyl alcohol.
5. Stir Scotch-Grip 3M High Performance Contact Adhesive 1357 (Ohmeda Stock No. 0220-5203-300) thoroughly.
6. Using a brush apply a uniform coat of adhesive to the canister.
7. Place the new gasket on the canister and firmly press down on the gasket all the way around.
8. Use ethyl alcohol to clean excess adhesive from the canister and gasket.
9. Allow the adhesive to dry for 15 minutes or until the adhesive is no longer tacky to the touch.

   Note: Drying time will vary depending on temperature, humidity and air movement.

10. Perform the Leak Test Procedure in Section 4.2 C after replacing the gasket.

Before operating the anesthesia apparatus with the oxygen monitor read the Ohmeda 5120 Oxygen Monitor Operation and Maintenance Manual (Stock No. 0178-1757-000).

## 6.1 Description

Later models of the 885A include an Ohmeda 5120 Oxygen Monitor. The monitor and batteries are stored in a small case mounted on the instrument tray within the apparatus carrying case. A hook and loop fastening strap holds the case closed. The monitor's sensor cartridge, sensor tee and cable assembly are stored in other compartments within the carrying case.

This section explains how to unpack, set up and store the monitor and associated parts. It also explains how to use the monitor during the preoperative check of the anesthesia apparatus.

Read the Ohmeda 5120 Oxygen Monitor Operation and Maintenance Manual for complete instructions before operating the monitor.

**Sensor Life Expectancy**

The service life of this high-quality oxygen sensor is affected by storage time and conditions, as well as the percent oxygen the sensor is exposed to while in service.

This sensor will typically function for approximately 438,000 percent hours. For example, it would typically last for one year at 50% oxygen or 6 months at 100% oxygen. (Continuous exposure to $CO_2$ may also shorten the expected life of the sensor.

**Sensor Storage**

This sensor is packaged in an inert atmosphere to maximize shelf-life. Do not puncture or open the package prior to placing the sensor in service.

This sensor has a finite shelf-life which will vary depending on storage conditions. Reduced temperatures and increased relative humidity will help prevent the sensor from drying out and, thus, enhance its shelf-life. Place unopen sensors in a refrigerator (Temp. 6°C ± 3 C) should extend the shelf-life. **Do Not Freeze.**

## 6.2 Unpacking

To unpack the oxygen monitor:

**See Figure 30.**

1. Follow steps 1 through 5a in Section 3.1 of this manual.
2. Open the hook and loop fastening strap which holds the monitor case closed.
3. Pull the strap out of the slot at the end of the monitor case.

**See Figure 31.**

4. Lift the case cover upward and remove the monitor and batteries (stored in a plastic vial) and set them safely aside.
5. Place the empty plastic vial back in the case and strap the case cover closed.

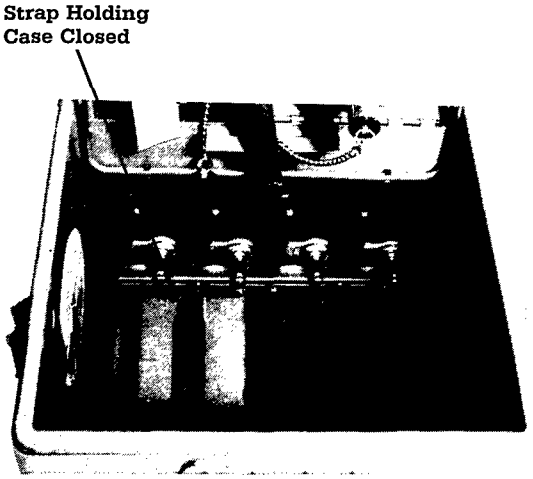


**Figure 30**
Opening the Hook and Loop Fastening Strap

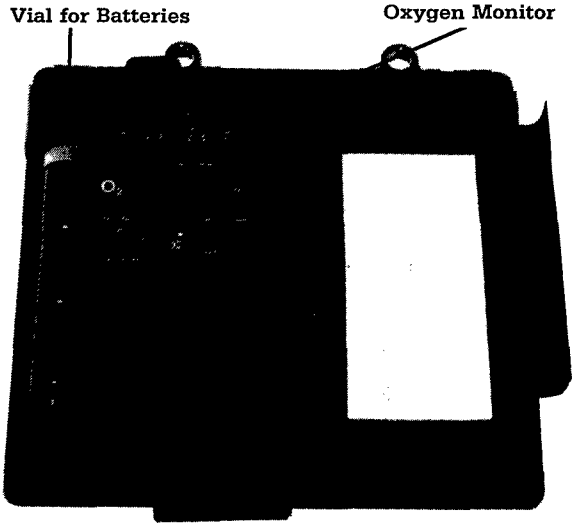


**Figure 31**
Removing the Monitor and Batteries

**See Figure 32**

6. Locate the oxygen monitor mounting bracket on the post behind the flowmeter panel.
7. Use the 3/16" hex wrench (stored in the latched compartment at the base of the control head stand) to loosen the set screw in the "wrench-shaped" portion of the bracket.
8. Remove the bracket from the post and set the bracket safely aside.
9. Proceed with steps 5b through 13e in Section 3.1 of this manual.

**See Figure 33**

10. Remove the sensing cable assembly and sensing tee from the latched compartment at the base of the control head stand. Set these items safely aside.
11. Remove the sensor cartridge from the box stored beside the mask storage posts in the uncovered compartment at the base of the control head stand. Set the cartridge safely aside. Save the original shipping containers for future use.

Proceed with the setup as explained in the following section.

**Figure 32**
Oxygen Monitor Mounting Bracket

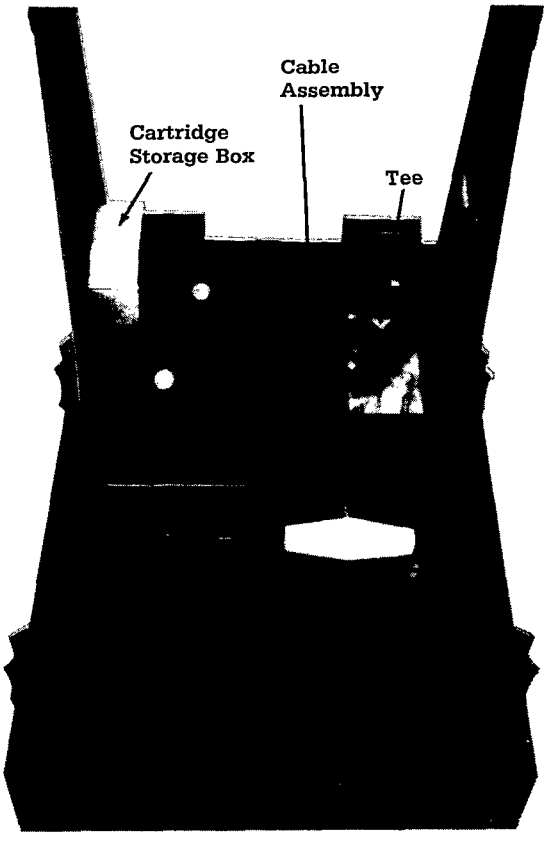


**Figure 33**
Sensing Cable Assembly and Sensing Tee

## 6.3 Setup

1. Install the monitor batteries as described in the monitor's operation and maintenance manual.

**See Figure 34**

2. Install the oxygen monitor mounting bracket as follows:

a. Position the wrench-shaped portion of the bracket on the post behind the flowmeter panel so that the straight portion of the bracket extends beyond the left side of the flowmeter panel (as viewed from the back).
b. Tighten the set screw to secure the bracket in place.

3. Align the threaded hole in the back of the monitor with the socket head screw extending from the front of the bracket.
4. Hold the monitor securely while threading the screw into the monitor back.
5. Install the sensor cartridge in the probe as described in the monitor's operation and maintenance manual.
6. Align the cable connector with the modular jack in the monitor's back panel and gently push the connector into the jack. The release tab should snap into place.

**See Figure 35**

7. Fit the 22 mm OD leg of the sensor tee over the nipple extending from the vaporizer so that the sensor port points up.
8. Fit the sensor probe into the sensor port.
9. Perform the preoperative checkout procedure given in the monitor's operation and maintenance manual.
10. Assemble the desired breathing circuit as explained in Section 3.2.

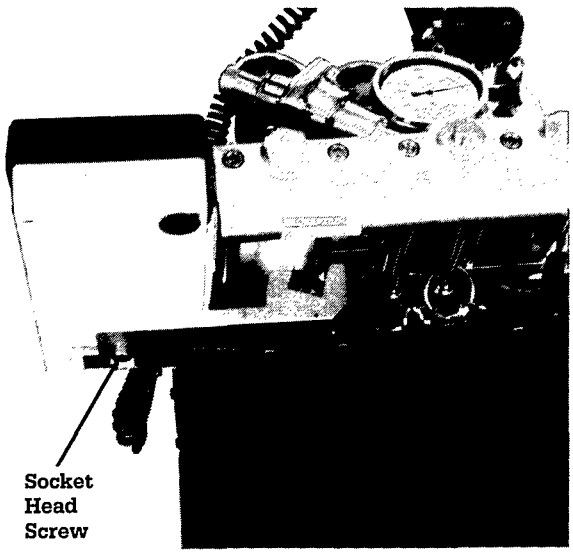


**Figure 34**
Mounting the Oxygen Monitor Mounting Bracket

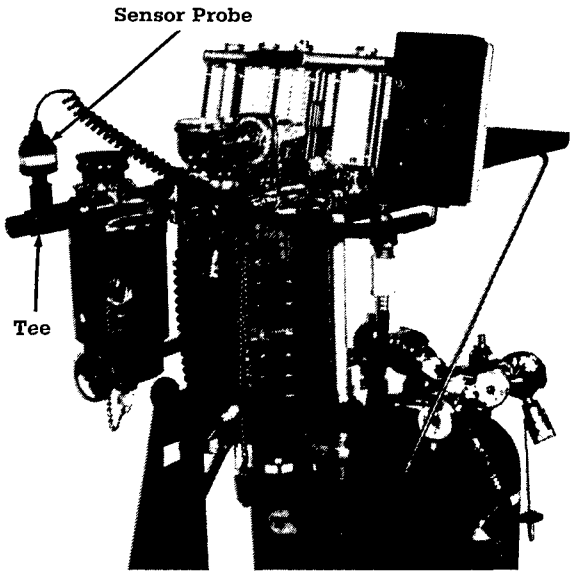


**Figure 35**
Placing the Sensor Probe in the Tee

## 6.4 Checkout Using the Oxygen Monitor: Oxygen Flow Verification

Note: The importance of a reliable supply of oxygen for the patient cannot be overemphasized. Before each use of the anesthesia apparatus, verify that oxygen flow is unrestricted, and that oxygen is, in fact, the gas being delivered.

1. Make sure that:

a. the oxygen monitor is correctly calibrated.
b. the oxygen monitor sensor cable is correctly connected.
c. the oxygen monitor sensor cartridge is correctly installed.
   Note: Check the sensor cartridge package. Cartridge life is approximately one year from when the cartridge is removed from its sealed container. See the oxygen monitor operation and maintenance manual for further information.
d. the oxygen monitor sensor tee and probe are correctly installed in the inhalation limb of the patient circuit.
e. the vaporizer and flow control valves are turned off.

2. Slowly open the cylinder gas supplies.
3. Open the oxygen flow control valve. Gas must be adjustable to full scale.
4. Observe that the oxygen monitor shows 100% oxygen at all levels flow.

   Note: At low flows residual gas may require a little time to be flushed out of the circuit. Make allowance for this.

5. Close the oxygen flow control valve.
6. Repeat steps 3 through 5 for Oxygen through the Vaporizer.
7. Open the nitrous oxide flow control valve. Gas must be adjustable to full scale. No oxygen content should be shown on the oxygen monitor. It is important that nitrous oxide be properly evacuated during this verification.
8. Close the nitrous oxide flow control valve.
9. Depress the Oxygen Flush button. A steady gas flow must occur at the outlet, and the oxygen monitor must show 100% oxygen.

If these conditions are not observed, the anesthesia apparatus requires repair.

## 6.5 Routine Maintenance for the Oxygen Monitor

Follow instructions given in the Ohmeda 5120 Oxygen Monitor Operation and Maintenance Manual.

## 6.6 Repacking for Storage

To repack the oxygen monitor for storage.

1. Remove the sensor probe from the sensor socket.
2. Disconnect the sensor cable from the monitor.
3. Remove the sensor cartridge from the sensor probe. Place the sensor cartridge in the original plastic container with the three gold-colored terminal rings making contact with the foil. Tape the plastic container closed. This will prevent oxidation of the terminals.
4. Remove the sensor tee from the exhalation port.
5. Return the sensor cable assembly, cartridge and tee to their proper storage compartments within the carry case.
6. Remove the monitor from the mounting bracket.
7. Remove the batteries from the monitor.
8. Unstrap the monitor case cover:

a. Return the batteries to the plastic vial.
b. Place the monitor and batteries in the monitor case.
c. Strap the monitor case cover closed.

9. Loosen the bracket set screw and pivot the bracket back to its storage position. Tighten the set screw.

## 6.7 Replaceable Parts

| Description | Ohmeda Stock No. |
|---|---|
| Strap | 0203-1488-300 |
| Set Screw | 0400-3151-300 |
| Cap Screw | 0400-1099-500 |
| Retaining Ring | 0203-5230-300 |
| $O_2$ Monitor | 0304-2178-800 |
| Sensor Cartridge | 0237-2034-700 |
| Cable Assembly | 0237-2030-700 |
| Sensor Tee | 0212-0763-100 |
| Battery 1.5V "C" | 0208-1502-300 |

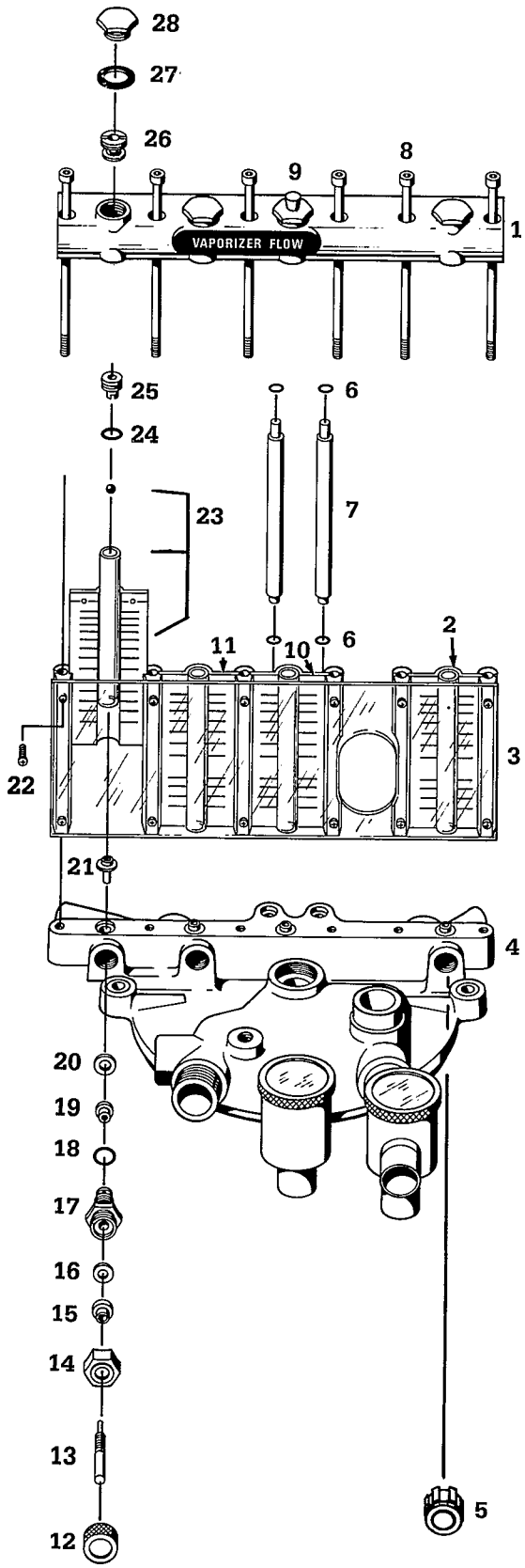


| Description and (Qty.) | Ohmeda Stock No. | National Stock No. |
|---|---|---|
| 1. Manifold, Top (1) | 0216-1398-700 | - - - - - - - - - |
| 2. Kit $O_2$ Flowmeter Scale, Flowtube #1, w/Float (1) | 0216-6478-802 | - - - - - - - - - |
| 3. Shield, Flowmeter (1) | 0212-1015-300 | - - - - - - - - - |
| 4. Head, Control Body (1) | 0219-1727-742 | - - - - - - - - - |
| 5. Knob, Touch-Coded (Fluted), Oxygen Only (1) | 0207-0069-530 | - - - - - - - - - |
| 6. O-Ring (4) | 0210-0687-300 | - - - - - - - - - |
| 7. Sleeve (2) | 0216-1391-535 | - - - - - - - - - |
| 8. Screw, Cap ¼-20 (6) | 0400-3124-300 | - - - - - - - - - |
| 9. Cap,Sealing w/Snap (1) | 0216-1388-535 | - - - - - - - - - |
| 10. Kit, $O_2$ for Vapor. Hi-flow Containing: Scale $O_2$ for Vaporizer (Yellow), Flowtube #5 w/Float (1) | 0216-6478-800 | - - - - - - - - - |
| 11. Kit, $O_2$ for Vapor. Lo-flow Containing: Scale $O_2$ for Vaporizer (Yellow), Flowtube #4 w/Float (1) | 0216-6478-801 | - - - - - - - - - |
| 12. Knob, Knurled Flow Control Valve (2) | 0207-0066-535 | - - - - - - - - - |
| 13. Stem, Flow Control Valve (3) | 0207-0068-300 | 6515-00-933-5112 |
| 14. Nut, Packing (3) | 0402-1624-535 | - - - - - - - - - |
| 15. Bonnet, Flow Control Valve (3) | 0207-5376-500 | - - - - - - - - - |
| 16. Gasket (3) | 0210-5226-300 | - - - - - - - - - |
| 17. Stud, Flow Control Valve (3) | 0207-5391-535 | 6515-00-933-5114 |
| 18. O-Ring (3) | 0210-0598-300 | 5330-00-933-5365 |
| 19. Seat, Flow Control Valve (3) | 0207-5384-700 | 6515-00-933-5113 |
| 20. O-Ring (3) | 0210-0580-300 | 6515-00-933-5115 |
| 21. Stop, Lower (4) | 0216-1395-500 | - - - - - - - - - |
| 22. Screw, 8-32 (12) | 0140-6127-105 | - - - - - - - - - |
| 23. Kit, $N_2O$ Flowmeter Scale, Flowtube #2, w/Float (1) | 0216-6478-803 | 6515-00-933-5129 |
| 24. O-Ring (4) | 0210-0598-300 | 5330-00-933-5365 |
| 25. Stop, Float (4) | 0216-1341-500 | - - - - - - - - - |
| 26. Sleeve, Sealing (4) | 0216-1342-400 | - - - - - - - - - |
| 27. Gasket, Sealing Cap (4) | 0210-5240-300 | 5330-00-926-9240 |
| 28. Cap, Sealing (3) | 0216-1343-535 | - - - - - - - - - |

**Figure 36**
Control Head

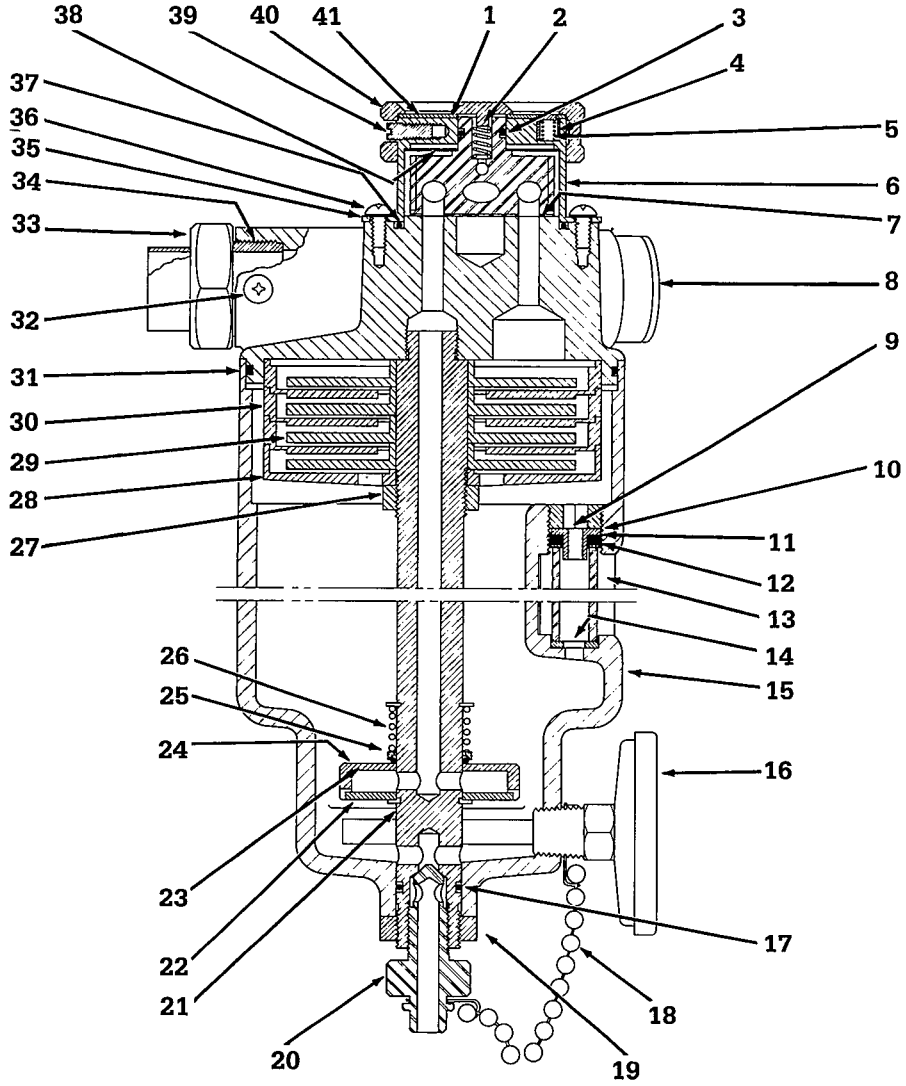


| Description and (Qty.) | Ohmeda Stock No. | National Stock No. |
|---|---|---|
| 1. Vaporizer ON-OFF Control Dial (1) | 0205-2105-300 | - - - - - - - - - |
| 2. Spring (1) | 0203-3058-300 | - - - - - - - - - |
| 3. O-Ring (1) | 0210-0533-300 | - - - - - - - - - |
| 4. Cap, Spring (3) | 0216-1378-500 | - - - - - - - - - |
| 5. Spring (3) | 0203-3058-300 | - - - - - - - - - |
| 6. Cap, Vaporizer Valve (1) | 0216-1380-535 | - - - - - - - - - |
| 7. Valve (1) | 0216-1396-700 | - - - - - - - - - |
| 8. Head, Vaporizer (1) | 0216-1399-742 | - - - - - - - - - |
| 9. Nut, 9/16-27M (1) | 0216-1871-500 | - - - - - - - - - |
| 10. Adapter (1) | 0216-1928-540 | - - - - - - - - - |
| 11. Gasket (1) | 0210-0372-300 | 5310-00-433-8034 |
| 12. Gasket (1) | 0210-0363-300 | 5310-00-433-9035 |
| 13. Tube, Liquid Level Indicator (1) | 0212-0161-300 | - - - - - - - - - |
| 14. Gasket (1) | 0210-0363-300 | 5310-00-433-9035 |
| 15. Chamber, Vaporizing (1) | 0216-1397-743 | - - - - - - - - - |
| 16. Thermometer, Dial (1) | 0205-8811-300 | - - - - - - - - - |
| 17. O-Ring (1) | 0210-0538-300 | - - - - - - - - - |
| 18. Chain, Bead (1) | 0203-0050-700 | - - - - - - - - - |
| 19. Nut, Hex 11/16-20 (1) | 0402-1777-535 | - - - - - - - - - |
| 20. Drain Plug (1) | 0216-1375-500 | - - - - - - - - - |
| 21. Ring, Truarc (2) | 0203-5216-300 | - - - - - - - - - |
| 22. Washer (1) | 0402-1108-335 | - - - - - - - - - |
| 23. O-Ring (1) | 0210-0544-300 | - - - - - - - - - |
| 24. Ring Diffuser (1) | 0216-1376-535 | - - - - - - - - - |
| 25. Ring, Seal Loading (1) | 0216-1379-535 | - - - - - - - - - |
| 26. Spring Compression (1) | 0203-3710-300 | - - - - - - - - - |
| 27. Nut, Hex 3/4-20 (1) | 0402-1778-535 | - - - - - - - - - |
| 28. Clamp Baffle (1) | 0216-1377-535 | - - - - - - - - - |
| 29. Baffle, Inner (4) | 0212-1201-100 | - - - - - - - - - |
| 30. Baffle, Outer (3) | 0212-1200-100 | - - - - - - - - - |
| 31. O-Ring (1) | 0210-0542-300 | - - - - - - - - - |
| 32. Screw, 8-32 x 3/8 (1) | 0140-6127-105 | - - - - - - - - - |
| 33. Union Unit (1) | 0204-6679-535 | - - - - - - - - - |
| 34. Union Stud (1) | 0204-8151-300 | - - - - - - - - - |
| 35. Lock Washer (4) | 0202-3436-300 | - - - - - - - - - |
| 36. Screw, 8-32 x 5/16 (4) | 0140-6127-105 | - - - - - - - - - |
| 37. O-Ring (1) | 0210-0534-300 | - - - - - - - - - |
| 38. Washer, Spring (AR*) | 0402-1109-300 | - - - - - - - - - |
| 39. Screw, Stop (3) | 0402-1522-500 | - - - - - - - - - |
| 40. Knob, Vaporizer (1) | 0216-1381-300 | - - - - - - - - - |
| 41. Disc, Label Mounting (1) | 0210-6914-300 | - - - - - - - - - |

* AR Specify Amount Required

**Figure 37**
Anesthetic Vaporizer, 0309-2002-800

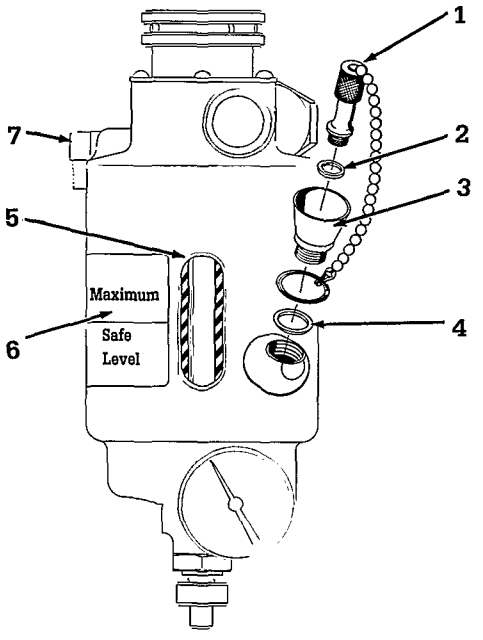


| Description and (Qty.) | Ohmeda Stock No. | National Stock No. |
|---|---|---|
| 1. Funnel Plug (1) | 0216-1925-700 | - - - - - - - - - |
| 2. O-Ring, Funnel Plug (1) | 0210-0580-300 | 6515-00-933-5115 |
| 3. Funnel (1) | 0216-1027-531 | - - - - - - - - - |
| 4. Gasket Funnel (1) | 0210-5237-300 | 5330-00-435-8950 |
| 5. Label, Background Liquid Level Indicator (1) | 0205-2107-300 | - - - - - - - - - |
| 6. Label, Sight-Glass (1) | 0205-4451-300 | - - - - - - - - - |
| 7. Elbow, ¼ Tube Compression (1) | 0413-8567-335 | - - - - - - - - - |

**Figure 38**
Anesthetic Vaporizer, Detail for Figure 37

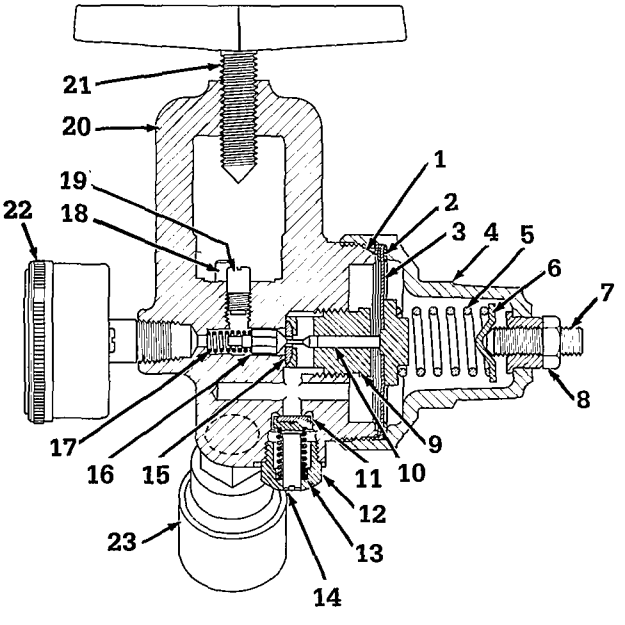


| Description and (Qty.) | Ohmeda Stock No. | National Stock No. |
|---|---|---|
| 1. Gasket (1) | 0210-5349-325 | - - - - - - - - - |
| 2. Ring, Slip (1) | 0830-2677-325 | - - - - - - - - - |
| 3. Diaphragm (1) | 0210-7233-725 | - - - - - - - - - |
| 4. Case, Spring Assembly (1) | 0830-1774-325 | - - - - - - - - - |
| 5. Spring, Regulator (1) | 0830-1691-325 | - - - - - - - - - |
| 6. Button, Spring (1) | 0830-1689-325 | - - - - - - - - - |
| 7. Screw, Set 5/16-18 (1) | 0141-4140-132 | - - - - - - - - - |
| 8. Nut, Hex 5/16-18 (1) | 0144-3340-113 | - - - - - - - - - |
| 9. Retainer (1) | 0830-3247-325 | - - - - - - - - - |
| 10. Pin, Regulator (1) | 0206-0169-525 | - - - - - - - - - |
| 11. Seat, Valve (1) | 0206-0152-325 | - - - - - - - - - |
| 12. Cap, Relief Valve (1) | 0830-0882-335 | - - - - - - - - - |
| 13. Spring, Relief Valve (1) | 0203-3314-325 | - - - - - - - - - |
| 14. Holder, Seat (1) | 0206-0151-525 | - - - - - - - - - |
| 15. Seat, Fixed (1) | 0206-0168-525 | - - - - - - - - - |
| 16. Seat, Movable (1) | 0206-0167-525 | - - - - - - - - - |
| 17. Spring, Compression (1) | 0203-3036-325 | - - - - - - - - - |
| 18. Pin, Groove (2) | 0143-3210-410 | - - - - - - - - - |
| 19. Strainer Nipple w/Filter (1) | 0206-2805-725 | 4730-00-216-1967 |
| 20. Regulator Body $O_2$ (1) | 0206-0153-235 | - - - - - - - - - |
| 21. Tee Handle, $O_2$ (White w/Green Characters) (1) | 0219-3389-600 | - - - - - - - - - |
| 22. $O_2$ Gauge, 3000 psi (1) | 0205-8350-300 | 6680-00-933-5368 |
| 23. Fitting, Quick Connect Schrader $O_2$ (1) | 0221-0525-300 | 4730-00-933-5133 |
| 24. Dial, $O_2$ (Not Shown) (1) | 0205-2215-300 | - - - - - - - - - |

**Figure 39**
$O_2$ Regulator Assembly, 0306-1480-800

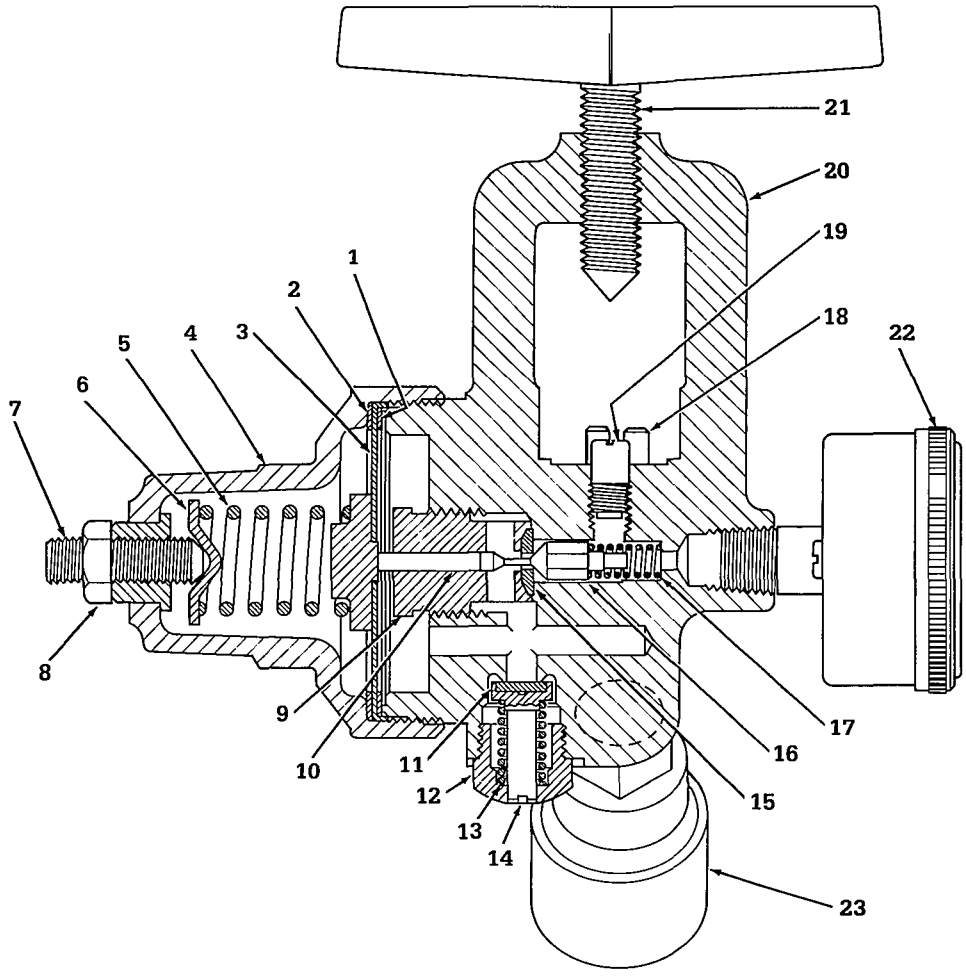


| Description and (Qty.) | Ohmeda Stock No. | National Stock No. |
|---|---|---|
| 1. Gasket (1) | 0210-5349-325 | - - - - - - - - - |
| 2. Ring, Slip (1) | 0830-2677-325 | - - - - - - - - - |
| 3. Diaphragm (1) | 0210-7233-725 | - - - - - - - - - |
| 4. Case, Spring Assembly (1) | 0830-1774-325 | - - - - - - - - - |
| 5. Spring, Regulator (1) | 0830-1691-325 | - - - - - - - - - |
| 6. Button, Spring (1) | 0830-1689-325 | - - - - - - - - - |
| 7. Screw, Set 5/16-18 (1) | 0141-4140-132 | - - - - - - - - - |
| 8. Nut, Hex 5/16-18 (1) | 0144-3340-113 | - - - - - - - - - |
| 9. Retainer (1) | 0830-3247-325 | - - - - - - - - - |
| 10. Pin, Regulator (1) | 0206-0169-525 | - - - - - - - - - |
| 11. Seat, Valve (1) | 0206-0152-325 | - - - - - - - - - |
| 12. Cap, Relief Valve (1) | 0830-0882-335 | - - - - - - - - - |
| 13. Spring, Relief Valve (1) | 0203-3314-325 | - - - - - - - - - |
| 14. Holder, Seat (1) | 0206-0151-525 | - - - - - - - - - |
| 15. Seat, Fixed (1) | 0206-0168-525 | - - - - - - - - - |
| 16. Seat, Movable (1) | 0206-0167-525 | - - - - - - - - - |
| 17. Spring, Compression (1) | 0203-3036-325 | - - - - - - - - - |
| 18. Pin, Groove (2) | 0143-3210-410 | - - - - - - - - - |
| 19. Strainer Nipple w/Filter (1) | 0206-2805-725 | 4730-00-216-1967 |
| 20. Regulator Body $N_2O$ (1) | 0206-0154-235 | - - - - - - - - - |
| 21. Tee Handle, $N_2O$ (Blue w/White Characters) (1) | 0219-3381-600 | - - - - - - - - - |
| 22. $N_2O$ Gauge, 3000 psi (1) | 0205-8351-300 | 6680-00-933-5369 |
| 23. Fitting, Quick Connect Schrader $N_2O$ (1) | 0221-0526-300 | 4730-00-933-5132 |
| 24. Dial, $N_2O$ (Not Shown) (1) | 0205-2201-300 | - - - - - - - - - |

**Figure 40**
$N_2O$ Regulator Assembly, 0306-1481-800

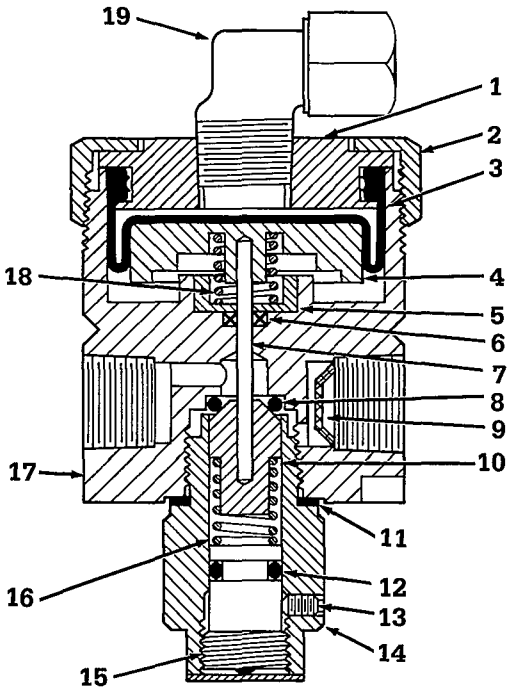


| Description and (Qty.) | Ohmeda Stock No. | National Stock No. |
|---|---|---|
| 1. Diaphragm (1) | 0207-1977-535 | - - - - - - - - - |
| 2. Cap (1) | 0402-1672-535 | - - - - - - - - - |
| 3. Diaphragm (1) | 0210-7236-300 | - - - - - - - - - |
| 4. Piston (1) | 0207-1976-500 | - - - - - - - - - |
| 5. Seat, Spring (1) | 0207-1980-500 | - - - - - - - - - |
| 6. Quad-Ring (1) | 0210-0516-300 | - - - - - - - - - |
| 7. Pin, Thrust (1) | 0401-5285-300 | - - - - - - - - - |
| 8. O-Ring (1) | 0210-0526-300 | - - - - - - - - - |
| 9. Screen, Gas Inlet (1) | 0214-7107-325 | - - - - - - - - - |
| 10. Core, Valve (1) | 0207-1972-500 | - - - - - - - - - |
| 11. Gasket (1) | 0210-5200-300 | - - - - - - - - - |
| 12. O-Ring (1) | 0210-0669-300 | - - - - - - - - - |
| 13. Screw, Set 4-40 (1) | 0141-4117-104 | - - - - - - - - - |
| 14. Guide, Valve (1) | 0207-1973-535 | - - - - - - - - - |
| 15. Screw, Tension Adj. (1) | 0207-1974-535 | - - - - - - - - - |
| 16. Spring, Compression (1) | 0203-3188-300 | - - - - - - - - - |
| 17. Body, Pressure Sensor Valve (1) | 0207-1969-535 | - - - - - - - - - |
| 18. Spring Compression (1) | 0203-3185-342 | - - - - - - - - - |
| 19. Elbow, 3/16 Tube Compression (1) | 0413-8566-355 | - - - - - - - - - |

**Figure 41**
Pressure Sensor Shutoff Valve, 0207-8277-801

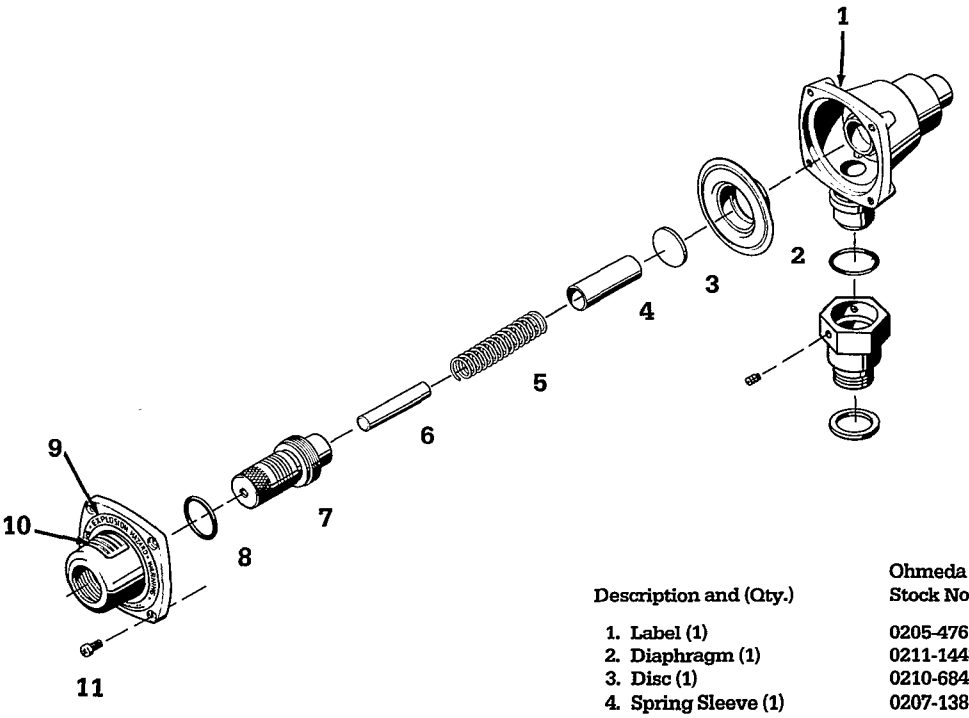


| Description and (Qty.) | Ohmeda Stock No. | National Stock No. |
|---|---|---|
| 1. Label (1) | 0205-4766-300 | - - - - - - - - - |
| 2. Diaphragm (1) | 0211-1443-300 | - - - - - - - - - |
| 3. Disc (1) | 0210-6844-500 | - - - - - - - - - |
| 4. Spring Sleeve (1) | 0207-1389-500 | - - - - - - - - - |
| 5. Spring (1) | 0203-3518-300 | - - - - - - - - - |
| 6. Pin (1) | 0401-5654-300 | - - - - - - - - - |
| 7. Knob (1) | 0207-1390-535 | - - - - - - - - - |
| 8. O-Ring (1) | 0210-0594-300 | - - - - - - - - - |
| 9. Label, Warning (1) | 0205-4349-300 | - - - - - - - - - |
| 10. Label (1) | 0205-4465-300 | - - - - - - - - - |
| 11. Screw, 8-32 (4) | 0140-6427-105 | - - - - - - - - - |

**Figure 42**
Exploded View of Adjustable Pressure Limiting Valve (APL). 0207-8199-800

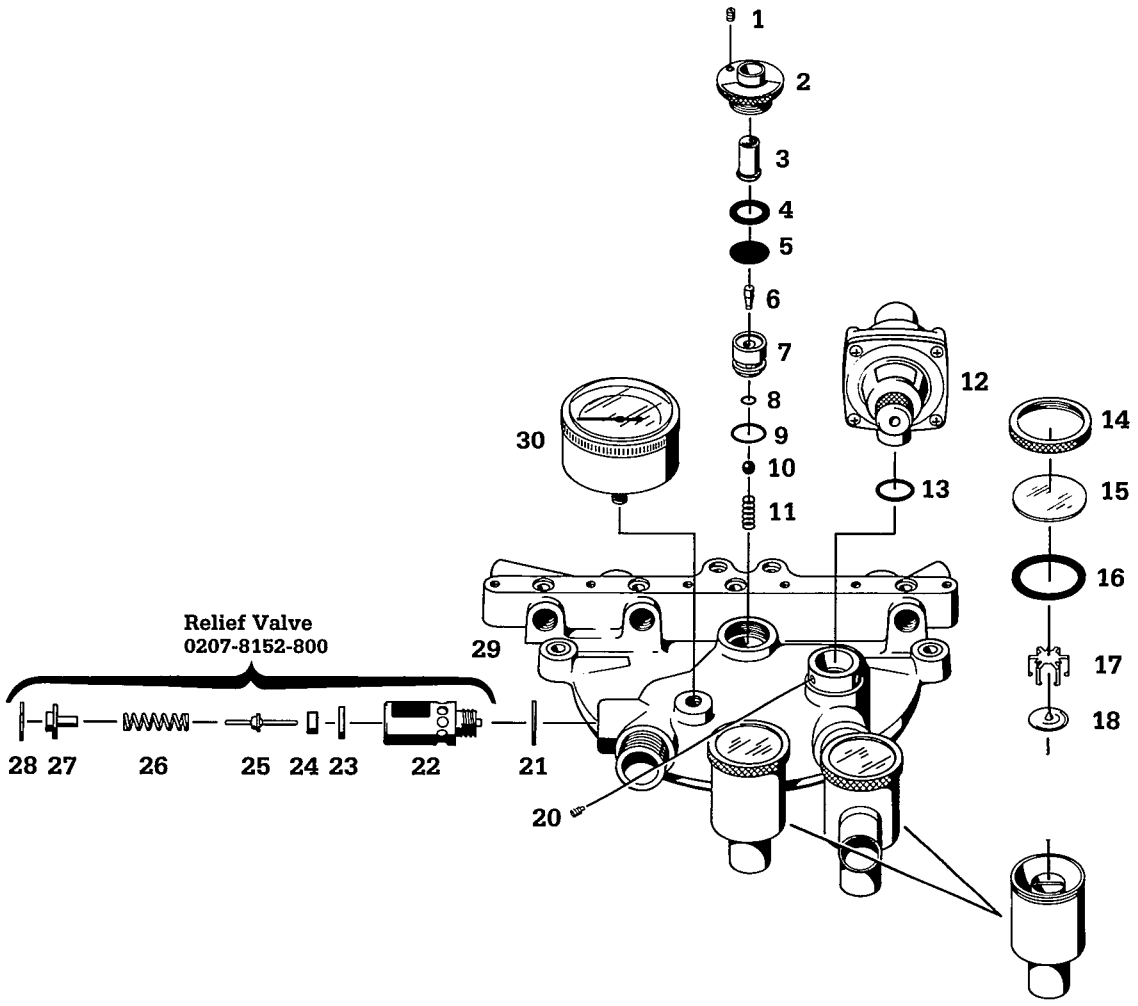


Note: Installation should be with point on the disc facing upward.

| Description and (Qty.) | Ohmeda Stock No. | National Stock No. |
|---|---|---|
| 1. Screw, Set 6-32 (1) | 0141-4124-106 | - - - - - - - - - |
| 2. Guide, Knob, Oxygen Flush Valve (1) | 0216-1338-552 | - - - - - - - - - |
| 3. Knob, Oxygen Flush Valve (1) | 0207-2178-550 | - - - - - - - - - |
| 4. Gasket, Oxygen Flush Valve (1) | 0210-5245-300 | - - - - - - - - - |
| 5. Diaphragm, Oxygen Flush Valve (1) | 0210-7203-300 | - - - - - - - - - |
| 6. Thrust Pin (1) | 0207-2179-500 | - - - - - - - - - |
| 7. Thrust Pin Guide (1) | 0207-2180-500 | - - - - - - - - - |
| 8. O-Ring (1) | 0210-0591-300 | - - - - - - - - - |
| 9. Gasket (1) | 0210-0606-300 | - - - - - - - - - |
| 10. Ball, Stainless Steel (1) | 0409-1686-300 | - - - - - - - - - |
| 11. Spring (1) | 0203-3162-300 | - - - - - - - - - |
| 12. Valve, Relief Diaphragm (1) | 0207-8199-800 | (See Figure 42) |
| 13. O-Ring (1) | 0210-0657-300 | - - - - - - - - - |
| 14. Ring, Knurled (2) | 0219-1322-535 | - - - - - - - - - |
| 15. Window, Transparent (2) | 0219-0007-300 | 9330-00-926-4573 |
| 16. Gasket (2) | 0210-0996-300 | 5330-00-926-9238 |
| 17. Cage (2) | 0219-1338-300 | 6515-00-933-5117 |
| 18. Disc Check Valve (2) | 0210-5295-100 | 6515-00-933-5116 |
| 19. Barrier Ring (1) | 0203-5309-503 | 5365-01-252-5565 |
| 20. Screw, Set 8-32 (3) | 0141-9527-106 | - - - - - - - - - |
| 21. Gasket (1) | 0210-5265-300 | 5330-00-171-4485 |
| 22. Body, Relief Valve (Non-Adjustable) (1) | 0207-1376-535 | - - - - - - - - - |
| 23. Seal, Silicone (1) | 0210-6524-300 | - - - - - - - - - |
| 24. Spacer, White Delrin (1) | 0207-1712-100 | - - - - - - - - - |
| 25. Stem, Valve SA Relief (1) | 0207-1700-700 | 6515-00-933-5152 |
| 26. Spring, Compression (1) | 0203-3336-300 | - - - - - - - - - |
| 27. Cap, Relief Valve (1) | 0207-1375-535 | - - - - - - - - - |
| 28. Truarc Retaining Ring (1) | 0203-5262-300 | - - - - - - - - - |
| 29. Control Head Body (1) | 0219-1727-742 | - - - - - - - - - |
| 30. Breathing Circuit Pressure Gauge (1) | 0205-8636-300 | - - - - - - - - - |

**Figure 43**
Control Head

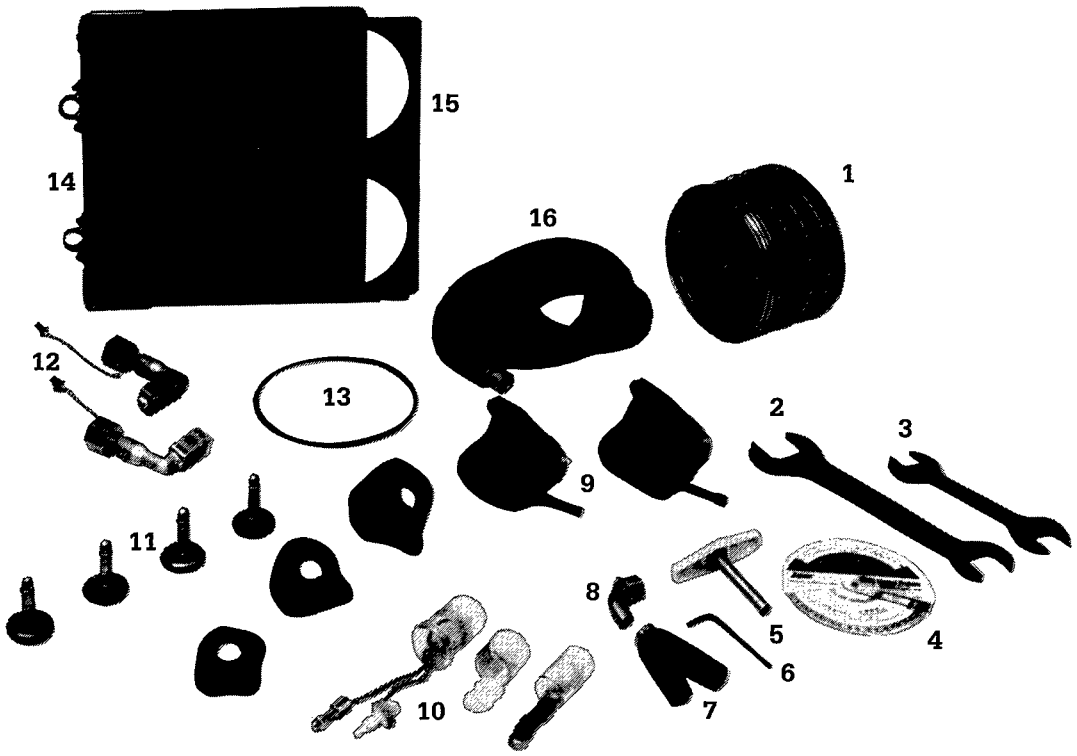


| Description and (Qty.) | Ohmeda Stock No. | National Stock No. |
|---|---|---|
| 1. Canister and Housing (2) consisting of: | 0219-1567-800 | - - - - - - - - - |
| Metal Guard | 0219-1571-300 | - - - - - - - - - |
| Grounding Clip | 0203-5120-300 | - - - - - - - - - |
| Canister | 0212-1071-200 | - - - - - - - - - |
| Gasket | 0210-1210-300 | - - - - - - - - - |
| Seal | 0210-1218-300 | - - - - - - - - - |
| Screen | 0219-1723-100 | - - - - - - - - - |
| 2. Open End Wrench, 1⅛" – 1 5/16" (1) | 0203-2131-300 | - - - - - - - - - |
| 3. Open End Wrench, ¾" – ⅞" (1) | 0203-2119-300 | - - - - - - - - - |
| 4. Flow Calculator w/ Mtg. Pad (1) | 0205-7101-810 | - - - - - - - - - |
| 5. Tee Valve Wrench (1) | 0219-3405-700 | - - - - - - - - - |
| 6. Allen Wrench 3/16 Hex (1) | 0203-2061-300 | - - - - - - - - - |
| 7. Y-Inhaler (1) | 0219-4532-100 | - - - - - - - - - |
| 8. Mask Elbow (1) | 0219-4943-100 | - - - - - - - - - |
| 9. Masks | | |
| Large Adult (1) | 0309-0388-801 | 6515-00-347-2200 |
| Medium Adult (1) | 0309-0387-801 | 6515-00-299-8297 |
| Child (1) | 0309-0628-300 | 6515-01-033-3695 |
| Infant (1) | 0309-0627-300 | 6515-01-033-3694 |
| Newborn (1) | 0309-0626-300 | 6515-01-033-3693 |
| 10. Plastic Vials | | |
| Small Vial (1) | 0205-7369-300 | - - - - - - - - - |
| Extra Check Valve Discs (2) | 0210-5295-100 | - - - - - - - - - |
| Medium Vial (1) | 0205-7372-300 | - - - - - - - - - |
| Extra Cylinder Gaskets (10) | 0205-7433-810 | - - - - - - - - - |
| Large Vial (1) | 0205-7377-300 | - - - - - - - - - |
| Extra Funnel Plug w/ Chain (1) | 0216-1925-700 | - - - - - - - - - |
| Extra Drain Plug w/ Chain (1) | 0216-1931-700 | - - - - - - - - - |

| Description and (Qty.) | Ohmeda Stock No. | National Stock No. |
|---|---|---|
| 11. Glides (4) | 0415-9015-300 | - - - - - - - - - |
| Casters (Not Shown) (4) | 0415-8120-300 | - - - - - - - - - |
| 12. Large Cylinder Adapters | | |
| $O_2$ (1) | 0204-2660-800 | - - - - - - - - - |
| $N_2O$ (1) | 0204-2660-802 | - - - - - - - - - |
| Protective Closure Devices (4) | 0216-1401-700 | - - - - - - - - - |
| 13. Gaskets, Absorber (Extra) (1) | 0210-1210-300 | - - - - - - - - - |
| 14. Instrument Tray (1) | 0215-0530-300 | 6515-01-253-8146 |
| 15. Cylinder Holder (1) | 0215-0532-300 | 6515-01-250-8934 |
| 16. Gas Evacuation Tubing, 5' lengths, 19mm (2) (Not Shown) | 0225-0808-700 | - - - - - - - - - |
| 17. Connector 19mm (1) | 0213-2957-500 | - - - - - - - - - |
| 18. Instrument Tray w/ $O_2$ Monitor Case (1) | 0215-0531-300 | - - - - - - - - - |

**Figure 44**
Items Stored in Lower Case

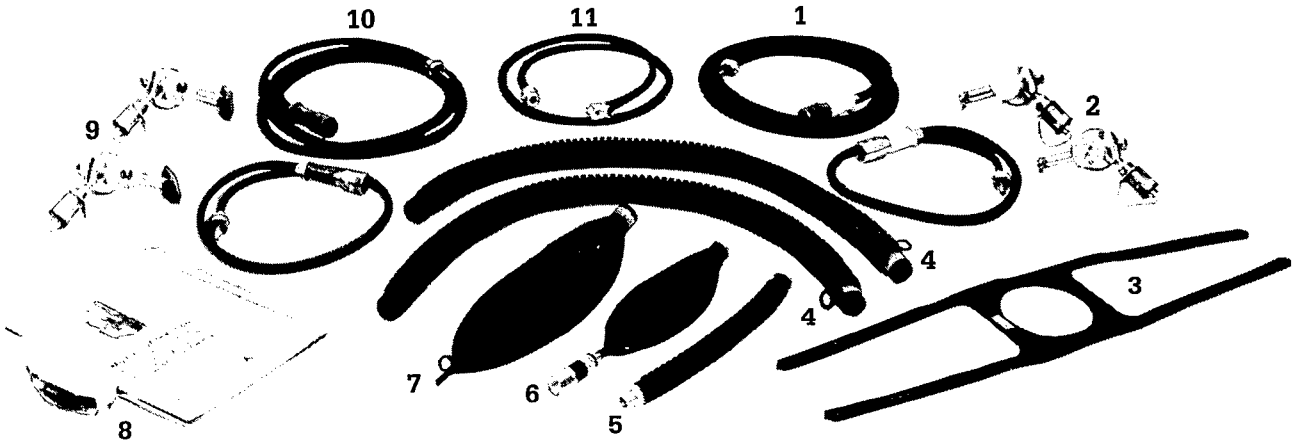


| Description and (Qty.) | Ohmeda Stock No. | National Stock No. |
|---|---|---|
| 1. Gas Supply Hose, $O_2$ | | |
| Long (114") (1) | 0211-8995-801 | 4720-00-933-5213 |
| Short (40") (1) | 0211-8995-800 | 4720-00-933-5212 |
| 2. Regulator Assemblies, $O_2$ (2) | 0306-1480-800 | 6680-01-129-5658 |
| 3. Head Strap (1) | 0211-1676-700 | 6515-00-386-9708 |
| 4. Breathing Tubes, Long, Corrugated, 32" (2) | 0211-9004-800 | 6515-00-302-1500 |
| 5. Short Breathing Tube, Corrugated, 10½" (1) | 0211-9012-800 | - - - - - - - - - |
| 6. Small Breathing Bag (1 Liter) | 0216-4608-800 | - - - - - - - - - |
| Including: | | |
| Bushing (1) | 0219-4909-538 | - - - - - - - - - |
| Scavenging Valve (1) | 0207-8114-800 | - - - - - - - - - |
| 7. Large Breathing Bag (3 Liter) (1) | 0211-2801-801 | - - - - - - - - - |
| 8. Clipboard (1) | 0216-4600-800 | - - - - - - - - - |
| 9. Regulator Assemblies, $N_2O$ (2) | 0306-1481-800 | 6680-01-130-2010 |
| 10. Gas Supply Hose, $N_2O$ | | |
| Long (114") (1) | 0211-8995-803 | 4720-00-933-5215 |
| Short (40") (1) | 0211-8995-802 | 4720-00-933-5214 |
| 11. Pediatric Supply Hose | | |
| Including: | | |
| Connector (1) | 0216-4612-550 | - - - - - - - - - |
| Adapter (1) | 0219-4912-738 | - - - - - - - - - |

**Figure 45**
Items Stored in Upper Case

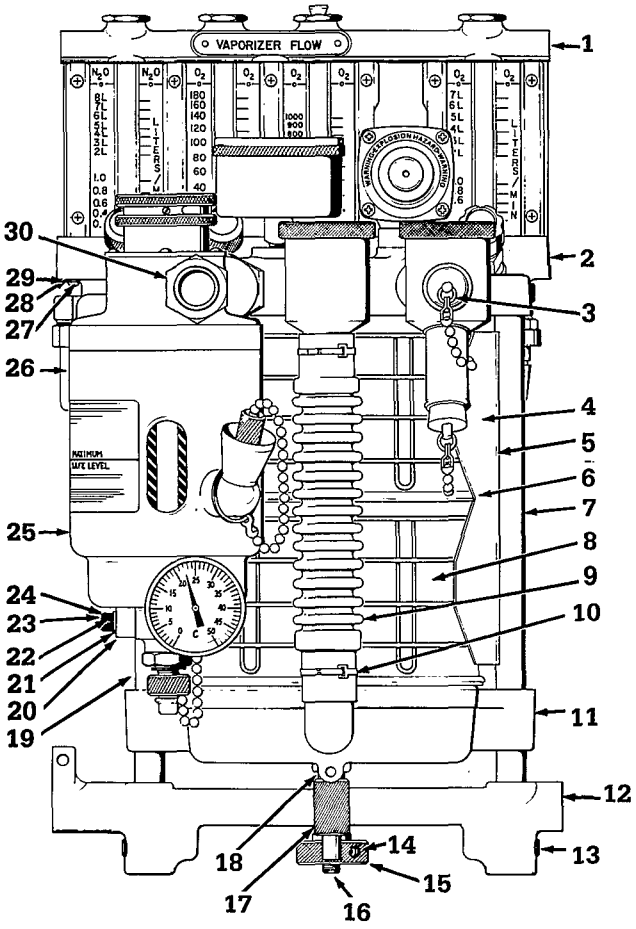


| Description and (Qty.) | Ohmeda Stock No. | National Stock No. |
|---|---|---|
| 1. Head Assembly (1) | 0216-6058-801 | - - - - - - - - - |
| 2. Screw ¼-20 (2) | 0144-2136-216 | - - - - - - - - - |
| 3. Plug and Chain Assembly (1) | 0216-4604-800 | - - - - - - - - - |
| 4. Retainer (2) | 0214-1175-435 | - - - - - - - - - |
| 5. Screw 10-32 (6) | 0140-5131-103 | - - - - - - - - - |
| 6. Wash/Lok (6) | 0202-3438-340 | - - - - - - - - - |
| 7. Rod Guide (1) | 0216-1340-552 | - - - - - - - - - |
| 8. Canister (2) | 0219-1567-800 | - - - - - - - - - |
| 9. Tube Corrugated (1) | 0211-0892-700 | - - - - - - - - - |
| 10. Clamp Tube (2) | 0218-1546-600 | 1660-00-945-5527 |
| 11. Base Absorber (1) | 0219-1701-743 | - - - - - - - - - |
| 12. Bracket Mounting (1) | 0216-1333-249 | - - - - - - - - - |
| 13. Screw ¼-20 (2) | 0144-2136-216 | - - - - - - - - - |
| 14. Screw ¼-20 (1) | 0141-4136-116 | - - - - - - - - - |
| 15. Knob (1) | 0216-4844-550 | - - - - - - - - - |
| 16. Screw Absorber Clamp (1) | 0400-3149-500 | - - - - - - - - - |
| 17. Body Drain Valve (1) | 0216-4892-700 | - - - - - - - - - |
| 18. Nipple Drain Valve (1) | 0216-4895-535 | - - - - - - - - - |
| 19. Rod Guide (1) | 0216-1340-552 | - - - - - - - - - |
| 20. Tie Bar (1) | 0216-3186-550 | - - - - - - - - - |
| 21. Wash/Lok (2) | 0202-3415-340 | - - - - - - - - - |
| 22. Screw ¼-20 (2) | 0144-2136-212 | - - - - - - - - - |
| 23. Wash/Lok (1) | 0202-3438-340 | - - - - - - - - - |
| 24. Screw 10-32 (1) | 0144-2131-214 | - - - - - - - - - |
| 25. Vaporizer (1) | 0309-2002-800 | - - - - - - - - - |
| 26. Tube (1) | 0213-1308-535 | - - - - - - - - - |
| 27. Screw 8-32 (2) | 140-6127-105 | - - - - - - - - - |
| 28. Wash/Lok (2) | 0202-3434-300 | - - - - - - - - - |
| 29. Retainer (1) | 0214-1178-300 | - - - - - - - - - |
| 30. Adapter 1⅛ (1) | 0219-0108-535 | - - - - - - - - - |

## Items Not Illustrated

| Description and (Qty.) | Ohmeda Stock No. | National Stock No. |
|---|---|---|
| 1. Plug and Chain Assembly (1) | 0216-4604-800 | - - - - - - - - - |
| Consisting Of: | | |
| Coupling Bead Chain (6) | 0203-0100-300 | - - - - - - - - - |
| Ring, Split (3) | 0203-0103-300 | - - - - - - - - - |
| Rubber Stopper (2) | 0211-2229-300 | - - - - - - - - - |
| Stopper Retainer (2) | 0401-0415-500 | - - - - - - - - - |
| 2. Control Head Assembly Consisting of (In Addition to Parts Listed): | | |
| Absorber Canisters Rods (2) | 0216-1340-552 | - - - - - - - - - |
| Tube, Short Corrugated Absorber (1) | 0211-0892-700 | - - - - - - - - - |
| Tube, Top Manifold to Vaporizer (1) | 0213-1308-535 | - - - - - - - - - |
| Bracket, Tube Retaining (1) | 0214-1178-300 | - - - - - - - - - |
| Bar Vaporizer Support (1) | 0216-1386-550 | - - - - - - - - - |
| Clamp for Short Absorber Corrugated Tube (2) | 0218-1546-600 | 1660-00-945-5527 |
| Adapter, Vaporizer Outlet (1) | 0219-0108-535 | - - - - - - - - - |
| Label, $O_2$ Flow Control Knob (1) | 0205-2216-300 | - - - - - - - - - |
| Label, $N_2O$, Flow Control Knob (1) | 0205-2201-300 | - - - - - - - - - |
| Label, $O_2$ for Vaporizer Flow Control Knob (1) | 0205-2213-300 | - - - - - - - - - |
| Label, $O_2$ Flush Valve (1) | 0205-4043-300 | - - - - - - - - - |
| Label, Vaporizer Flow (1) | 0205-4452-300 | - - - - - - - - - |
| Label, Serial Number (1) | 0205-4453-300 | - - - - - - - - - |
| Label, Non-Adjustable Relief Valve (1) | 0205-4454-300 | - - - - - - - - - |
| Gasket, Flowtube Bottom Seal (4) | 0210-0295-300 | 5310-00-926-9237 |
| Tube, $O_2$ Supply to Pressure Sensor Shutoff Valve (1) | 0213-1014-535 | - - - - - - - - - |
| Pin, Throttling, $O_2$ for Vaporizer (1) | 0219-1729-500 | - - - - - - - - - |
| Control Head Inlet, $O_2$ (1) | 0221-0658-735 | - - - - - - - - - |
| Control Head Inlet, $N_2O$ (1) | 0221-0659-735 | - - - - - - - - - |
| Clamp Screw, Absorber (1) | 0400-3149-500 | - - - - - - - - - |
| Clamp Screw Knob (1) | 0216-4844-550 | - - - - - - - - - |
| Set Screw for Clamp Screw Knob (1) | 0141-4136-116 | - - - - - - - - - |
| Drain Valve, Absorber Consisting of Nipple (1) | 0216-4895-535 | - - - - - - - - - |
| Drain Valve Body (1) | 0216-4892-700 | - - - - - - - - - |
| Loctite 242 (AR*) | 0220-5016-300 | - - - - - - - - - |
| Lubricant, Vac Kote (1 oz.) (AR*) | 0220-0091-300 | - - - - - - - - - |
| Tape, Teflon 3/16" W (AR*) | 0220-5060-300 | - - - - - - - - - |
| Tape, ½ W (AR*) | 0220-5106-300 | - - - - - - - - - |
| Nipple, Pressure Sensor Shutoff Valve Mtg. (1) | 0213-5025-335 | - - - - - - - - - |
| Plug (2) | 0413-3510-335 | - - - - - - - - - |
| Connector, 3/16 Tube Compression (1) | 0413-8590-335 | - - - - - - - - - |
| Connector, ¼ Tube Compression (1) | 0413-8591-335 | - - - - - - - - - |
| 3. Protective Closure Device, Kit (1) | 0216-6745-810 | - - - - - - - - - |
| PCD for Regulator Assembly (4) | 0216-1401-700 | - - - - - - - - - |
| PCD for Control Head Inlets (2) | 0216-1402-700 | - - - - - - - - - |
| PCD for Vaporizer Port (1) | 0216-1403-700 | - - - - - - - - - |
| PCD for Large Cylinder Adapters (2) | 0216-1404-700 | - - - - - - - - - |
| 4. Level (1) | 0216-1406-300 | - - - - - - - - - |

* Specify Amount Required.

**Figure 46**
Head Assembly, 0216-6057-801

# Warranty

Ohmeda warrants that this product when purchased new from Ohmeda or an Ohmeda Authorized Dealer shall, for twelve(12) months from date of delivery, be free of functional defects in materials and workmanship and will conform with the description given in this manual and accompanying labels and inserts. The warranty applies only when the product has been used normally, has been maintained and serviced periodically, and has been repaired according to instructions provided by Ohmeda. Expendable parts are warranted for thirty (30) days only. The warranty does not apply if the product has been repaired or altered by persons not authorized by Ohmeda or without written instructions provided by Ohmeda. Neither does the warranty apply if the product has been subject to abuse, misuse, negligence or accident.

Ohmeda agrees to repair or replace the product free of charge providing:

1. The problem has been reported to an Ohmeda Service Office within seven days of the warranty expiration date.
2. The product has been inspected by Ohmeda Service Personnel or has been shipped prepaid to an Ohmeda Service Office for inspection.
3. Ohmeda determines that the product does not conform with the warranty.

Ohmeda *is not liable for incidental, consequential or special damages.*

*There are no express or implied warranties beyond this warranty.* Ohmeda *does not warrant the product or its parts for any other than the use stated in this manual.*

Ohmeda
A Division of The BOC Group Inc
Madison Wisconsin 53707
BOC Health Care