HAEMONETICS®

6515-01-240-6883

Cell Saver® 4
Service Manual

HAEMONETICS®

Cell Saver® 4
Service Manual

Revision B

This manual references Cell Saver® 4 Systems with serial number 840 and higher.

NSN 6515-01-240-6883
Blood Recovery Delivery System Automated.

©1987 Haemonetics® Corporation
All Rights Reserved
Printed in U.S.A.
First printing September 1987
Rev A printing March 1988
Rev B printing May 1988

Haemonetics Corporation
400 Wood Road
Braintree, Massachusetts 02184
(617) 848-7100

Part No. 17893, Rev B

SCOPE

This manual is intended for qualified technicians who seek detailed information on the operation, troubleshooting, and repair of the Haemonetics® Cell Saver® 4 Autologous Blood Recovery System. Operators and others who require operating instructions and basic maintenance information should refer to the *Cell Saver 4 Owner's Operating and Maintenance Manual.*

This service manual consists of the following:

- *Chapter 1, Introduction* . Explains the purpose, applications, features, and specifications of the Cell Saver 4.

- *Chapter 2, Principles of Operation.* Provides detailed information relative to the internal operation of the system, includes flowcharts and detailed mechanical and electrical descriptions.

- *Chapter 3, Troubleshooting.* Outlines procedures for troubleshooting and testing, explains diagnostic messages, and recommends appropriate Service Procedures.

- *Chapter 4, Software Diagnostics.* Explains the operation of the software including error messages, self-checks, and software diagnostics.

- *Chapter 5, System Checkout.* Provides a procedure to check the performance of the Cell Saver 4.

- *Chapter 6, Disassembly.* Explains how to remove components from the system. Components are identified through the use of exploded views and photographs.

- *Chapter 7 Replacement Parts List and Ordering Information.* Identifies components by part number and alphabetically, provides part ordering information.

- *Chapter 8, Reference Diagrams.* Contains diagrams of circuits that are referenced throughout procedures described in other chapters.

Proprietary Material
Information and descriptions contained herein are the property of Haemonetics® Corporation. Such information and descriptions may not be copied or reproduced by any means, or disseminated or distributed without the express prior written permission of Haemonetics® Corporation, 400 Wood Road, Braintree, Massachusetts 02184, (617) 848-7100

Exempt from this restriction is the United States Government which is granted permission to reproduce the information contained in this manual with the limitation that such information may not be released outside of the Government, in accordance with Armed Forces Procurement Regulation, Section IX, Paragraph 9–203.

Warnings, Cautions, and Notes

The terms warning, caution, and note have specific meanings in this manual.

- A ***Warning*** advises against actions or situations that could result in personal injury or even death. A ***Warning*** should be given especially careful attention.

- A ***Caution*** advises against actions or situations that could damage equipment, although personal injury is unlikely.

- A ***Note*** provides useful information regarding a procedure or a function of the Cell Saver 4.

Table of Contents

Paragraph *Page*

INTRODUCTION

1.1 GENERAL 1-1
1.2 SYSTEM DESCRIPTION 1-3
1.2.1 Hardware 1-3
1.2.2 Disposables 1-8
1.2.2.1 How the bowl works 1-11
1.3 SPECIFICATIONS 1-11
1.3.1 Dimensions and weight 1-11
1.3.2 Clearances required 1-11
1.3.3 Maneuverability and portability 1-11
1.3.4 Primary power requirements 1-11

Paragraph Page

PRINCIPLES OF OPERATION

2.1 GENERAL 2-5
2.2 SAFETY PRECAUTIONS 2-5
2.2.1 Flammable locations 2-5
2.2.2 Electrical shock hazards; leakage current requirements 2-5
2.2.3 Rotating machinery 2-6
2.2.4 Communicable disease 2-6
2.2.5 Bowl misalignment 2-6
2.2.6 Restrictions to flow 2-6
2.2.7 Twists kinks and flat spots in tubing 2-7
2.2.8 Overheating 2-7
2.3 CONTROLS AND INDICATORS 2-8
2.3.1 Display 2-8
2.3.2 Control and indicators 2-8
2.4 SYSTEM BLOCK DIAGRAM 2-12
2.5 PRINTED CIRCUIT BOARDS 2-12
2.5.1 Motherboard 2-12
2.5.2 CPU printed circuit board 2-13
2.5.2.1 Microprocessor 2-13
2.5.2.2 Program memory 2-14
2.5.2.3 Timers 2-19
2.5.2.4 Interrupt control 2-20
2.5.2.5 Interrupt sequence 2-23
2.5.2.6 Input/output 2-23
2.5.2.7 Keyboard scanner 2-25
2.5.2.8 Expansion bus buffers 2-26
2.5.2.9 Status indicators 2-26

Table of Contents

Paragraph *Page*

PRINCIPLES OF OPERATION

2.5.3 Expansion printed circuit board 2-27
2.5.3.1 Program memory 2-27
2.5.3.2 Data memory 2-29
2.5.3.3 I/O device 8156 2-30
2.5.3.4 Serial communications controller 8251A 2-30
2.5.3.5 A-to-D converter, 13-bit 2-30
2.5.3.6 Bridge input amplifiers 2-32
2.5.4 Input/Output printed circuit board 2-32
2.5.4.1 Output latches 2-32
2.5.4.2 Pump motor digital-to-analog (D/A) convertors 2-35
2.5.4.3 A/D convertor with multiplexer 2-35
2.5.4.4 Sound generator 2-36
2.5.4.5 Device decoding logic 2-38
2.5.4.6 Signal transfer 2-39
2.5.4.7 Bowl optics 2-39
2.5.4.8 Centrifuge motor control 2-50
2.5.5 Driver printed circuit board 2-59
2.5.5.1 System interconnections 2-59
2.5.5.2 Signal transfers 2-59
2.5.5.3 Signal buffers 2-59
2.5.5.4 Output drivers 2-60
2.5.5.5 Valve drivers 2-60
2.5.5.6 Pump control 2-63
2.5.5.7 Pump speed request input 2-63
2.5.5.8 Pump tachometer feedback 2-63
2.5.5.9 Error amplifier 2-66
2.5.5.10 PWM pump control 2-66
2.5.5.11 Drive circuit 2-67
2.5.5.12 Current limiting 2-68
2.5.5.13 Pump disable 2-68
2.5.5.14 Reversing relay 2-68
2.5.6 Centrifuge motor control printed circuit board 2-69
2.5.6.1 Speed sensors 2-69
2.5.6.2 Power control 2-69
2.5.6.3 Overspeed protection 2-70
2.5.6.4 Zero crossing detector 2-70
2.5.6.5 Braking 2-70
2.5.6.6 Indicators 2-70
2.6 PNEUMATIC PINCH VALVE 2-71
2.6.1 General description 2-71
2.6.2 Operation 2-71
2.6.3 Specifications 2-71

Paragraph *Page*

PRINCIPLES OF OPERATION

2.6.4 Pneumatic pinch valve tubing manifold 2-71
2.7 CENTRIFUGE COVER LATCH 2-71
2.7.1 Locking mechanism 2-72
2.8 CENTRIFUGE ASSEMBLY 2-74
2.9 PUMP MOTOR GENERATOR ASSEMBLY 2-75
2.10 AIR DETECTOR 2-75
2.11 POWER SYSTEM 2-75
2.11.1 Transformer 2-76
2.11.2 Power supply interface board 2-76
2.11.3 Switching power supply 2-76

TROUBLESHOOTING

3.1 GENERAL 3-1
3.2 TROUBLESHOOTING 3-3
3.2.1 Raising deck for access 3-3
3.2.1.1 Inoperative machine 3-5
3.2.1.2 Display 3-10
3.2.1.3 Control panel 3-14
3.2.1.4 Weigher 3-16
3.2.1.5 Alarm beeper 3-17
3.2.1.6 Air detector 3-18
3.2.1.7 Valves 3-20
3.2.1.8 Cover latch 3-22
3.2.1.9 Roller pump 3-27
3.2.1.10 Centrifuge 3-33
3.2.2 Diagnostic LED indications 3-41
3.2.3 Diagnostic display messages 3-43

SOFTWARE DIAGNOSTICS

4.1 SHUTDOWN AND NON-SHUTDOWN ERRORS, AND FAULT CONDITIONS 4-2
4.2 CS 4 TEST FUNCTIONS 4-2
4.2.1 Power-up system tests 4-2
4.2.2 Operating tests 4-3
4.2.3 Fault conditions 4-3
4.2.3.1 Fault condition messages and error codes 4-3
4.3 DIAGNOSTIC FUNCTIONS 4-4
4.4 POWER-UP SYSTEM TESTS 4-8
4.4.1 Power-on sequence 4-8
4.4.1.1 NVRAM battery test 4-8
4.4.1.2 NVRAM memory contents test 4-9

Table of Contents

Paragraph *Page*

SOFTWARE DIAGNOSTICS

4.4.1.3 ROM checksum test 4-9
4.4.1.4 RAM function test 4-9
4.4.1.5 Air detect function test 4-9
4.5 OPERATING TESTS 4-10
4.5.1 Centrifuge-related tests 4-10
4.5.1.1 Reset-7 error 4-12
4.5.1.2 Cover latch failure 4-12
4.5.1.3 System and control errors 4-12
4.6 FAULT CONDITIONS WHICH INTERRUPT PROCESSING 4-13
4.6.1 Pump not turning 4-13
4.6.2 Optics low voltage 4-13
4.6.3 Waste bag full 4-14
4.6.4 Air detects 4-15
4.6.5 Centrifuge cover open 4-16
4.6.6 Long Empty/Return cycle 4-17
4.7 DIAGNOSTIC FUNCTIONS 4-18
4.7.1 Overview 4-18
4.7.2 RAM test 4-18
4.7.3 ROM checksum test 4-18
4.7.4 Error history 4-19
4.7.5 Special diagnostic functions 4-19
4.7.6 Optics and weight display 4-19
4.7.7 ROM checksum storage 4-19
4.7.8 NVRAM re-initialization 4-20
4.7.9 Membrane keyswitch test 4-21
4.7.10 Pump volume per pump revolution record 4-21

SYSTEM CHECKOUT

General system operation ..... 5-2 through 5-11
Unit current draw test 5-12
Hypot test 5-12
Electrical stress test 5-12
Centrifuge acceleration test 5-13
Bowl vibration test 5-13
Centrifuge cover interlock test 5-13
Centrifuge overspeed function test 5-14
Pump occlusion test 5-15
Programmed pump discharge rate test 5-15
Pump speed adjustment test 5-16
Pump discharge rate/volume accounting test 5-16

Paragraph *Page*

SYSTEM CHECKOUT
Pump cover interlock test 5-18
Pump valve occlusion test 5-19
Bag weigher test 5-19
Air sensor test 5-20
Optics aiming test 5-20
Optics gain test 5-20
Diagnostic mode check 5-21

DISASSEMBLY
6.1 DISASSEMBLY 6-2
6.1.1 IV pole 6-2
6.1.2 Centrifuge cover 6-2
6.1.3 Feed tube support arms 6-3
6.1.4 Control panel 6-5
6.1.5 Gas cylinder 6-6
6.1.6 Deck cover 6-6
6.1.7 Deck 6-6
6.1.8 Valves 6-7
6.1.9 Pump head assembly 6-7
6.1.10 Pump motor assembly 6-10
6.1.11 Motor generator 6-10
6.1.12 Optical switch 6-10
6.1.13 Pump cover switch assembly 6-11
6.1.14 Air detector 6-11
6.1.15 Centrifuge 6-11
6.1.16 Choke assembly 6-11
6.1.17 Motor plate assembly 6-14
6.1.18 Hall effect sensor assembly 6-14
6.1.19 Cover latch assembly 6-14
6.1.20 Centrifuge motor brushes 6-15
6.1.21 Cover latch air assembly 6-15
6.1.22 Optics assembly 6-16
6.1.23 Motor control pcb 6-16
6.1.24 Speaker assembly 6-16
6.1.25 O-ring removal and installation 6-17
6.1.26 Card cage printed circuit boards 6-17
6.1.27 Card cage 6-18
6.1.28 Transformer 6-19
6.1.29 Power supply interface pcb 6-21
6.1.30 Weigher 6-21
6.1.31 Power supply 6-21
6.1.32 Power switch 6-22

Table of Contents

Paragraph *Page*

6.1.33 Fans 6-22
6.1.34 Air volume assembly 6-22
6.1.35 Compressor 6-22
6.1.36 Casters 6-22
6.1.37 Rear wheels 6-23

REPLACEMENT PARTS LIST AND ORDERING INFORMATION

7.1 ORDERING INFORMATION 7-1
7.1 1 Alphabetical order 7-1
7.1.2 Numerical order 7-4

SCHEMATICS AND ASSEMBLY DRAWINGS

14244 CS4 System Schematic 8-2
14246 CS4 Pneumatic Schematic 8-3
13074 CPU PCB Schematic 8-4, 8-5
13072 CPU PCB Assembly 8-6
13072 CPU PCB BOM ..... 8-7 thru 8-9
13101 I/O PCB Schematic ..... 8-10 thru 8-12
13099 I/O PCB Assembly 8-13
13099 I/O PCB BOM ..... 8-14 thru 8-17
14565 Expansion PCB Schematic (four pages) ..... 8-18 thru 8-21
14564 Expansion PCB Assembly 8-22
14564 Expansion PCB BOM ..... 8-23 thru 8-26
16952 Driver PCB Schematic ..... 8-27 thru 8-29
16951-04 Driver PCB Assembly 8-30, 8-31
16951-04 Driver PCB BOM ..... 8-32 thru 8-35
13185 Centrifuge Motor Control PCB Schematic 8-36
13183 Centrifuge Motor Control PCB Assembly 8-37
13183 Centrifuge Motor Control PCB BOM ..... 8-38 thru 8-40
14116-02 Power Supply Interface Schematic 8-41
14116-02 Power Supply Interface Assembly 8-42
14115-02 Power Supply Interface BOM 8-43
13583 Motherboard PCB Schematic 8-44
13582 Motherboard PCB Assembly 8-45
13582 Motherboard PCB BOM 8-46
14277 Membrane Switch 8-47, 8-48
14253 Transformer 8-49
14430 Power Supply ..... 8-50 thru 8-52

Figures

Figure *Page*

INTRODUCTION

1-1 The Haemonetics® Cell Saver® 4 Autologous Blood Recovery System 1-2
1-2 Cell Saver 4, front view 1-4
1-3 Cell Saver 4, rear view 1-5
1-4 Cell Saver 4, cover closed 1-6
1-5 Cell Saver 4 deck 1-7
1-6 Basic high speed disposable set (list no. 243) 1-9
1-7 How the bowl works 1-10

PRINCIPLES OF OPERATION

2-1 Typical display message 2-8
2-2 System controls 2-8
2-3 System block diagram 2-11
2-4 CS4 printed circuit boards in card cage 2-12
2-5 Motherboard pcb connectors 2-13
2-6 Central processing unit (CPU) board 2-14
2-7 CPU pcb functional block diagram 2-15
2-8 8085 AH (Z1) clock waveforms 2-16
2-9 8282 (Z3) latch 2-17
2-10 8085 (Z1) reset fucntion 2-17
2-11 8156 (Z7) block diagram 2-20
2-12 8253 (Z9) block diagram 2-20
2-13 8156 (Z7) clock pulse 2-21
2-14 8259 (Z8) block diagram 2-22
2-15 Interrupt (Z8) timing 2-24
2-16 8279 (Z10) block diagram 2-25
2-17 8279 (Z10) keyboard scan timing 2-26
2-18 Expansion board 2-27
2-19 Expansion board block diagram 2-28
2-20 Input/Output (I/O) board 2-33
2-21 I/O block diagram 2-34
2-22 AD 7524 DAC (Z4) 2-35
2-23 D/A conversion table 2-36
2-24 A-to-D block diagram 2-37
2-25 76489 (Z11) programmable sound generator block diagram 2-38
2-26 76489 (Z11) data transfer timing 2-39
2-27 Cover switch flowchart 2-40
2-28 Pump counter flowchart 2-40
2-29 Air detector flowchart 2-41
2-30 Air detector timing 2-42
2-31 Bowl opticcs block diagram 2-42

Figures (Cont)

Figure *Page*

2-32 Bowl transmission characteristics 2-43
2-33 Bowl optics block diagram 2-44
2-34 Bowl optics waveforms 2-44
2-35 Optics frequency standard and logic timing 2-47
2-36 Centrifuge motor control block diagram 2-51
2-37 Timing diagram SCR firing run mode 2-52
2-38 Timing diagram brake mode 2-52
2-39 Zero crossing circuit block diagram 2-54
2-40 Centrifuge assembly, cutaway view 2-55
2-41 Driver board 2-60
2-42 Driver pcb block diagram, part A 2-61
2-43 Driver pcb block diagram, part B 2-62
2-44 Side view of pneumatic valves 2-64
2-45 Block diagram, pump control 2-65
2-46 Pneumatic valve tubing manifold 2-72
2-47 Centrifuge cover latch 2-73
2-48 Ultrasonic transmission 2-77
2-49 Air detector assembly 2-77
2-50 Power system block diagram 2-78

TROUBLESHOOTING

3-1 Printed circuit board orientation 3-2
3-2 Deck raised for testing 3-4
3-3 Display panel ready for testing 3-12
3-4 Test pins on display power connection 3-13
3-5 Waveform during acceleration 3-35
3-6 Waveform indicating that the armature is disconnected 3-35
3-7 Motor control trigger signal 3-37
3-8 Motor control enable 3-37
3-9 Zero crossing signal 3-38

SOFTWARE DIAGNOSTICS

4-1 Location of fault condition message on display panel 4-4

DISASSEMBLY

6-1 Cell Saver 4 external components 6-3
6-2 Handle assembly 6-4
6-3 Removing the control panel 6-5
6-4 Deck components 6-8
6-5 Internal components 6-9
6-6 Centrifuge assembly 6-12
6-7 Rear view, centrifuge assembly 6-13
6-8 Removing the printed circuit boards 6-18

Figures (Cont)

Figure *Page*

6-9 Cabinet components, view A 6-19
6-10 Cabinet components, view B 6-20

Tables

Table *Page*

PRINCIPLES OF OPERATION

2-1 Cell Saver 4 Controls 2-9
2-2 EPROM Jumpers 2-16
2-3 Processor Memory Map 2-18
2-4 Processor I/O Map 2-19
2-5 Output Latches 2-32
2-6 Port 2 8749 2-56

TROUBLESHOOTING

3-1 I/O printed circuit board status LEDs 3-42
3-2 CPU printed circuit board status LEDs 3-42
3-3 Motor control printed circuit board status LEDs 3-42
3-4 Driver printed circuit board status LEDs 3-43

SOFTWARE DIAGNOSTICS

4-1 Fault condition messages 4-4
4-2 Error codes 4-7

SYSTEM CHECKOUT

5-1 Pump speed calibration 5-17
5-2 Volume accounting values 5-18
5-3 Error codes 5-22
5-4 Diagnostic key test 5-23
5-5 Programmed default settings 5-24

Chapter 1
Introduction

Contents

Paragraph		Page
1.1	GENERAL	1-1
1.2	SYSTEM DESCRIPTION	1-3
1.2.1	Hardware	1-3
1.2.2	Disposables	1-8
1.2.2.1	How the bowl works	1-11
1.3	SPECIFICATIONS	1-11
1.3.1	Dimensions and weight	1-11
1.3.2	Clearances required	1-11
1.3.3	Maneuverability and portability	1-11
1.3.4	Primary power requirements	1-11

Figure		Page
1-1	The Haemonetics® Cell Saver® 4 Autologous Blood Recovery System	1-2
1-2	Cell Saver 4, front view	1-4
1-3	Cell Saver 4, rear view	1-5
1-4	Cell Saver 4, cover closed	1-6
1-5	Cell Saver 4 deck	1-7
1-6	Basic high speed disposable set (list no. 243)	1-9
1-7	How the bowl works	1-10

1.1 GENERAL

The Haemonetics® Cell Saver® 4 Autologous Blood Recovery System, shown in Figure 1-1, is a high speed red cell salvaging system. Blood lost during surgery or as the result of trauma may be collected, processed, and returned to the patient. This conservation of blood provides the patient with the ideal replacement for lost cells and reduces the demand on the blood bank.

Haemonetics introduced the first Cell Saver in 1973, and has continually refined the product over the years. The high speed and automation of the Cell Saver 4 distinguish it from previous systems. Large-bore tubing and a high-speed pump allow the rapid processing and return of blood which has been recovered from the surgical field, while a microprocessor controls the the system through the processing cycle.

Figure 1-1, The Haemonetics® Cell Saver® 4 Autologous Blood Recovery System

The basic operating principles of the Cell Saver 4 are simple. Blood recovered from the surgical field is collected in a reservoir; when a sufficient volume (usually around 500 ml) has accumulated in the reservoir, processing in the Cell Saver may begin. Pressing the START AUTO PROCESS button opens the valve to the *collection reservoir* tubing bringing fluid into the spinning centrifuge bowl.

Once inside the spinning bowl, the heavier, denser, red cells are separated from the lighter *supernatant*. The red cells move toward the bowl walls, and as the bowl fills with red cells, the supernatant is displaced through the effluent port into the *effluent line* and finally into the *waste bag*.

An optical sensor, consisting of a transmitter and receiver mounted on the rim of the centrifuge well, monitors a spot on the bowl core. The voltage of the signal reflected from white core of the bowl changes first when the plasma meniscus passes in front of the lens and then again when the red cells rise to that level.

The microprocessor, which monitors the signal from the optical sensor, determines the correct moment to stop filling the bowl, when to start washing the packed red cells, and when to empty the cells into the reinfusion bag.

Manual controls on the lower half of the front panel allow the operator to override the automatic processing at any time.

1.2.1 Hardware (See Figures 1-2, 1-3, 1-4, 1-5.)

The external hardware of the Cell Saver® 4 consists of a membrane control panel with a display window, three pneumatic pinch valves, a centrifuge well containing an optical sensor and centrifuge chuck, 4-roller occlusive pump, air detector, and waste bag weigher.

The major internal hardware consists of a power supply, air compressor, a pneumatic valve system, centrifuge motor, pump motor, air detector, isolation transformer, and a card cage. The card cage which contains four printed circuit boards (pcbs) is bolted onto the motherboard. The pcbs contained in this card cage are as follows:

Printed circuit board	Part no.
Motherboard (MB)	13582-00
Processor (CPU) board	13072-00
Expansion (EXP) board	14564-00
Input/Output (I/O) board	13099-00
Driver (DRV) board	16951-04

Other printed circuit boards are located outside the card cage. They include the following:

Printed circuit board	Part no.
Centrifuge Motor Control board	13183-00
Power Supply Interface board	14115-02

Two dc motors inside the Cell Saver 4 chassis drive the centrifuge and the blood pump.

The Cell Saver 4 is mounted in a cabinet with casters for easy portability. Power can be provided from any standard hospital-type, grounded electrical outlet.

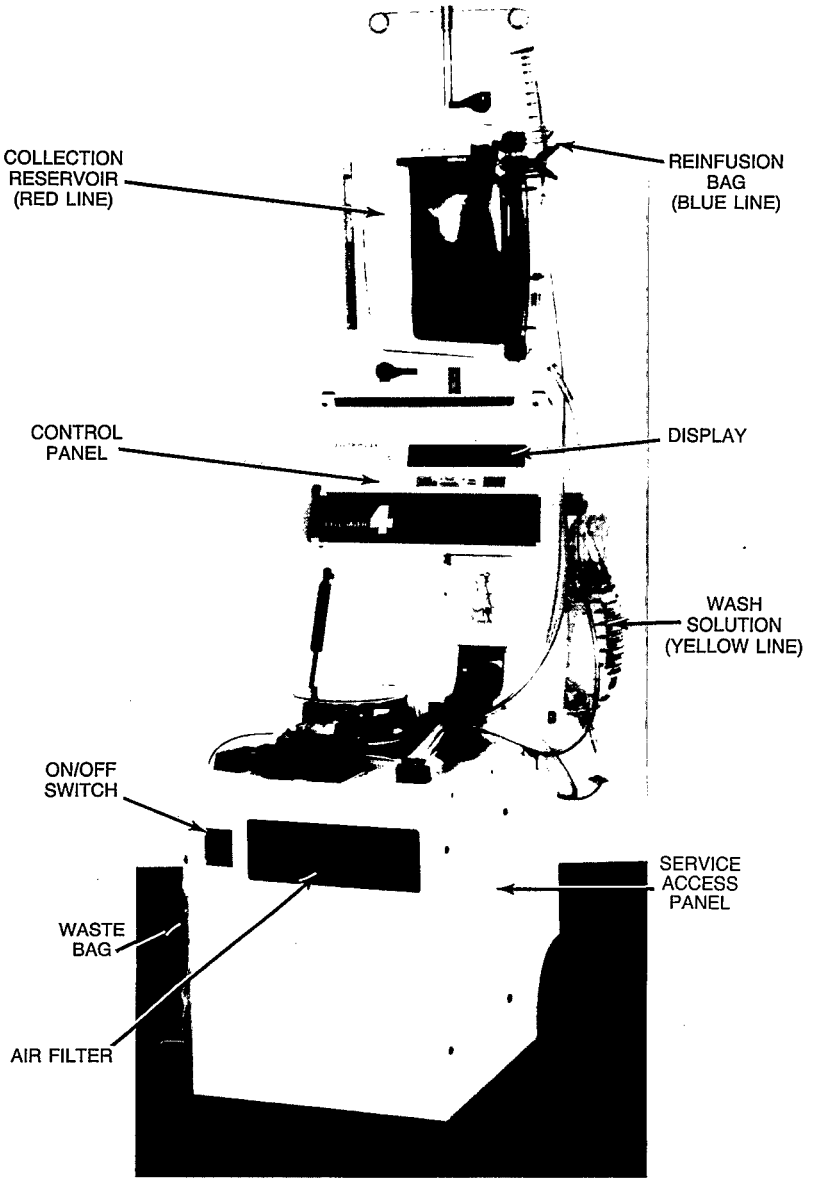

Figure 1-2, Cell Saver 4, front view

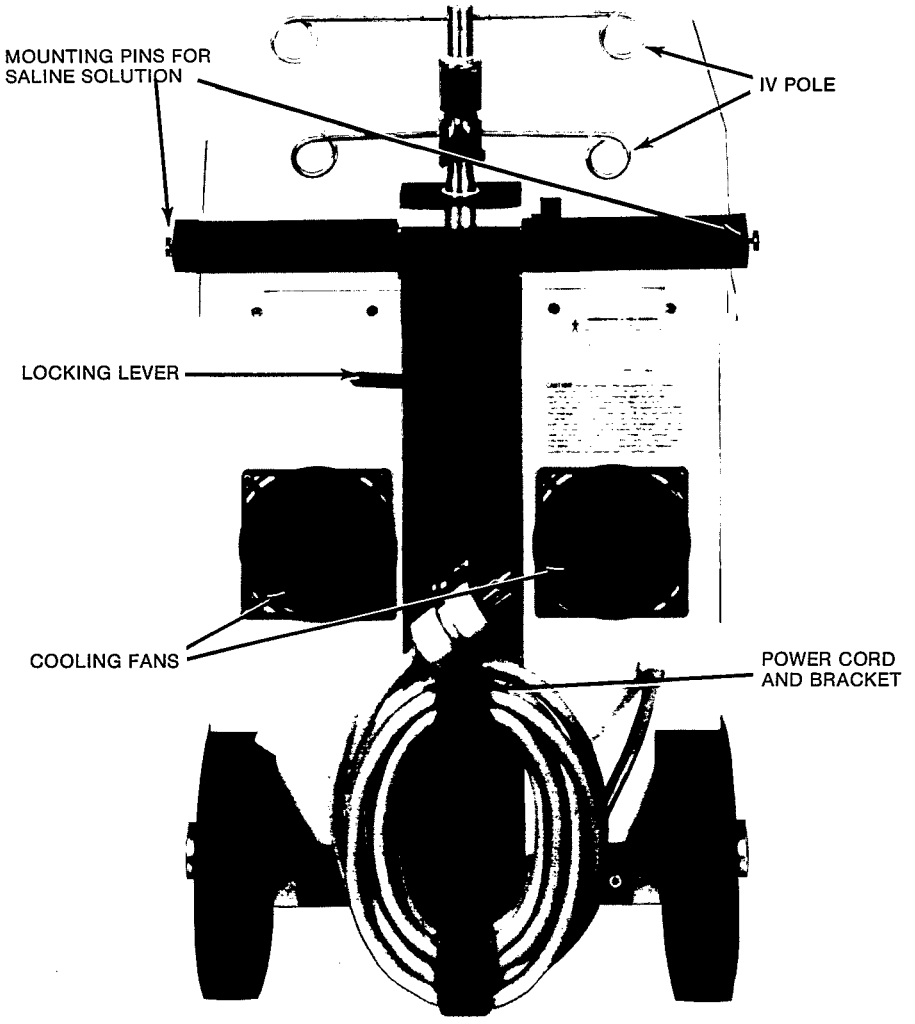

Figure 1-3, Cell Saver 4, rear view

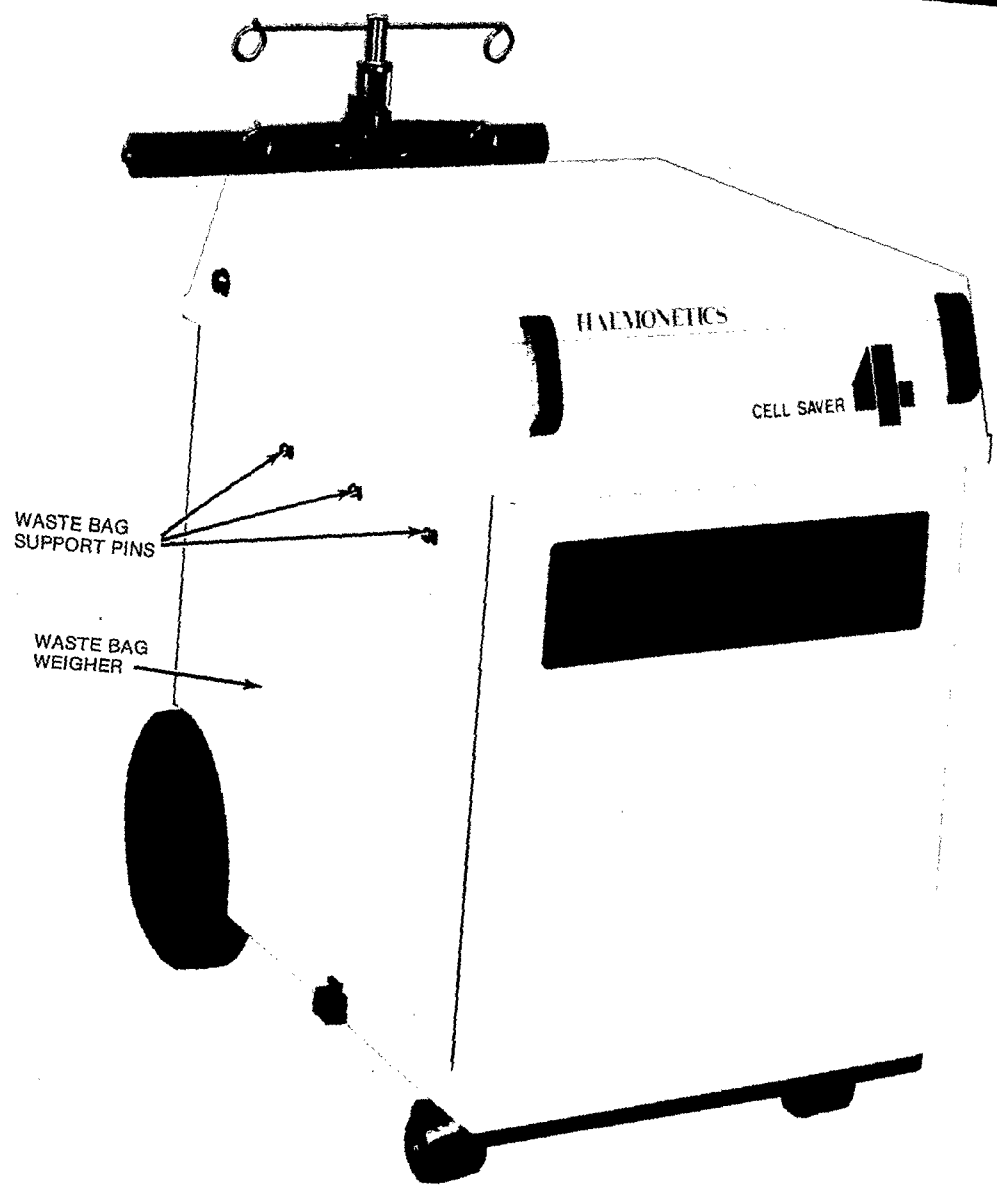

Figure 1-4, Cell Saver 4, cover closed

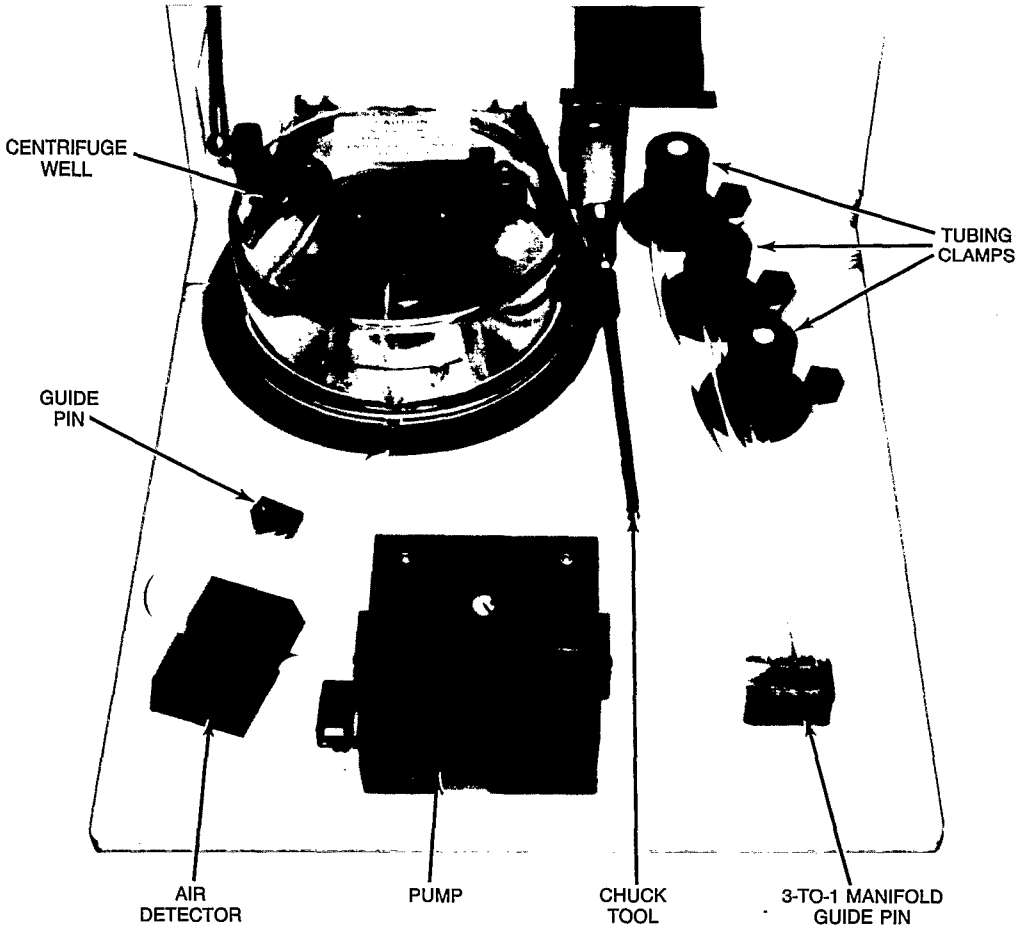

Figure 1-5, Cell Saver 4 deck

1.2.2 Disposables

Three types of fully integrated disposable sets as well as a variety of other disposables are available for use with the Cell Saver 4. The basic disposable selt is shown in Figure 1-6. The *Owner's Operating and Maintenance Manual* provides detailed information on the specifications of the disposable sets and other disposables. The list numbers and brief descriptions are given below.

List no.	Description
207	**Cell Saver® Collection Reservoir.** Provides a rigid container for the sterile colleciton and gross filtration of shed blood. Sterile, disposable, for single-patient use.
208	**Basic Aspiration and Anticoagulation Assembly.** Includes double-lumen suction tubing with step-down adapter and tubing studs. Sterile, disposable, for single-patient use.
210	**Autotransfusion Liner.** Sterile, disposable, for single-patient use.
217	**Basic Collection Pack.** Includes double-lumen suction tubing with a step-down adapter and tubing stubs, and Basic Autotransfusion Liner. Sterile, disposable, for single-patient use. **(NSN 6515-01-185-2406)**
219	**BCR-3000 Blood Collection Reservoir.** Filtered, sterile, disposable, for single-patient use.
240	**High Speed Y-set.** Includes 65-inch extension line and adapters. Used to interface the CS4 with bypass circuits. Sterile fluid path, disposable, for single-patient use.
241	**Basic High-Speed, Low Volume, Cell Saver Pack** Includes high-speed tubing harness, reinfusion bag, waste bag, and 125 ml centrifuge bowl. Sterile fluid path, disposable, for single-patient use.
243	**Basic High-Speed Cell Saver® Pack.** Includes high-speed tubing harness, reinfusion bag, waste bag, and 225 ml centrifuge bowl. Sterile fluid path, disposable, for single-patient use. **(NSN 6515-01-169-7785)**
246	**High-Speed Waste Bag, 10-liter capacity.** Sterile, disposable, for single-patient use.

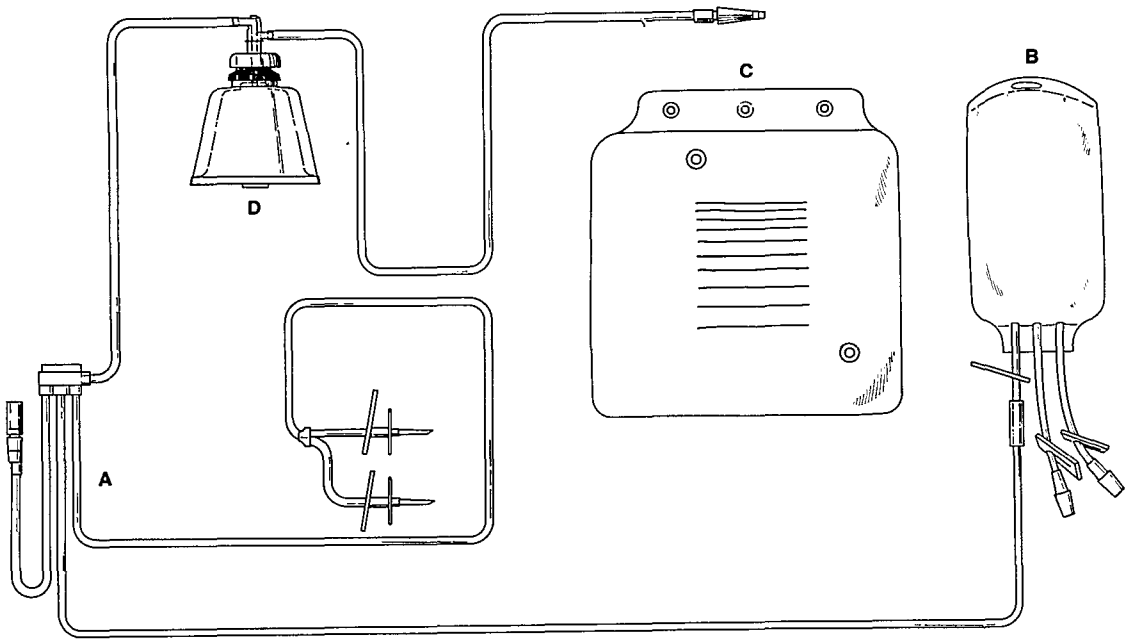

Note: The low volume set is identical except the bowl has a stepped core.

Figure 1-6, Basic high speed disposable set (list no. 243)

List no.	Description
250	**Cell Saver® Fast Pack** Includes Basic Basic Aspiration and Anticoagulation Assembly, List No. 208, Cell Saver Collection Reservoir, List No. 207, High Speed Y-set, List No 240, and Basic High-Speed Cell Saver Pack, List No. 243.
251	**Cell Saver® Fast Pack** Includes Basic Collection Pack, List No. 217, and Basic High-Speed Cell Saver Pack, List No. 243.
2100	**CSR-3.0 Autotransfusion Reservoir.**
2119	**CARD-H Bracket** for use with BCR-3000 (List no. 219).

The disposable set shown above, Figure 1-6, consists of the following components: A. tubing manifold, B. reinfusion bag, C. waste bag, D. centrifuge bowl. The bowl shown is a normal volume bowl. The low volume bowl has a stepped core.

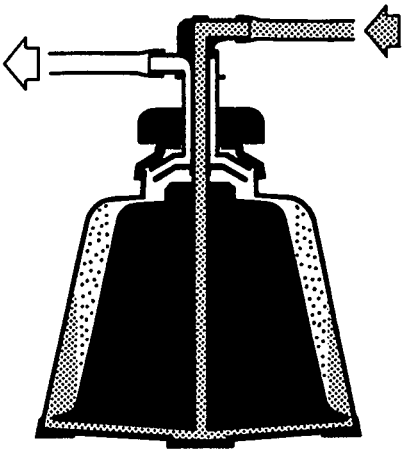

1. BLOOD IS PUMPED IN. SEPARATION BEGINS.

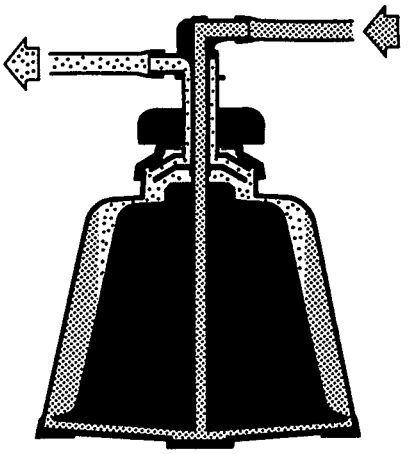

2. THE SUPERNATANT WASTES OVERFLOW. RBCs STAY IN THE BOWL.

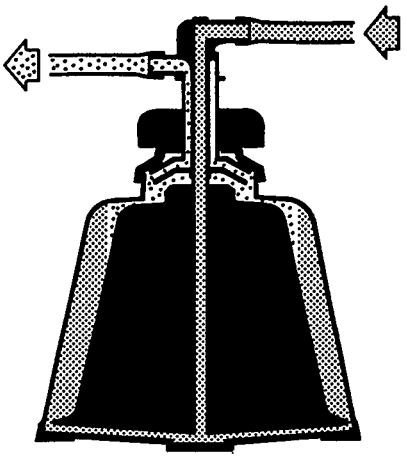

3. AS OVERFLOW CONTINUES, THE HEMATOCRIT IN THE BOWL INCREASES TO 50%-60%.

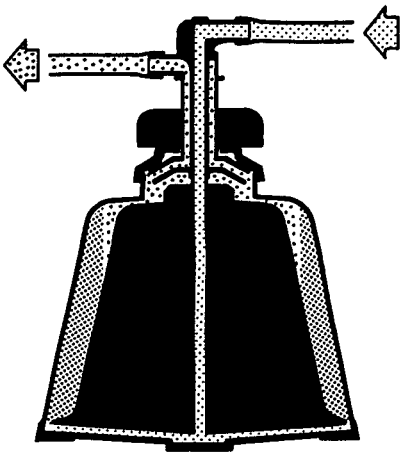

4. NORMAL SALINE CIRCULATES THROUGH THE RED CELL LAYER AND DISPLACES THE WASTE PLASMA.

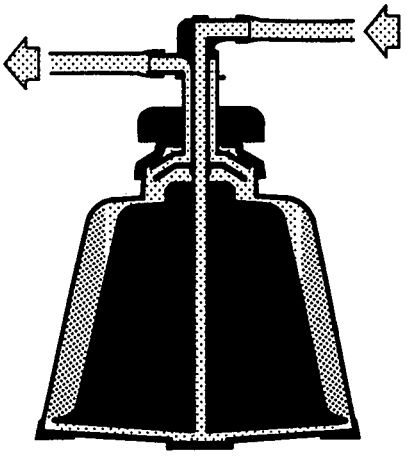

5. THE OVERFLOW RUNS CLEAR. FREE HEMOGLOBIN AND ANTICOAGULANT ARE IN THE WASTE BAG.

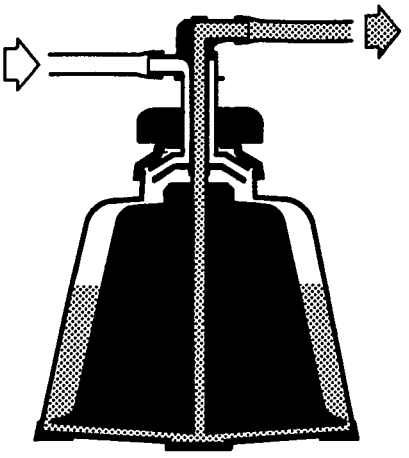

6. THE BOWL STOPS. WASHED, PACKED RBCs ARE PUMPED TO THE REINFUSION BAG.

Figure 1-7, How the bowl works

1.2.2.1 How the bowl works. (See Figure 1-7.)

The central component in all of the disposable sets is the centrifuge bowl. Two different types of centrifuge bowls are available: the normal-volume bowl and the low-volume bowl. The low-volume bowl is used for smaller patients, children, and orthopedic procedures. It allows the rapid processing of a lower volume of blood while maintaining a high hematocrit in the bowl and in the returned cells. The low-volume bowl uses a stepped core so that the optics will trip at the same point for both bowls. The *Owner's Operating and Maintenance Manual* explains the operation of the system in detail.

1.3 SPECIFICATIONS

1.3.1 Dimensions and weight

Height, cover open	43 inches (109.2 cm)
Height, cover closed	31 inches (78.7 cm)
Width	17 inches (43.2 cm)
Depth	29 inches (73.7 cm)
Weight	265 lb (120.2 kg)

1.3.2 Clearances required

Allow room at the front of the system for cooling air circulation, and at the left side (facing the front panel) so that the waste bag may expand as it fills.

1.3.3 Maneuverability and portability

Two stationary 8-inch (10.2 cm) wheels are located at the rear and two 2-inch (5.1 cm) dual castors are mounted at the front. A rear handle makes the unit easy to move from room to room. A collapsible handle, cord storage bracket, and closing cover allow the system to be made compact. Unobtrusive front and rear handles are provided for lifting. When the CS4 is in the close position it can easily fit into a small station wagon.

1.3.4 Primary power requirements

Voltage: 120/230 Vac switch-selectable.

Operating frequency: 47-63 Hz.

Current:

- at 120 Vac, 4 amps steady state; 8 amps surge
- at 230 Vac, 2 amps steady state; 4 amps surge

Storage temperature

- Minimum: –40°F (–40°C)
- Maximum: 130°F (55°C)

Chapter 2, Principles of Operation

Contents

Paragraph		Page
2.1	GENERAL	2-5
2.2	SAFETY PRECAUTIONS	2-5
2.2.1	Flammable locations	2-5
2.2.2	Electrical shock hazards; leakage current requirements	2-5
2.2.3	Rotating machinery	2-6
2.2.4	Communicable disease	2-6
2.2.5	Bowl misalignment	2-6
2.2.6	Restrictions to flow	2-6
2.2.7	Twists kinks and flat spots in tubing	2-7
2.2.8	Overheating	2-7
2.3	CONTROLS AND INDICATORS	2-8
2.3.1	Display	2-8
2.3.2	Control and indicators	2-8
2.4	SYSTEM BLOCK DIAGRAM	2-12
2.5	PRINTED CIRCUIT BOARDS	2-12
2.5.1	Motherboard	2-12
2.5.2	CPU printed circuit board	2-13
2.5.2.1	Microprocessor	2-13
2.5.2.2	Program memory	2-14
2.5.2.3	Timers	2-19
2.5.2.4	Interrupt control	2-20
2.5.2.5	Interrupt sequence	2-23
2.5.2.6	Input/output	2-23
2.5.2.7	Keyboard scanner	2-25
2.5.2.8	Expansion bus buffers	2-26
2.5.2.9	Status indicators	2-26
2.5.3	Expansion printed circuit board	2-27
2.5.3.1	Program memory	2-27
2.5.3.2	Data memory	2-29
2.5.3.3	I/O device 8156	2-30
2.5.3.4	Serial communications controller 8251A	2-30
2.5.3.5	A-to-D converter, 13-bit	2-30
2.5.3.6	Bridge input amplifiers	2-32
2.5.4	Input/Output printed circuit board	2-32
2.5.4.1	Output latches	2-32
2.5.4.2	Pump motor digital-to-analog (D/A) convertors	2-35
2.5.4.3	A/D convertor with multiplexer	2-35

Paragraph Page

2.5.4.4 Sound generator 2-36
2.5.4.5 Device decoding logic 2-38
2.5.4.6 Signal transfer 2-39
2.5.4.7 Bowl optics 2-39
2.5.4.8 Centrifuge motor control 2-50
2.5.5 Driver printed circuit board 2-59
2.5.5.1 System interconnections 2-59
2.5.5.2 Signal transfers 2-59
2.5.5.3 Signal buffers 2-59
2.5.5.4 Output drivers 2-60
2.5.5.5 Valve drivers 2-60
2.5.5.6 Pump control 2-63
2.5.5.7 Pump speed request input 2-63
2.5.5.8 Pump tachometer feedback 2-63
2.5.5.9 Error amplifier 2-66
2.5.5.10 PWM pump control 2-66
2.5.5.11 Drive circuit 2-67
2.5.5.12 Current limiting 2-68
2.5.5.13 Pump disable 2-68
2.5.5.14 Reversing relay 2-68
2.5.6 Centrifuge motor control printed circuit board 2-69
2.5.6.1 Speed sensors 2-69
2.5.6.2 Power control 2-69
2.5.6.3 Overspeed protection 2-70
2.5.6.4 Zero crossing detector 2-70
2.5.6.5 Braking 2-70
2.5.6.6 Indicators 2-70
2.6 PNEUMATIC PINCH VALVE 2-71
2.6.1 General description 2-71
2.6.2 Operation 2-71
2.6.3 Specifications 2-71
2.6.4 Pneumatic pinch valve tubing manifold 2-71
2.7 CENTRIFUGE COVER LATCH 2-71
2.7.1 Locking mechanism 2-72
2.8 CENTRIFUGE ASSEMBLY 2-74
2.9 PUMP MOTOR GENERATOR ASSEMBLY 2-75
2.10 AIR DETECTOR 2-75
2.11 POWER SYSTEM 2-75
2.11.1 Transformer 2-76
2.11.2 Power supply interface board 2-76
2.11.3 Switching power supply 2-76

Contents

Figure		Page
2-1	Typical display message	2-8
2-2	System controls	2-8
2-3	System block diagram	2-11
2-4	CS4 printed circuit boards in card cage	2-12
2-5	Motherboard pcb connectors	2-13
2-6	Central processing unit (CPU) board	2-14
2-7	CPU pcb functional block diagram	2-15
2-8	8085 AH (Z1) clock waveforms	2-16
2-9	8282 (Z3) latch	2-17
2-10	8085 (Z1) reset function	2-17
2-11	8156 (Z7) block diagram	2-20
2-12	8253 (Z9) block diagram	2-20
2-13	8156 (Z7) clock pulse	2-21
2-14	8259 (Z8) block diagram	2-22
2-15	Interrupt (Z8) timing	2-24
2-16	8279 (Z10) block diagram	2-25
2-17	8279 (Z10) keyboard scan timing	2-26
2-18	Expansion board	2-27
2-19	Expansion board block diagram	2-28
2-20	Input/Output (I/O) board	2-33
2-21	I/O block diagram	2-34
2-22	AD 7524 DAC (Z4)	2-35
2-23	D/A conversion table	2-36
2-24	A-to-D block diagram	2-37
2-25	76489 (Z11) programmable sound generator block diagram	2-38
2-26	76489 (Z11) data transfer timing	2-39
2-27	Cover switch flowchart	2-40
2-28	Pump counter flowchart	2-40
2-29	Air detector flowchart	2-41
2-30	Air detector timing	2-42
2-31	Bowl optics block diagram	2-42
2-32	Bowl transmission characteristics	2-43
2-33	Bowl optics block diagram	2-44
2-34	Bowl optics waveforms	2-44
2-35	Optics frequency standard and logic timing	2-47
2-36	Centrifuge motor control block diagram	2-51
2-37	Timing diagram SCR firing run mode	2-52
2-38	Timing diagram brake mode	2-52
2-39	Zero crossing circuit block diagram	2-54
2-40	Centrifuge assembly, cutaway view	2-55
2-41	Driver board	2-60
2-42	Driver pcb block diagram, part A	2-61
2-43	Driver pcb block diagram, part B	2-62

Contents

Figure		Page
2-44	Side view of pneumatic valves	2-64
2-45	Block diagram, pump control	2-65
2-46	Pneumatic valve tubing manifold	2-72
2-47	Centrifuge cover latch	2-73
2-48	Ultrasonic transmission	2-77
2-49	Air detector assembly	2-77
2-50	Power system block diagram	2-78

Table		Page
2-1	Cell Saver 4 Controls	2-9
2-2	EPROM Jumpers	2-16
2-3	Processor Memory Map	2-18
2-4	Processor I/O Map	2-19
2-5	Output Latches	2-32
2-6	Port 2 8749	2-56

2.1 GENERAL

The purpose of this chapter is to identify both the internal and external components of the Haemonetics® Cell Saver® 4 Autologous Blood Recovery System (CS4) and to explain the principles of operation. For detailed information on the use of the machine and installation of disposables, refer to the *Owner's Operating and Maintenance Manual.*

The following paragraphs outline precautions that must be taken to ensure safe operation of the CS4 while it is being serviced. For safety precautions to be followed during operation with a patient refer to the *Owner's Operating and Maintenance Manual.*

2.2 SAFETY PRECAUTIONS

2.2.1 Flammable locations

The CS4 should be used only in locations which are free of flammable gases and vapors.

Warning

The CS4 should never be used in the presence of flammable agents. Furthermore, it should not be connected to or disconnected from electrical power in the presence of flammable agents.

2.2.2 Electrical shock hazards; current leakage requirements

Inside the CS4 cabinet are various electrical terminal strips and other conductive components. Contact with any of these components while the power is connected could result in electrical shock. Do not remove any panels with out first turning off and unplugging the machine from the wall outlet.

Warning

Check leakage current routinely.

Excessive electrical leakage current is a primary cause of electrical shock hazard due to personnel making contact with any exposed portion of the equipment.

Each instrument is carefully checked during the final inspection to verify that leakage current is less than 100 microamperes. The owner should have a leakage current test repeated routinely to ensure that the machine continues to qualify under the 100 microampere standard. Particular attention should be given to leakage current after an event such as a saline or blood spill or a major voltage surge in the house electrical system has occurred.

Because of the high conductivity of electrolytes, avoid touching any portion of the system with wet hands. Always work with clean, dry hands.

2.2.3 Rotating machinery

It must be recognized that even small, rapidly rotating parts have enough kinetic energy to cause severe injury if any part of the person or clothing gets caught in them. As a safety feature, the CS4 is equipped with a pneumatic cover interlock which will not allow the centrifuge cover to be opened if the centrifuge is spinning.

Warning

Persons operating this equipment or working nearby should take the standard precautions applicable to all rotating machinery.

2.2.4 Communicable diseases

Despite the application of all available tests to screen for communicable disease such as hepatitis, syphilis, or AIDS, there is always the risk that the blood being processed is infected. Treat all blood as though it were infected; always clean up spilled blood **immediately**.

2.2.5 Bowl misalignment

Warning

Never operate the CS4 when the bowl wobbles severely, turns with severe eccentricity, is improperly aligned, or makes excessive noise.

Note: Severe eccentricity is defined as more than 1/64 (0.040 cm) of an inch "run out," which is easily detected by the unaided eye.

If the bowl is allowed to operate while improperly seated or not properly aligned, the stationary and rotating parts of the bowl's seal will cause abnormal friction. The friction may generate enough heat to cause hemolysis. If these conditions occur, the blood being processed cannot be regarded as safe for reinfusion.

2.2.6 Restrictions to flow

Warning

No restriction to flow can be permitted in the effluent line.

If the outlet port is inadvertently clamped off, pressure will build up in the processing chamber to such an extent that the rotary seal will be raised like a safety valve to release pressure. This will result in the loss of the pocket of trapped air normally present at the very top of the bowl and wetting of the rotary seal faces with blood, and the functional characteristics of the rotary seal may become altered. Heating and wear effects may become quite noticeable, and under this circumstance, the contents of the bowl cannot be considered appropriate for reinfusion.

Warning

Avoid blocking any tubing carrying blood from the pump. The buildup of pressure in the tubing can cause a leak resulting in the wide dispersal of blood.

Observe the Waste bag to verify that the accumulation of air in the bag is not being prevented by either a flow restriction or an air leak.

2.2.7 Twists kinks and flat spots in tubing

A careful check of the tubing should be carried out to make certain that each section is in the correct location and proper position on the machine, and that all tubing is free of twists, kinks, or flat spots. Working the pump against a severe flow restriction may result in high levels of hemolysis if the blood line is restricted or in blood clotting if the anticoagulant line is restricted. Please note that minor cosmetic imperfections in the tubing are normal and do not interfere with processing.

2.2.8 Overheating

Overheating of the centrifuge chuck, which might be injurious to red cells in the bowl or nearby tubing passageways can occur as a consequence of defective bearings, seals, or lubrication. It is recommended that the operator feel the chuck with his hand to detect any evidence of overheating each time a bowl is removed at the end of a procedure. If any portion of the upper surface of the chuck is found to be above 37° Celsius (98.6° F), the machine should be serviced before further use.

Warning

If, during a procedure, it is discovered that any portion of the equipment near the blood has been significantly overheated, the red cells should be regarded as unsafe for reinfusion.

2.3 CONTROLS AND INDICATORS

2.3.1 Display

The CS4 is provided with a display window which provides information such as shown in Figure 2-1. The top line provides general information regarding the operation of the system such as current operating mode, while the second line provides specific system status information, such as pump speed, centrifuge speed, and number of cycles in progress as a ratio of cycles programmed.

```
FILL            AUTO            <STOPPED>

PUMP SPD=500    CENT SPD=0      NORM @1:2
```

Figure 2-1, Typical display message

2.3.2 Controls and indicators

The system controls and indicators are shown in Figure 2-2. Table 2-1 identifies the controls and explains their functions. For a more detailed description of the controls and indicators, consult the *Cell Saver® 4 Owner's Operating and Maintenance Manual.*

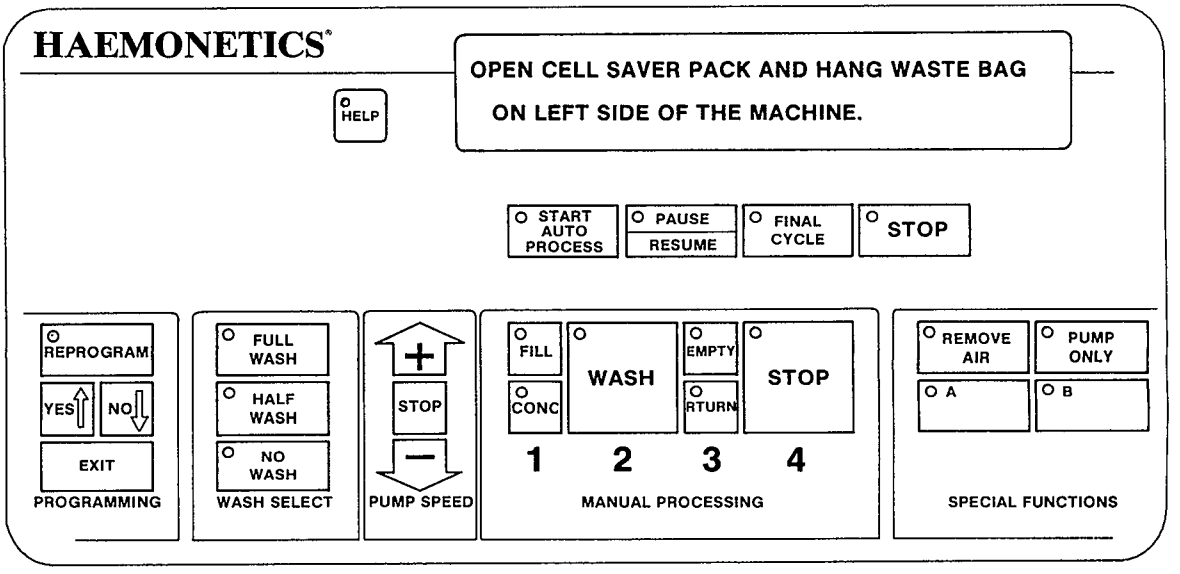

Figure 2-2, System controls

Table 2-1
Cell Saver 4 controls

Control	*Function*
ON/OFF	Powers machine on and off. Serves as a circuit breaker.
HELP	Provides setup instructions upon power up, provides prompts and messages during operation.
AUTOMATIC CONTROLS	
START/ AUTO PROCESS	Initiates the first cycle, places the system in the automatic mode.
PAUSE/ RESUME	Stops pump without losing separation. Resumes operation when PAUSED or STOPPED. Pressing before processing has begun will open and close the clamps to allow tubing to be installed.
FINAL CYCLE	Selected when bowl is less than full. Provides the operator with four options: 1. concentrate, 2. proceed to WASH, 3. STOP and wait for more blood loss, or 4. STOP and discard. Only available when PAUSED or STOPPED in the automatic FILL or CONCENTRATE mode.
STOP	Stops pump and centrifuge, closes all clamps. Pressing RESUME will restart procedure at the point at which it was STOPPED.
PROGRAMMING CONTROLS	
REPROGRAM	Cycles through the operating parameters.
YES	Allows affirmative responses, raises values.
NO	Allows negative responses, lowers values.
EXIT	Leaves the programming function.
WASH SELECTION CONTROLS	
FULL WASH	Will wash with programmed volume.
HALF WASH	Will wash with one-half of programmed volume. Only to be used when time is critical.

Table 2-1
Cell Saver 4 controls

Control	*Function*
NO WASH	Will not wash. Only to be used when time is critical.
PUMP SPEED	
+	Raises the pump speed in increments of 25 ml/min.
STOP	STOPS the pump. Does not stop the centrifuge.
–	Lowers the pump speed in increments of 25 ml/min.
MANUAL PROCESSING	
FILL	Places CS 4 in the manual FILL processing mode.
CONC	Places CS 4 in the manual CONCENTRATE processing mode.
WASH	Places CS 4 in the manual WASH processing mode.
EMPTY	Places CS 4 in the manual EMPTY processing mode.
RTURN	Places CS 4 in the manual RETURN processing mode.
STOP	STOPS processing.
SPECIAL FUNCTIONS	
REMOVE AIR	Overrides the air detector, opens blue clamp, uses pump to draw air out of the reinfusion bag. Requires constant finger contact.
PUMP ONLY	Gives operator control of the pump. Only available when the machine is in the READY AUTO mode.
A	Used with PUMP ONLY to respond to menu choices.
B	Used with PUMP ONLY to respond to menu choices.

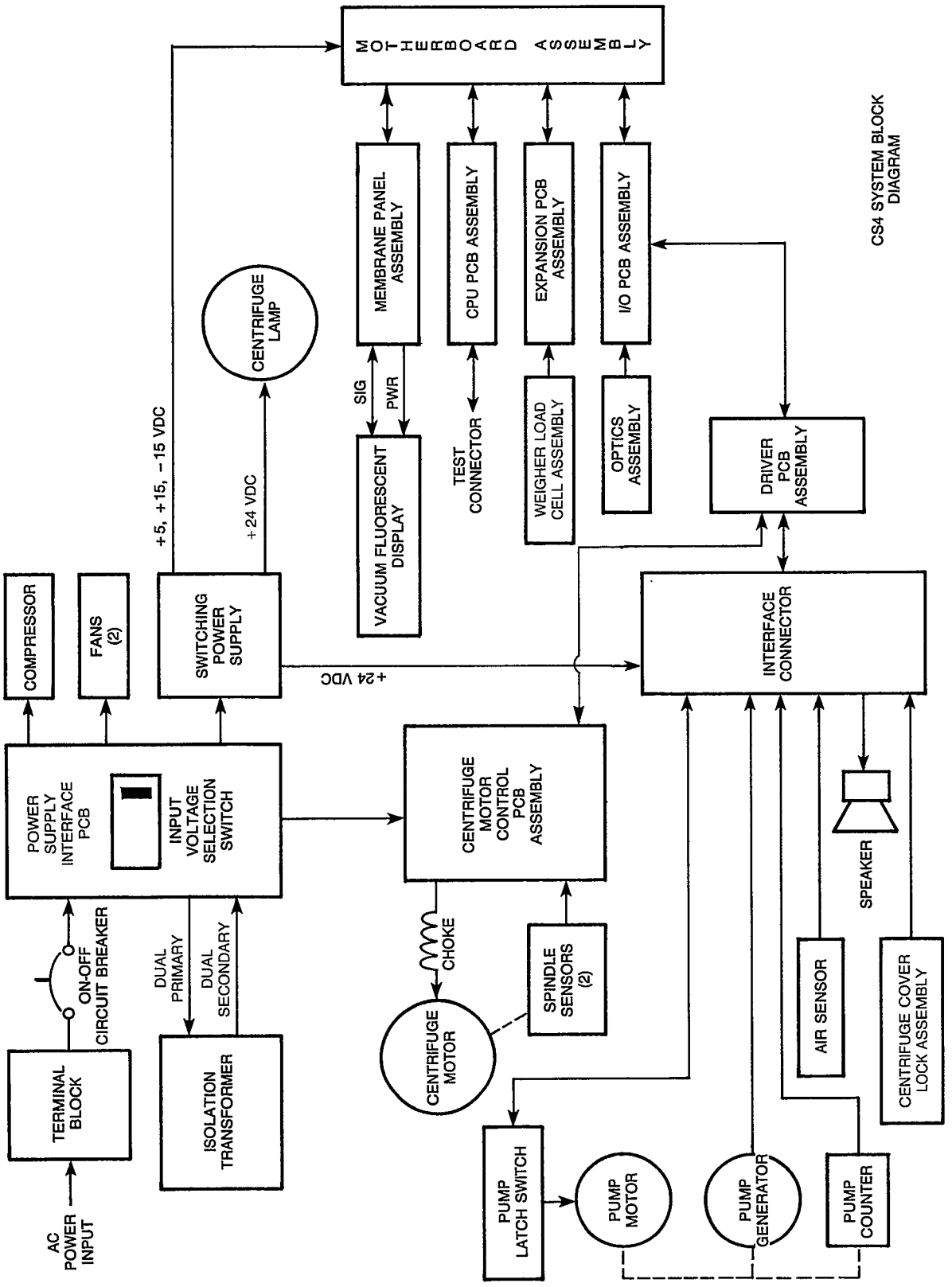

Figure 2-3, System block diagram

2.4 SYSTEM BLOCK DIAGRAM

The system block diagram given as Figure 2-3 illustrates the general interaction within the CS4. As shown in this illustration, the operator interacts with the system through a keypad and a display screen (contained on the front panel).

2.5 PRINTED CIRCUIT BOARDS

The main printed circuit boards (pcb) used with the CS4 are contained in the card cage as shown in Figure 2-4. These pcbs include the following:

- Processor (CPU) board
- Expansion (EXP) board
- Input/Output (I/O) board
- Driver (DRV) board

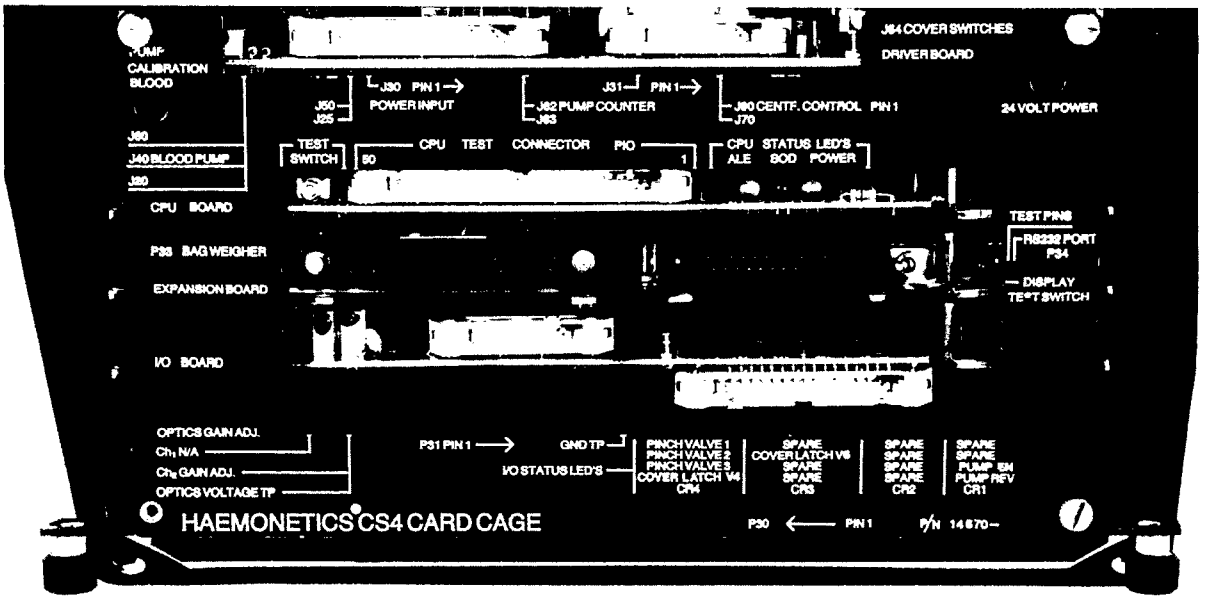

Figure 2-4, CS4 printed circuit boards in card cage

2.5.1 Motherboard (Part No. 13582-00)

Three of the four circuit boards of the card cage are plugged into connectors on the motherboard which provides the interface between individual cards. (See Figure 2-5.)

In addition to board interconnection, the motherboard provides distribution functions including alphanumeric and numeric displays, switch illumination, membrane panel interface, power distribution, and signal interconnection.

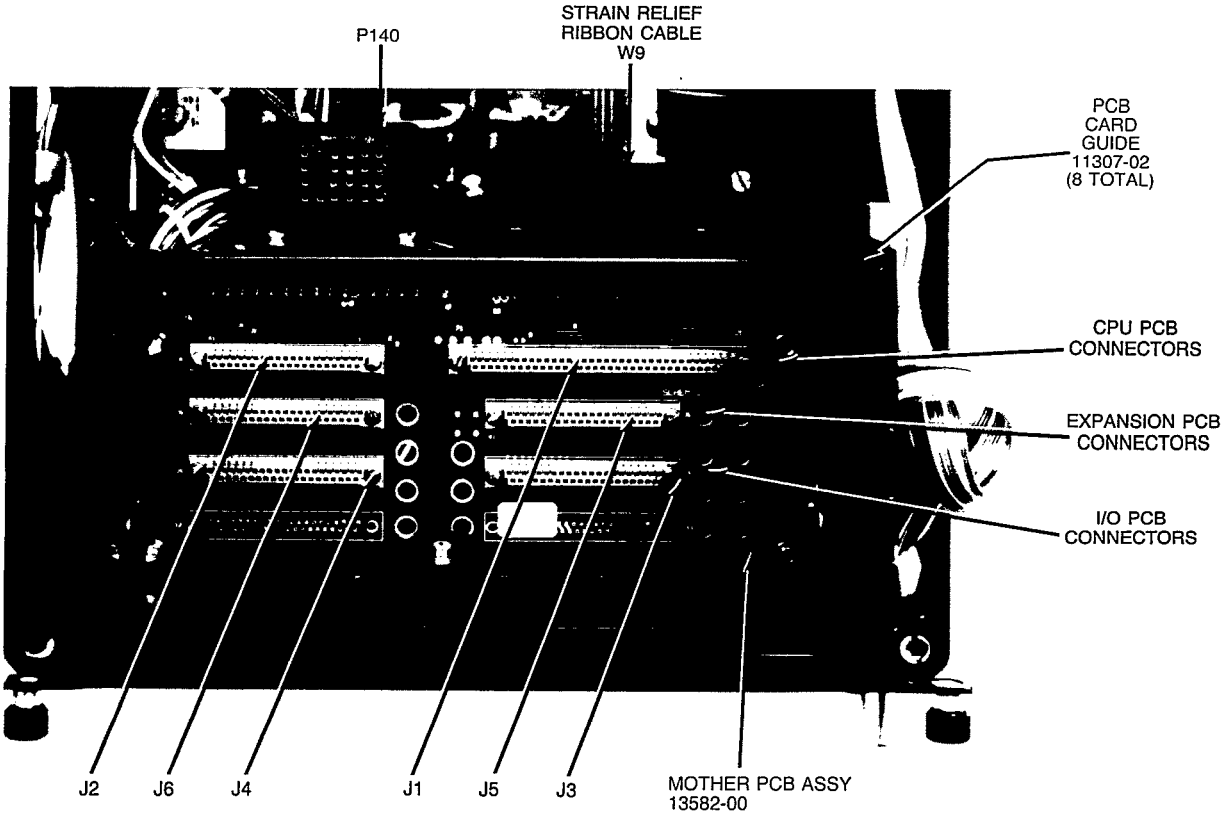

Figure 2-5, Motherboard pcb connectors

2.5.2 CPU printed circuit board (Part No. 13072-00) (See Figure 2-6.) This assembly contains the system CPU including processor, program memory, timers, interrupt control, I/O capacity, expansion bus and status indicators. A functional block diagram of the CPU board is provided as Figure 2-7.

2.5.2.1 Microprocessor. The microprocessor used is an Intel 8085AH (Z1). The 8085AH is a complete 8-bit parallel central processor. It is designed with H-channel depletion modes and requires a single five volt supply. A 4.0 MHz crystal is provided to produce an internal operating frequency of 2 MHz. This signal is used as a system clock frequency (see Figure 2-8).

The 8085AH uses a multiplexed data bus. The address is split between the higher 8-bit address bus (A8-A15) and the lower 8-bit address/data bus (AD0-AD7). During the first cycle the address is sent out. The lower eight bits are latched into the peripherals by the Address Latch Enable (ALE). This is accomplished by the 8282 latch (Z3). (See Figure 2-9.)

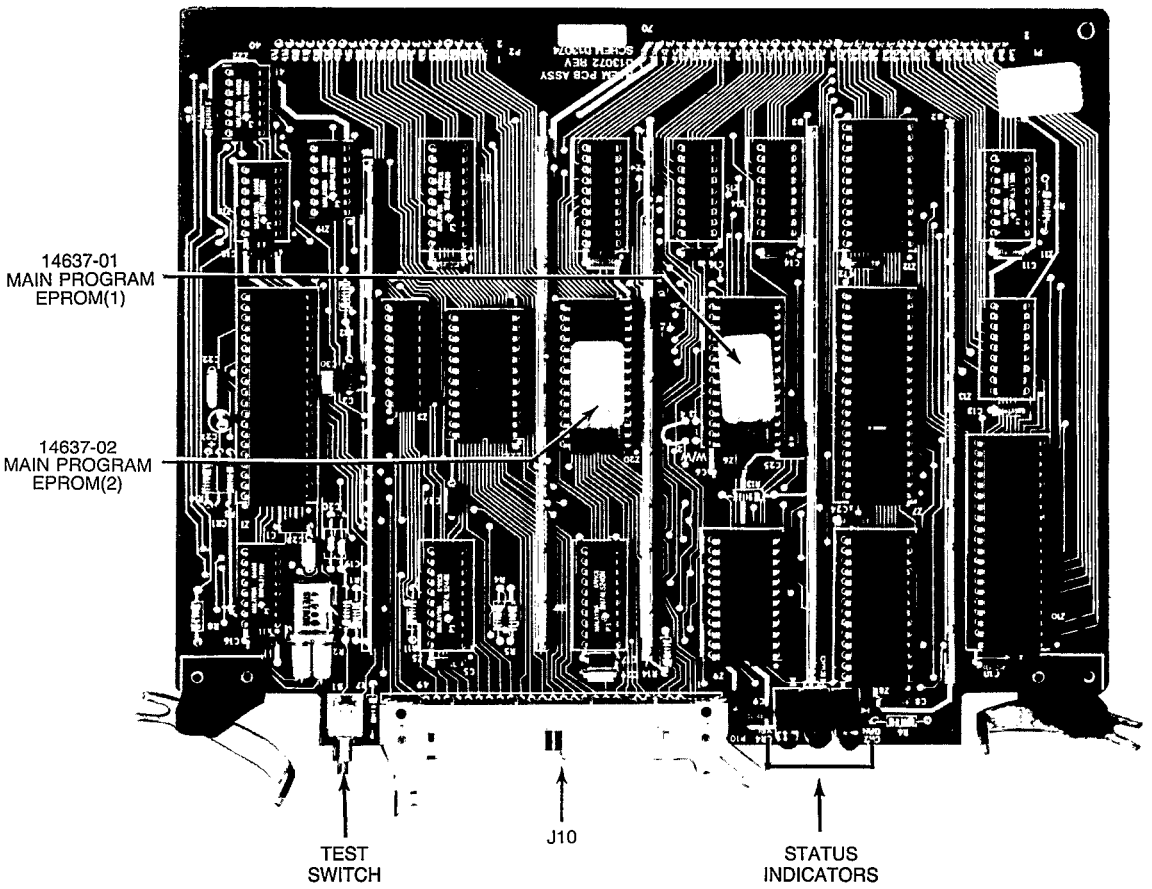

Figure 2-6, Central Processing Unit (CPU) board

Data present at the input DI0-DI7 is latched at the output D00-D07 when ALE goes low. During the rest of the machine cycle, the data bus is used for memory or I/O data. The 8085AH provides RD, WR, and I/O-memory signals for bus control. For versatile interrupt control, both hardware restart interrupts (RST 5.5, 6.5, 7.5 and TRAP) and software driven interrupts (INTA) are provided.

The power reset function is created by the Schmitt-action input, RESET IN. Besides causing internal resetting of the processor, it is provided as the signal RESET OUT which is used to reset other circuit components after initial power on (see Figure 2-10).

2.5.2.2 Program memory. Program memory is provided in the form of EPROM (Erasable Programmable Read Only Memory) located at Z6, and Z20. These memory storage devices are fabricated without data in them. Therefore, the EPROMs are programmed by Haemonetics with the specific data needed to operate the computer system.

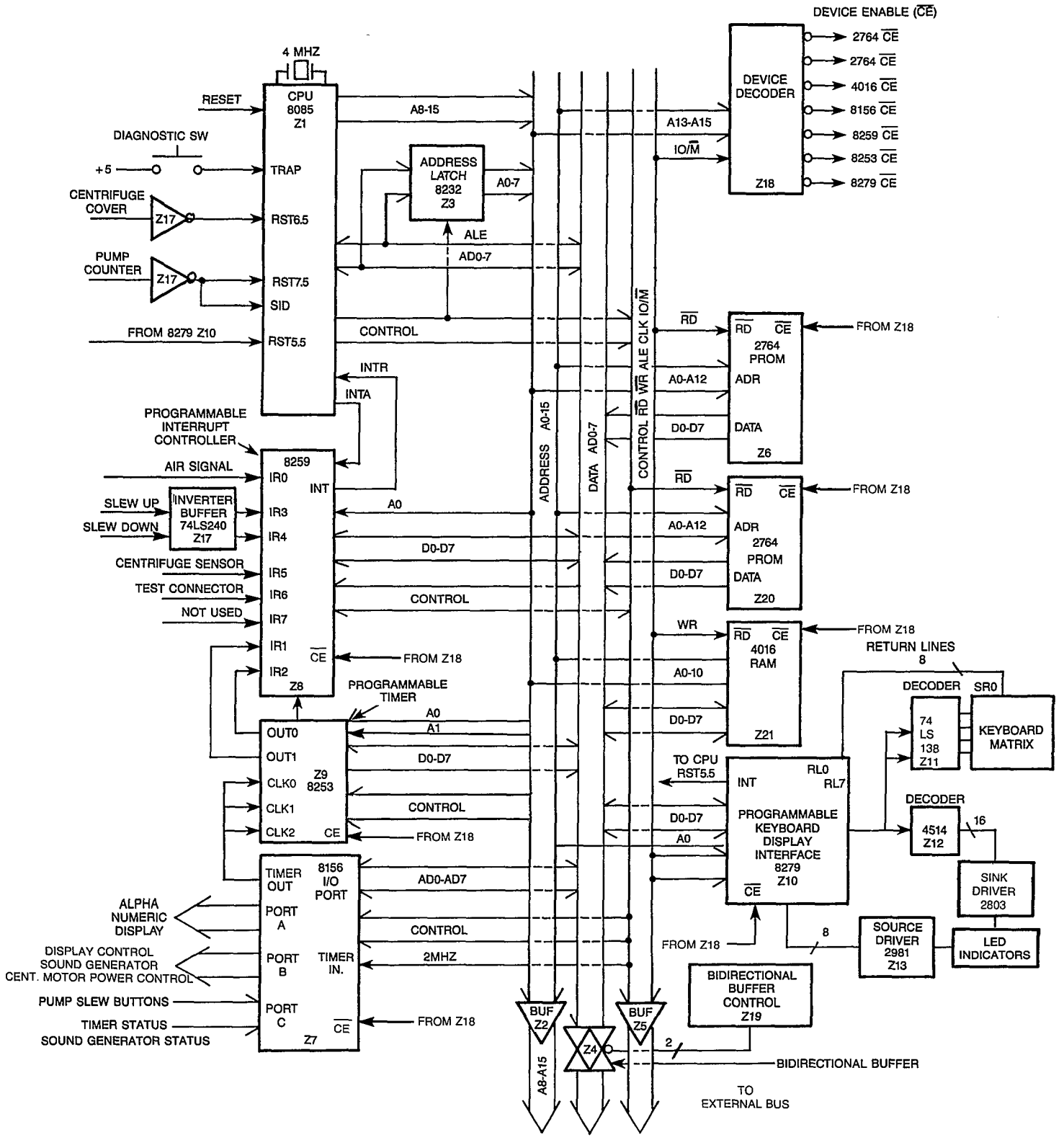

Figure 2-7, CPU pcb functional block diagram

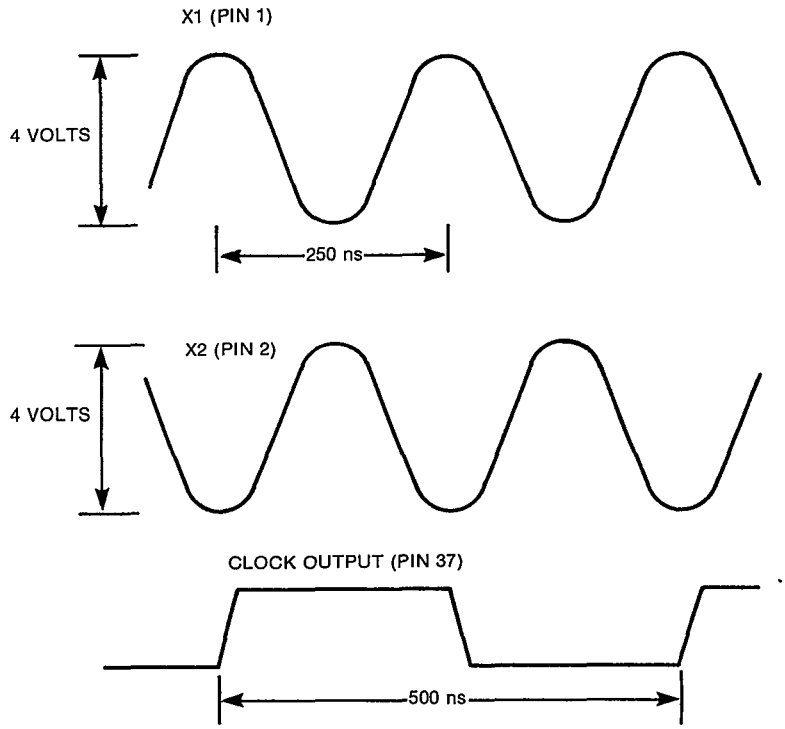

Figure 2-8, 8085AH (Z1) clock waveforms

After programming, the EPROM becomes specific to an application and takes on a unique Haemonetics program number. This program number is printed on an opaque label placed on top of the device. This label also performs the function of covering the access window of the device. If the unprotected window is exposed to sufficient UV light, it will "clear" (be erased) and can then be reprogrammed with new data. Z6 has the capacity to hold several sizes of EPROMs adding to the circuit flexibility. The sizes are detailed below in Table 2-2 which also lists the EPROM jumpers for the various sizes of EPROMs.

Table 2-2
EPROM Jumpers

P/N	Description	Jumpers
2708	1K x 8 Bit	1 to 4
2716	2K x 8 Bit	1 to 4
2732	4K x 8 Bit	2 to 3
2764	8K x 8 Bit	2 to 3

The jumpers are located directly next to the IC socket. Presently one 27128 EPROM and four 2764 EPROMs are used in the CS4. Two 2764

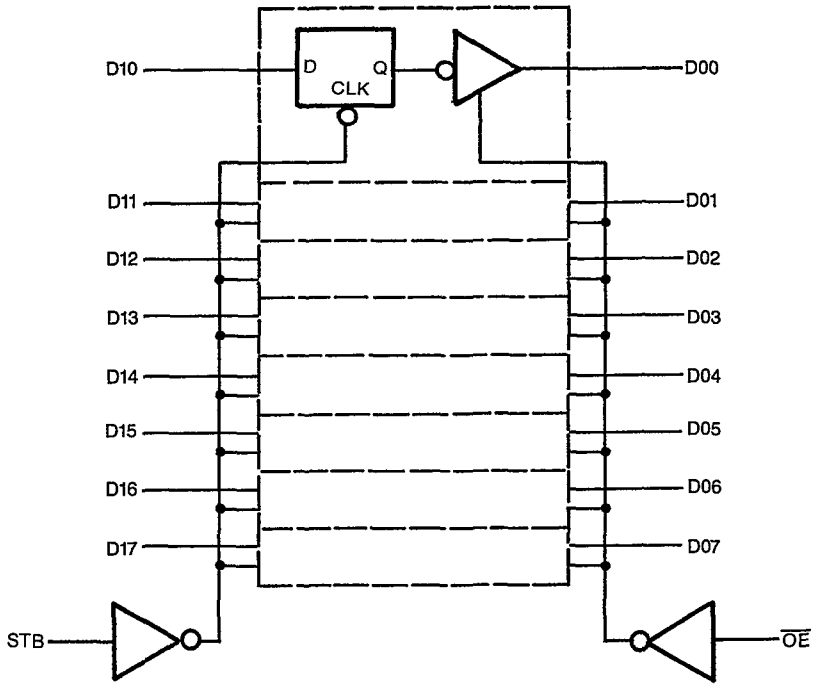

Figure 2-9, 8282 (Z3) Latch

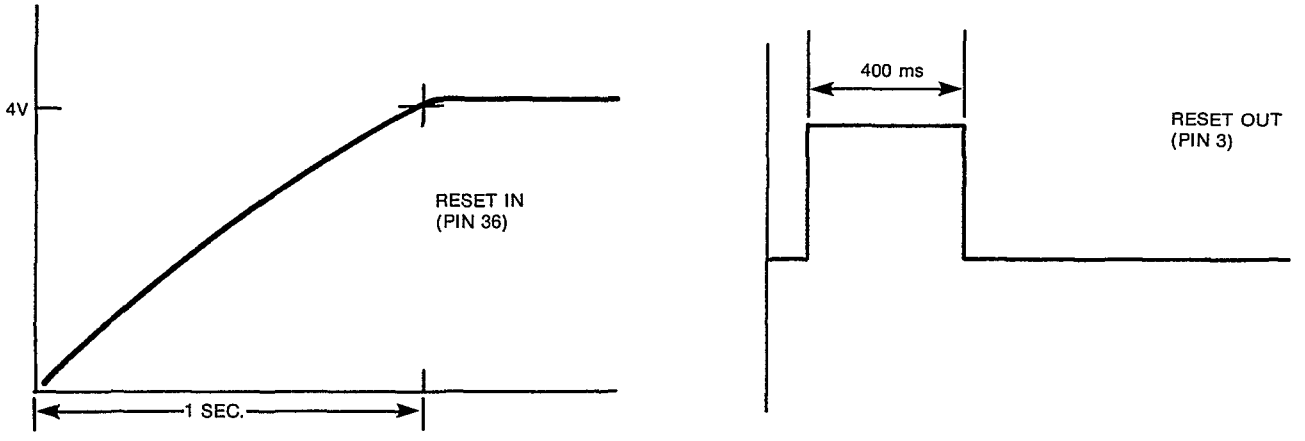

Figure 2-10, 8085 (Z1) reset function

EPROMs on the CPU board, two 2764's and one 27128 on the expansion board. IC select decoding is provided by Z18B, Z18C, and Z16.

EPROM memory on the CPU board is selected whenever A15 and IO/M are low. Expansion EPROM memory is selected whenever A15 is high

and IO/M are low. Refer to Table 2-3, Processor memory map, for address information.

Table 2-3
Processor Memory Map

Address (Hex)	Device Type	Location
0000–1FFF	EPROM	CPU Z6
2000–3FFF	EPROM	CPU Z20
A000–BFFF	EPROM	EXP Z11
C000–DFFF	EPROM	EXP Z12
E000–FFFF	EPROM	EXP Z13*
6000–67FF	RAM	CPU Z21
4000–40FF	RAM	CPU Z7
9800–9BFF	non volatile RAM no write protection	EXP Z10
9C00-9FFF	non volatile RAM write protected	EXP Z10
8600	8255 command register	I/O Z9
8000	8255 port A	I/O Z9
8200	8255 port B	I/O Z9
8400	8255 port C	I/O Z9
8800	8156 command register	EXP Z14
8801	8156 port A	EXP Z14
8802	8156 port B	EXP Z14
8803	8156 port C	EXP Z14
8804	8156 timer register low	EXP Z14
8805	8156 timer register high	EXP Z14
8901	8251 command register	EXP Z15
8900	8251 data register	EXP Z15
8A00	13 bit A to D MUX channel and gain	EXP
8A01	13 bit A to D start conversion	EXP
8A00	LSD data A to D	EXP U10
8A01	MSD data A to D	EXP U10
9000	8 bit A to D Chan 1	I/O Z1
9001	8 bit A to D Chan 2	I/O Z1
9002	8 bit A to D Chan 3	I/O Z1
9003	8 bit A to D Chan 4	I/O Z1
9004	8 bit A to D Chan 5	I/O Z1
9005	8 bit A to D Chan 6	I/O Z1
9006	8 bit A to D Chan 7	I/O Z1
9007	8 bit A to D Chan 8	I/O Z1

*Z13 is a 27128 that is page addressed. Refer to the Expansion board description for more information.

The CPU board contains a 2K x 8 static RAM located at Z21. This IC is used to store temporary in process data elements and is the memory device used to implement the main CPU's stack. Additional temporary memory storage (RAM) is provided by the 8156 (Z7). (See Figure 2-11.) Besides being a memory device, the 8156 is also a programmable I/O device. After powering up the main processor programs, Port A and B are outputs, and Port C is input. The third function of this device is that of a clock prescalar. Refer to Table 2-3 for memory address information.

2.5.2.3 Timers. Time delays are accomplished through the use of the 8253 (Z9). (See Figure 2-12.) This device is a programmable timer/ counter organized as three independent 16-bit counters, each with a count rate of up to 2 MHz. The CLK input to this unit is derived from the timer output of the 8156 (Z7). This allows the 8156 to divide, under software control, its input clock down to drive the 8253.

The 8156 clock input is provided by the internal oscillation (2 MHz) of the processor (see Figure 2-13). One output of the 8253 (OUT 2) is sent off-board for future expansion. OUT 1 and OUT 2 are connected to the 8259 interrupt controller, and Port C of the 8156. This allows the processor either to be interrupted by time-out conditions, or simply input the status through Port C of the 8156. Refer to Table 2-3, Processor memory map for memory address information. Refer to Table 2-4, Processor I/O map, for port address information.

Table 2-4
Processor I/O Map

Address (Hex)	Device Type	Location
08	8156 command register	CPU Z7
09	8156 port A	CPU Z7
0A	8156 port B	CPU Z7
0B	8156 port C	CPU Z7
0C	8156 timer register low	CPU Z7
0D	8156 timer register high	CPU Z7
11	7524 D to A latch	I/O Z4
12	8311 output latch	I/O Z2
14	8311 output latch	I/O Z3
2B	8253 command register	CPU Z9
28	8253 timer 1 register	CPU Z9
29	8253 timer 2 register	CPU Z9
48	8259 register A	CPU Z8
49	8259 register B	CPU Z8
68	8279 data register	CPU Z10
69	8279 command register	CPU Z10

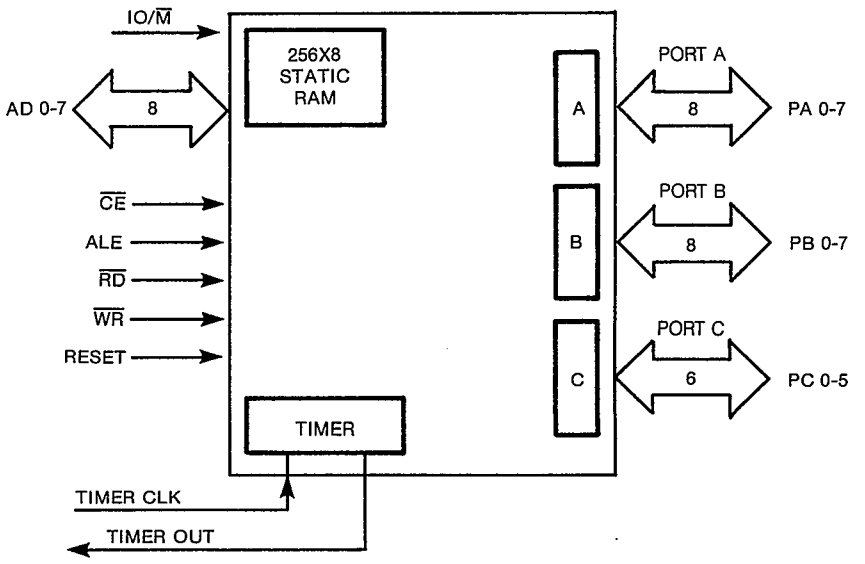

Figure 2-11, 8156 (Z7) block diagram

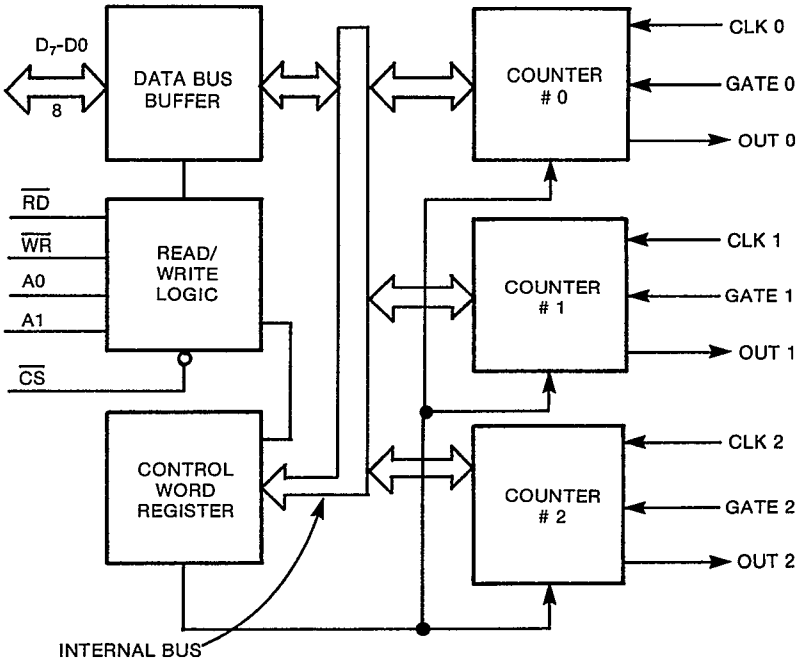

Figure 2-12, 8253 (Z9) block diagram

2.5.2.4 Interrupt control. The 8259 (Z8) functions as an overall manager of the expansion interrupt system. It accepts requests from the peripheral system, determines which of the incoming requests has a higher priority than the level currently being serviced, and issues an interrupt to the CPU board on this determination.

The 8085AH has five interrupt inputs: RST 5.5, RST 6.5, RST 7.5, TRAP and INTR. Each of the three restart (RST) inputs has a programmable

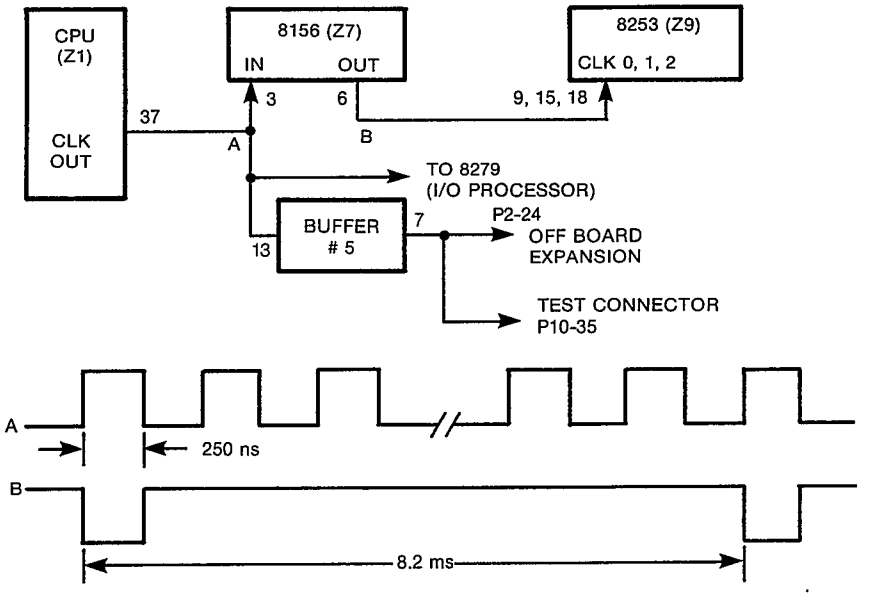

Figure 2-13, 8156 (Z7) clock pulse

mask and causes the internal execution of a branch to the restart address. The trap performs the same way, but it is not maskable.

a. RST 5.5 causes a branch to 2C hex, and is triggered by the keyboard I/O controller, Z10. This interrupt is used to signal the processor that a front panel control has been activated.

b. RST 6.5 causes a branch to 34 hex and it is not used on the CS4.

c. RST 7.5 causes a branch to 3C hex and is triggered by the pump counter. Activation of the Hall effect pump counter is sensed by this input, and is also applied to the processor serial input line (SID) so the length of the activation can also be sensed. There are 28 pump interrupts per pump revolution.

d. TRAP causes a branch to 24 hex and is triggered by the onboard red test switch. This is included to activate software diagnostic programs embedded in the main system program memory.

Resets 5.5 and 6.5 have high-level sensitive inputs. RST 7.5 and TRAP are rising-edge sensitive inputs requiring only a pulse to set an internal flip flop.

Additional system interrupts are provided by the 8259 (Z8). (See Figure 2-14.) This device has eight maskable inputs whose priorities are programmable. Activation of a non-masked input causes the 8259 to force a CALL instruction, and jump address to the main processor. This control is accomplished by use of the INTR input of the processor.

a. IR0 is connected to the ultrasonic air detector.

b. IR1 is the interrupt input for Timer #1 of the 8253. This signal can also be input to the processor through Port C of the 8156.

c. IR2 is connected to Timer #0 in the same manner as IR1.

d. IR3 is connected to the Slew Up button through the inverting buffer Z17A. This signal is also applied to Port C of the 8156. Slewing is initiated by the interrupt control, and Port C is sampled to observe if the button continues to be held down.

e. IR4 functions in the same manner as IR3, but it is connected to the Slew Down button.

f. IR5 is connected to the backup centrifuge spindle speed sensor.

g. IR6 is connected to P10 so that a test connector can issue an independent interrupt.

h. IR7 is not used.

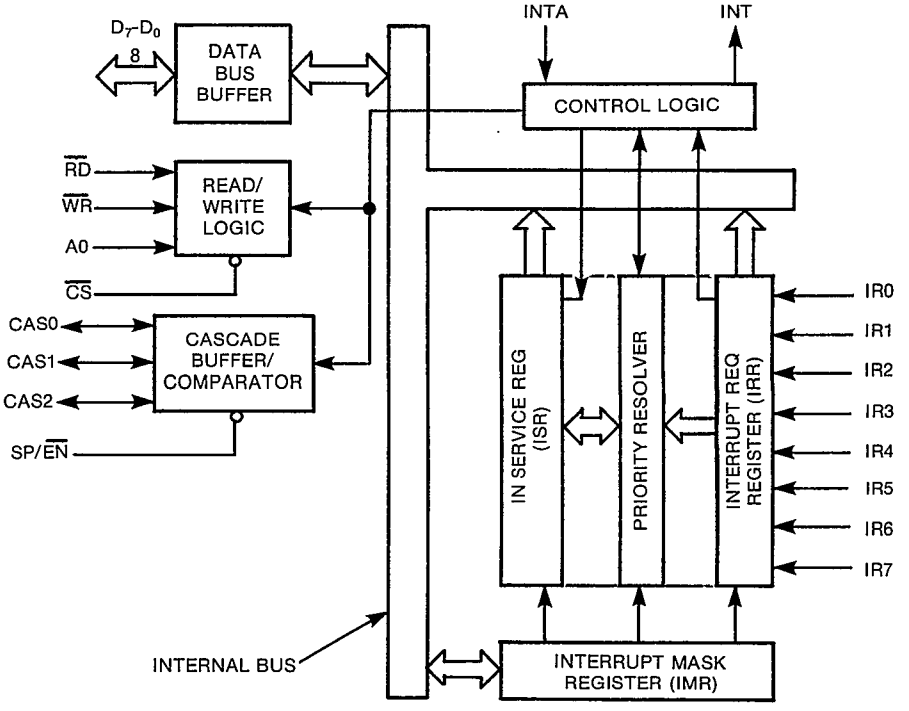

Figure 2-14, 8259 (Z8) block diagram

2.5.2.5 Interrupt sequence. The steps below outline the sequence followed when an interrupt is issued. Figure 2-15 illustrates this process.

1. One or more of the interrupt lines (IR0-7) are raised high, setting the corresponding IRR bit(s).

2. The 8259 evaluates these requests, and sends an INT to the CPU, if appropriate.

3. The CPU acknowledges the INT and responds with an INTA pulse.

4. Upon receiving and INTA from the CPU group, the highest priority ISR bit is set, and the corresponding IRR bit is reset. The 8259 will also release a CALL instruction code (11001101) onto the 8-bit data bus through its D7–0 pins.

5. This CALL instruction will initiate two more INTR pulses to be sent to the 8259 from the CPU group.

6. These two INTA pulses allow the 8259 to release its preprogrammed subroutine address onto the data bus. The lower 8-bit address is released at the second INTA pulse.

This completes the 3-byte CALL instruction released by the 8259. The ISR bit is reset at the end of the third INTA pulse.

2.5.2.6 Input/Output. The 8156 (Z7) is a programmable I/O device consisting of three general purpose ports. The CS4 configuration uses Port A and Port B as latched outputs, and Port C as input. Port use is summarized below.

Port A	Output	
PA0	Display data 0	(LSB)
PA1	Display data 1	
PA2	Display data 2	
PA3	Display data 3	
PA4	Display data 4	
PA5	Display data 5	
PA6	Display data 6	
PA7	Display data 7	(MSB)

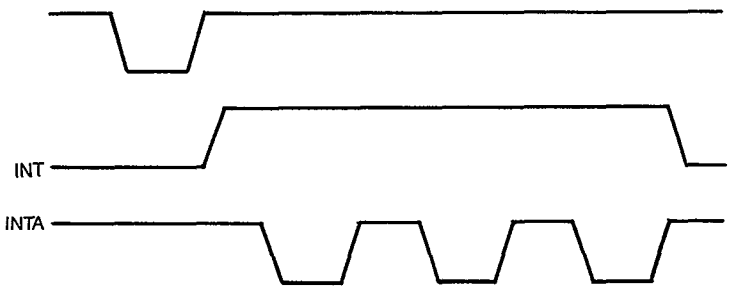

Figure 2-15, Interrupt (Z8) timing

Port B	**Output**
PB0	Display/write control (0 = write)
PB1	Not used
PB2	Not used
PB3	Not used
PB4	Sound generator select/write line (0 = write)
PB5	Not used
PB6	Not used
PB7	Motor control power (0 = enable)
Port C	***(Inputs)***
PC0	Not used
PC1	Not used
PC2	Slew Up Status
PC3	Slew Down Status
PC4	Timer #1 Status
PC5	Timer #2 Status

2.5.2.7 Keyboard scanner. More complex I/O is provided by the 8279 (Z10). (See Figure 2-16.) The device has two sections: keyboard and display. The keyboard portion provides a scanned interface to the membrane front panel contact key matrix. (See Figure 2-17.) The device provides an encoded scan counter output (pins 32–35) which drives a 3-to-8 decoder (Z11). This active low output device grounds, one at a time, the rows of the switch matrix. The columns of the switch matrix are connected to the return lines (pins 1–8, 38, 39).

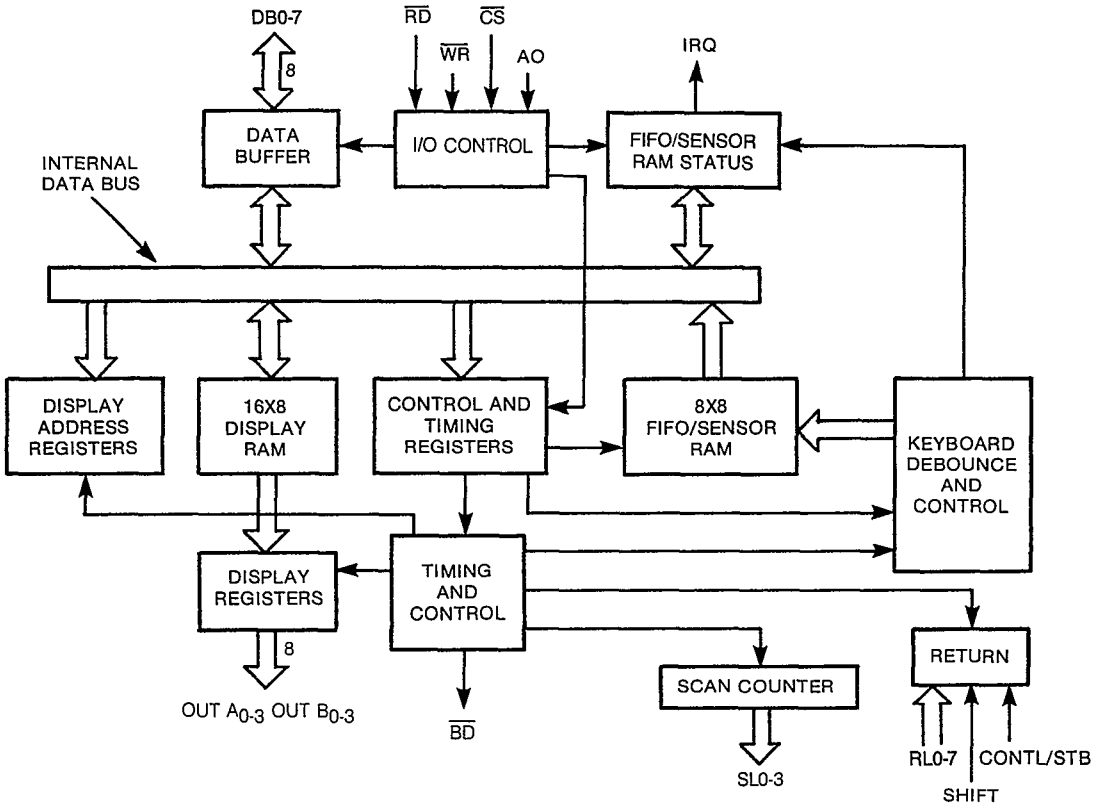

Figure 2-16, 8279 (Z10) block diagram

These lines are scanned, looking for key closures in that row. If the debounce circuit detects a closed switch, it waits approximately 10 ms to check that the switch remains closed. If the switch does remain closed, the address of the switch in the matrix plus the status of the shift and control lines are transferred to an internal memory. The IRQ line is then raised high, interrupting the processor and allowing it to read the switch address from the 8279's memory. This prevents system noise from generating a false keypress.

The display portion of the 8279 provides a 16 x 8 memory and multiplex output control to drive control button status LEDs. The scan counter used to strobe the switch rows is also used to drive the MC14514, 4-to-16 decoder (Z12). This active high device provides control signals to two ULN 2803 sink drivers (Z14 and Z15).

These drivers, one at a time, enable one row of LEDs. Which LEDs of the row are illuminated is controlled by the OUT signals (pins 24–31). These signals are buffered by a UDN-2981 source driver. These signals provide information for one row at a time, and act in synchronization with Z14 and Z15 digit drivers.

The capacity of this LED display system is only partially used in the CS4. The systems total capacity is used in other Haemonetics products which also contain the same CPU board.

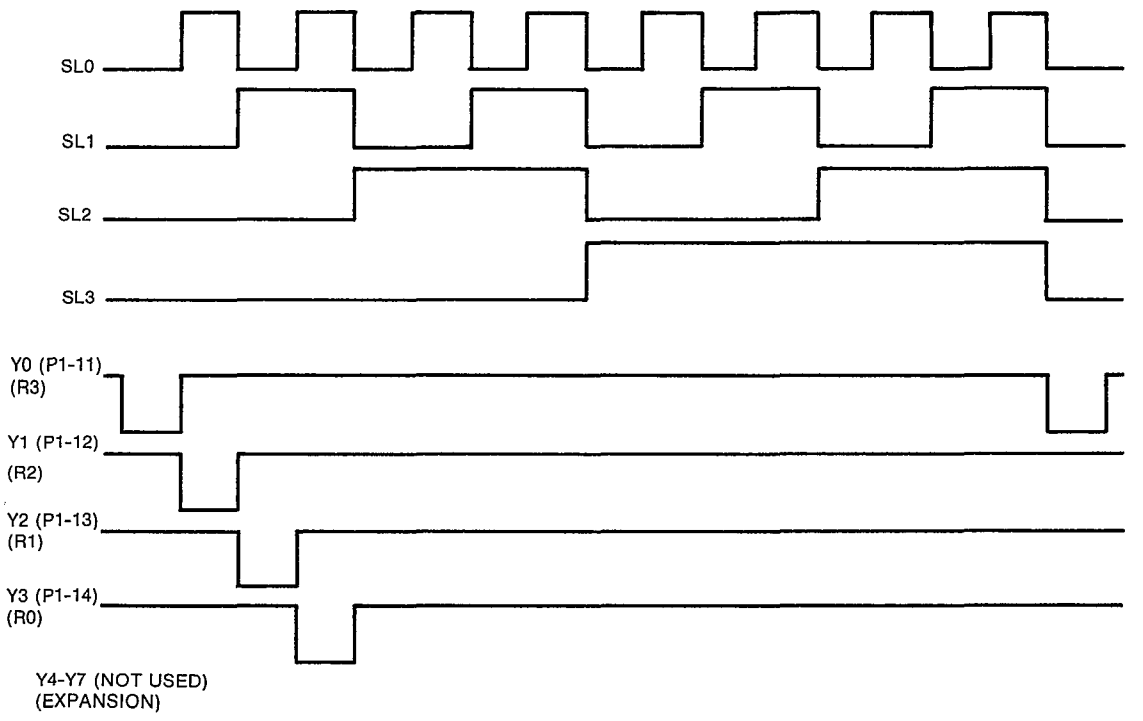

Figure 2-17, 8279 (Z10) keyboard scan timing

2.5.2.8 Expansion bus buffers. In order to provide necessary processor signals to off-board devices, all address, data, and control signals are brought out to connectors. However, to avoid loading down the signals and running the risk of high noise levels, all lines are buffered. Higher order address lines A8–A15 are buffered by the 74LS244 unidirectional driver (Z2). Likewise, processor control signals are buffered by Z5. Address data lines (AD0–AD7) are buffered by the 8286 (Z4) bi-directional buffer. The direction of the buffer is alterable to allow data to flow both in and out of the bus. The direction is outward except when I/OM and RD are low and A15 is high.

2.5.2.9 Status indicators. At the rear of the board are three colored LEDs. Each indicates a separate status signal as follows:

a. Green. +5V power,

b. Yellow. ALE, Address Latch Enable, indicates that the processor is addressing memory or I/O,

c. Red. SOD, Serial Output Data, illumination indicates that the CPU is writing data to the display.

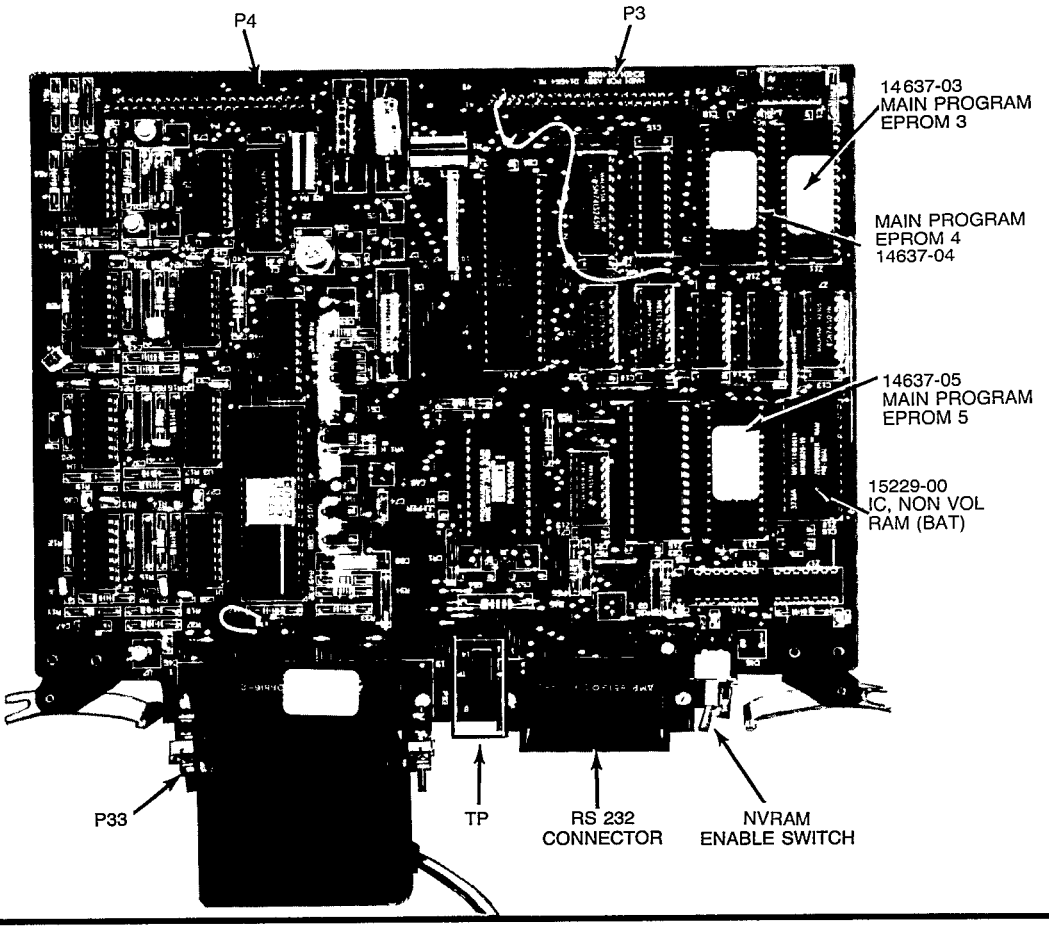

Figure 2-18, Expansion board

2.5.3 Expansion (EXP) printed circuit board (Part no. 13355-00)

The expansion board, shown in Figure 2-18, provides the system with the following elements:

- 3 additional EPROM sockets for program memory
- 2K x 8 non-volatile RAM memory
- 3 programmable I/O ports
- Serial RS232 communications
- 13 bit A to D connector with 8 channel multiplexer
- Bridge input amplifiers

Refer to the block diagram in Figure 2-19.

2.5.3.1 Program memory. The expansion boards adds three EPROMs to the CPU's two EPROMs. The program for the Cell Saver 4 is large enough to occupy all 5 of these EPROMs. On each EPROM is a printed label that references both the individual part number and program revision level. To upgrade to a new program revision, all 5 EPROMs are changed as a set.

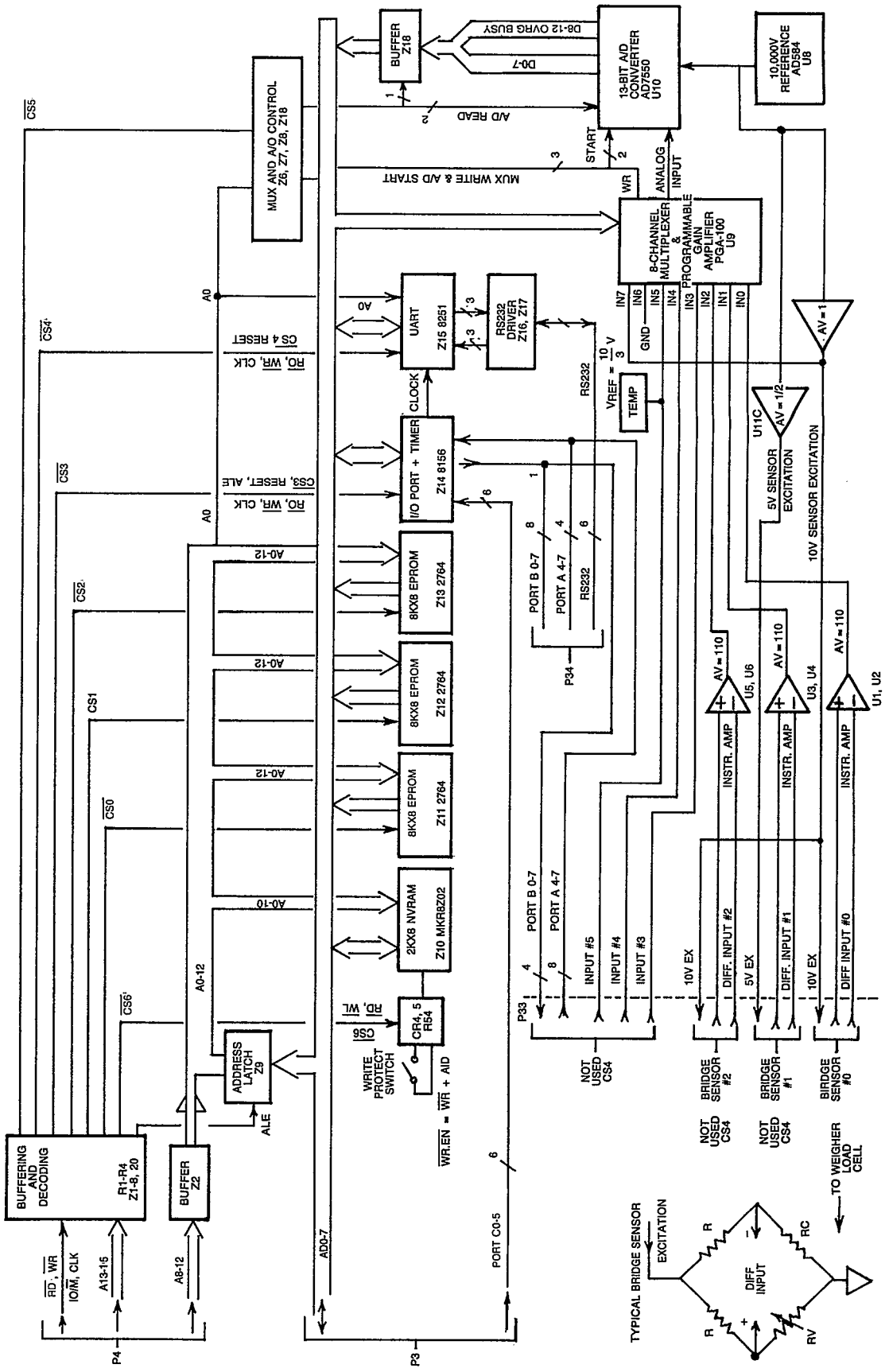

Figure 2-19, Expansion board block diagram

The EPROMs on the expansion board are located at Z11, Z12, and Z13.

Z11 and Z12 are both 2764 EPROM devices which contain 8K bytes of data. Z13 is page addressed by Z14 PB2 and is a 27128 EPROM device. This IC contains 16K bytes of data.

2.5.3.2 Data memory. On the expansion board located at Z10 is a 2K x 8 non-volatile RAM. This non-volatile device is divided into 2 parts. One half of the device is accessible to the computer for reading and writing at all times. This half stores all the program defaults which are modifiable by the user. These include the following:

- Protocol
- Wash volume
- Number of cycles
- Fill speed
- Wash speed
- Empty speed
- Wash mode
- Sound volume
- Sound repetition rate

Also stored is an error log which contains system errors which have previously occurred. These errors include

- Reset 7
- Permanent program valves lost
- Centrifuge sensor fault
- Centrifuge communication error
- Centrifuge speed data error
- Control error
- Cover latch failure
- Self test error
- Memory configuration error
- Battery low error
- Optics low error

These errors are accessible through the automatic diagnostic test which is detailed in the troubleshooting section. It should be noted that one of the possible errors, battery low, refers to the internal battery of the non-volatile RAM. This battery is rated for a minimum life of 10 years. The computer upon power-up examines its status and reports if its voltage has dropped to an unacceptable value.

The second half of the non-volatile RAM is write protected. A switch on the expansion board must be moved before the computer can write new data into this portion. This half is mainly used for storing calibration number and checksums of the EPROMs. Upon turn-on the computer computes the check-sum of the EPROMs and compares the value to that stored in the write-protected NVRAM. If a mismatch should occur it is stored in the error log and the operator notified. Details on use of this write protected memory block are found in Chapter 4, Software diagnostics.

2.5.3.3 I/O device 8156 . The expansion board also provides three additional ports for Digital I/O. This is implemented by use of am 8156, programmable I/O device, located at Z14. Details of this device including block diagrams can be found in Chapter 2, Theory of Operation - CPU board. This device contains a 256 x 8 RAM which is not addressed or utilized in this design. Only one bit of the 8156 output posts is used in the Cell Saver 4. This bit PB_2, pin 31 is used to page address EPROM Z13. The processor can access the "lower half" of Z13 by placing a logic low at PB_2. When the "upper half" is required, a logic high is placed at PB_2 and supplied to the MSB of the EPROM's address input. Z11 and Z12 also could be page addressed by PB_0 and PB_1, however, the CS4 program is not yet large enough to require this.The timer section of the 8156 is utilized to divide the system clock down to be used as the transmit and receive clock in the 8251A serial communication controller.

2.5.3.4 Serial communications controller 8251A. R5232 communications is implemented by use of a 8251A serial communications controller, Z15. This device uses drivers MC1488, Z16 and MC1489A, Z17 to communicate via P34 a D shell 26 pin connector located in the rear of the expansion board. Serial communication via this connector is carried out at 300 baud with 7 data bits, even parity, 1 stop bit, and 1 start bit.

2.5.3.5 A-to-D converter, 13-bit. High resolution A to D conversion is carried out on the expansion board. An AD7550 13 bit A to D converter, U10 is the heart of this system. This CMOS device utilizes quad-slope integration to achieve outstanding accuracy and stability (1ppm/°C). The device outputs its data through a 74LS244 buffer, Z18, to the main CPU data bus.

The analog input to the A to D converter is driven by a programmable gain amplifier, PGA 100 AG, U9, This device allows the computer to select any one of its 8 analog inputs and set that signal to have a gain of 1 to 128.

To perform an A to D conversion the following steps are required:

Step 1. Write to Location 8 A 0 0 to select multiplexer channel and programmable gain. The format of the 8 bit word is shown below.

0 A A A 0 G G G

A A A	MUX Address	Input
0 0 0	0	Waste Bag Weigher
0 0 1	1	Not used in the CS4
0 1 0	2	Not used in the CS4
0 1 1	3	Not used in the CS4
1 0 0	4	Not used in the CS4
1 0 1	5	Board temperature
1 1 0	6	Analog ground
1 1 1	7	Reference voltage

G G G	Gain Select	Gain
0 0 0	0	1
0 0 1	1	2
0 1 0	2	4
0 1 1	3	8
1 0 0	4	16
1 0 1	5	32
1 1 0	6	64
1 1 1	7	128

Step 2. Write to location 8A01. The data word written can be any value; this process simply starts the A-to-D conversion. Conversion is completed approximately 40 ms after this write is completed.

To read data from the converter, two separate processor reads must be completed:

Step 1. Read location 8A00, LSB data

Step 2. Read location 8A01, MSB data and status O_vB_s, 1, D12, D11, D10, D9, D8

O_v = 1 = over range
O_v = 0 = in range
Bs = 1 = busy
Bs = 0 = complete

Note: D12 through D0 are coded in 2's compliment

0 F F F = + full scale
1 0 0 0 = - full scale
0 0 0 1 = + 1
1 F F F = - 1
0 0 0 0 = 0

2.5.3.6 Bridge input amplifiers. The expansion board contains three independent bridge amplifier circuits and excitation sources for energizing them at either +5 or +10 volts. On the CS4 only one channel is used, channel 0. This instrumentation amplifier configuration is connected to the PGA device discussed previously. This single channel is utilized to sense the weight of the waste bag. The sensor used to detect the weight is a classical load cell configuration that is energized at 10 volts by the expansion board.

2.5.4 Input/Output (I/O) printed circuit board (Part no. 13102-00). (See Figure 2-20.)
The I/O pcb contains system I/O, including output latches with indicators, pump motor digital-to-analog (D/A) convertors, modulated optics control, 8-bit A/D convertor with MUX, sound generator, centrifuge microcomputer control, device decoding logic and signal transfer. A functional block diagram of the I/O pcb is provided as Figure 2-21.

2.5.4.1 Output latches. The I/O board has the capacity for 16 independent computer controlled logic output signals This capacity is controlled by the use of two DP8311 (Z2 and Z3) output latches. The outputs of Z2 and Z3 are routed to the driver board through the 34-pin ribbon connector (P30) located at the rear of the board. The status of these output signals is easily monitored by the use of the LED indicators mounted directly above the connector, P30. The output usage of Z2 and Z3 in the CS 4 is listed in Table 2-5.

Table 2-5
Output latches

Z2–6	P30–20	Not used
Z2–7	P30–22	Not used
Z2–8	P30–24	Not used
Z2–9	P30–26	Not used

Table 2-5 (Cont)
Output latches

Z2–11	P30–28	Not used
Z2–12	P30–30	Not used
Z2–13	P30–32	Pump enable control
Z2–14	P30–34	Pump reverse control
Z3–6	P30–4	Wash clamp valve
Z3–7	P30–5	EMPTY clamp valve
Z3–8	P30–8	FILL clamp valve
Z3–9	P30–10	Centrifuge interlock control value
Z3–11	P30–12	Not used
Z3–12	P30–14	Centrifuge interlock enable control value
Z2–13	P30–16	Not used
Z2–14	P30–18	Not used

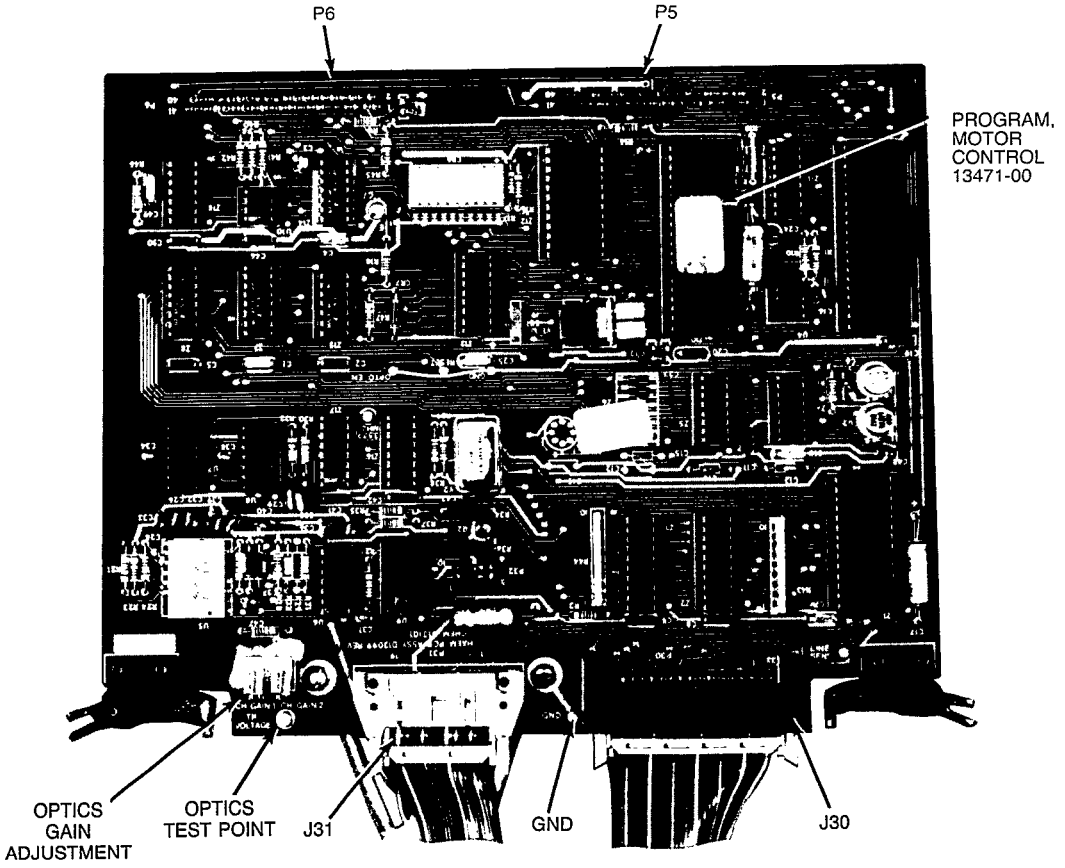

Figure 2-20, Input/Output (I/O) board

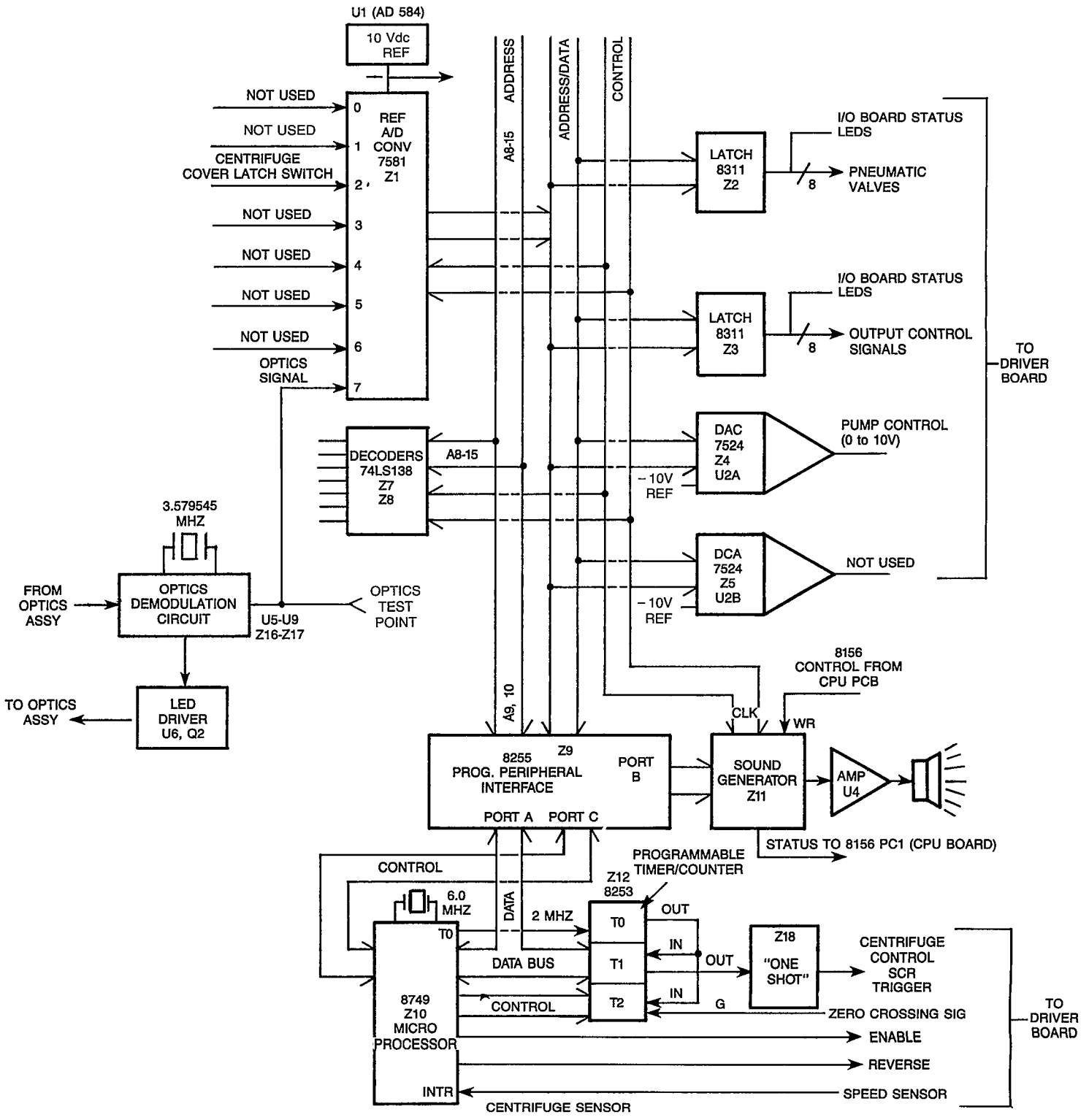

Figure 2-21, I/O block diagram

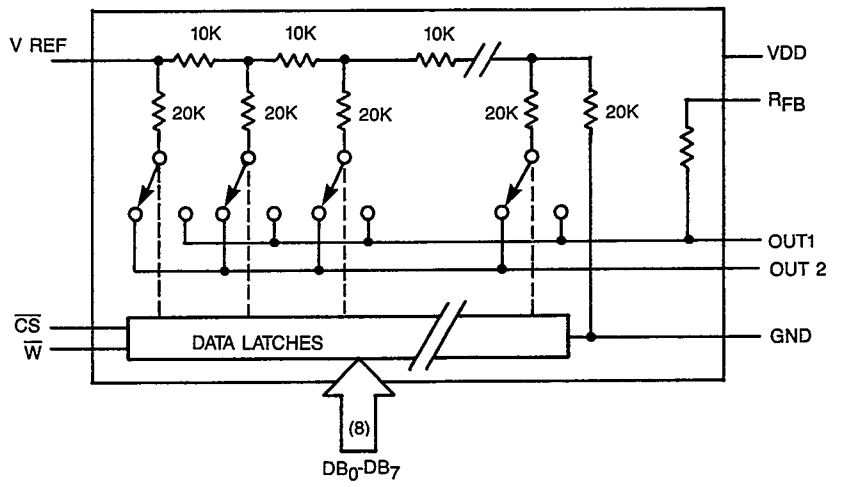

Figure 2-22, AD 7524 DAC (Z4) block diagram

2.5.4.2 Pump motor digital-to-analog (D/A) convertors. The I/O board has the capacity to drive three pump motors independently under computer control. This is accomplished by the use of three D/A convertors Z4, Z5, and Z6 coupled to buffer amps, U2A, U2B, and U3. The Cell Saver 4, however, uses only one pump motor and associated circuits Z4 and U2A.

Control of pump speed is accomplished by turning an 8-bit digital word into a proportional voltage. This voltage is then fed off-board via P30 to the pump motor analog drive circuit on the driver board.

The initial D/A conversion is performed by Z4. (See Figure 2-22.) The computer has only to "write" an 8-bit word to the 7524 circuit. It latches the data and applies the 8-bit "word" to a series of switches. These switches control the flow of current through the resistor network, which is of the inverted R-2R ladder type. These binary scaled currents, OUT 1 and OUT 2, are applied to the AD642 buffer amplifiers. These devices convert the current to proportional voltage.

The relationship of this voltage to the digital input is shown in Figure 2-23. The voltage reference from the AD584 (U1) is –10 volts. This device provides a –10 volt level at pin 15 of the 7524 convertor. Using the conversion table of Figure 2-23, we observe that the computer can output voltages from 0 to +9.96 volts. The division of this range is 256 discrete steps with an incremental value of approximately 0.039V or 39 mv.

2.5.4.3 A/D convertor with multiplexer. Z1 on the I/O board is an AD7581 8-channel, 8-bit A-to-D converter. Refer to Figure 2-24. This monolithic device contains an 8-bit converter, an 8-channel multiplexer, 8

MSB LSB	
||||||||	$-V_{REF}\ \frac{255}{256}$
10000000	$-V_{REF}\ \frac{128}{256} = \frac{-V_{REF}}{2}$
00000000	$-V_{REF}\ \frac{0}{256} = 0$

NOTE: 1 LSB = $(2^{-8})\ (V_{REF}) = \frac{1}{256}\ (V_{REF})$

Figure 2-23, D/A conversion table

x 8 dual port RAM, 3-state data drivers, address latches, and microprocessor-compatible control logic. The successive approximation conversion takes place on a continuous channel sequencing basis, using microprocessor control signals for the clock. Data is automatically transferred to its proper location in the 8 x 8 dual port RAM at the end of each conversion. A Read Data operation from the microprocessor is allowed at any time for any channel since on-chip logic provides interleaved DMA. The channel address (A0–A2) is latched into the device by the ALE signal (pin 16). This ALE signal is also provided to the clock input (pin 15) to drive the A/D conversion process. Eighty clock pulses are required per channel with a complete scan through all channels requiring 640 clock periods. Grounding the B_{OFS} input signal (pin 1), applying a –10 volt reference to the V_{REF} input (pin 10) sets the device to operate with an input range of 0 to 10 volts. The –10 volt reference is provided by an AD584 (U1).

On the Cell Saver 4 only two of the 7581's inputs are used. One of these inputs is used as a digital port to sense the position and status of the centrifuge cover and its latch. Channel 2 derives its signal from the cover latch switch. When the cover is not latched closed, the signal is pulled to +5 volts. If the cover is closed and the latching mechanism is activated and holding the cover in place, Channel 2's signal is grounded.

The second channel used in the Cell Saver 4 is channel 7. This signal is derived from the optics sensor and exhibits values over the nearly entire 0 to 10 volt range of the converter. The computer accepts the digital value of this optical sensor and uses the data to initialize and control the FILL and WASH mode.

2.5.4.4 Sound generator. A wide variety of complex sounds can be generated under computer control by this assembly. This is accomplished

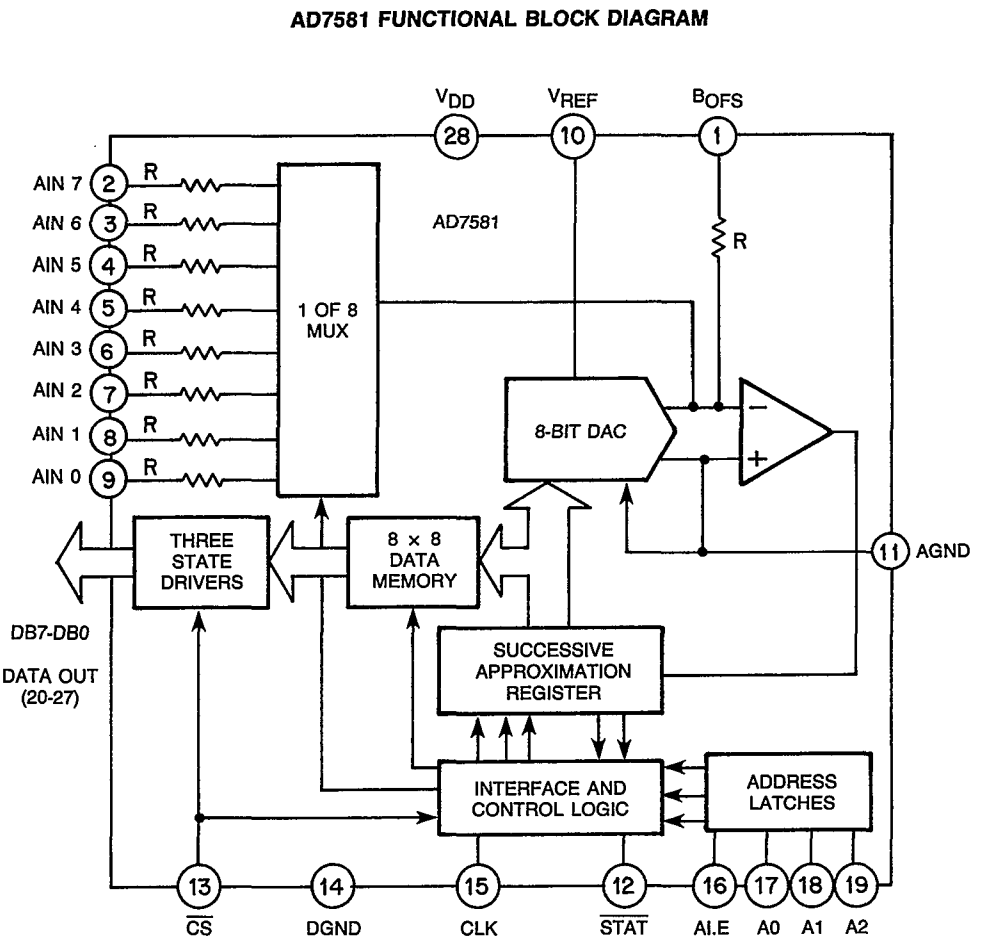

Figure 2-24, A-to-D block diagram

by use of the 76489 (Z11) programmable sound generator. (See Figure 2-25.) Three separate frequencies can be simultaneously generated and mixed with varying attenuation levels. All this is done by transmission of digital codes from the main CPU. The transmission "gate" is Port B of the 8255 (Z9). Synchronization and control of this data transfer is provided by the ready, write (WR), and clock (CLK) lines.

The clock signal is the constant 2 MHz clock frequency provided by the main CPU. This is used for clocking of control registers and the source from which the audio frequencies are derived. The write signal is provided to initiate the input of data from Port B into the latches of the 76489. Transfer begins when the write line is brought low. (See Figure 2-26.) Once the data transfer is initiated, approximately 32 clock cycles must pass before the input data can be changed. The CPU can sense if the data transfer is completed by examining the status of the ready signal from the 76489. This signal is normally high, and is pulled low by the 76489

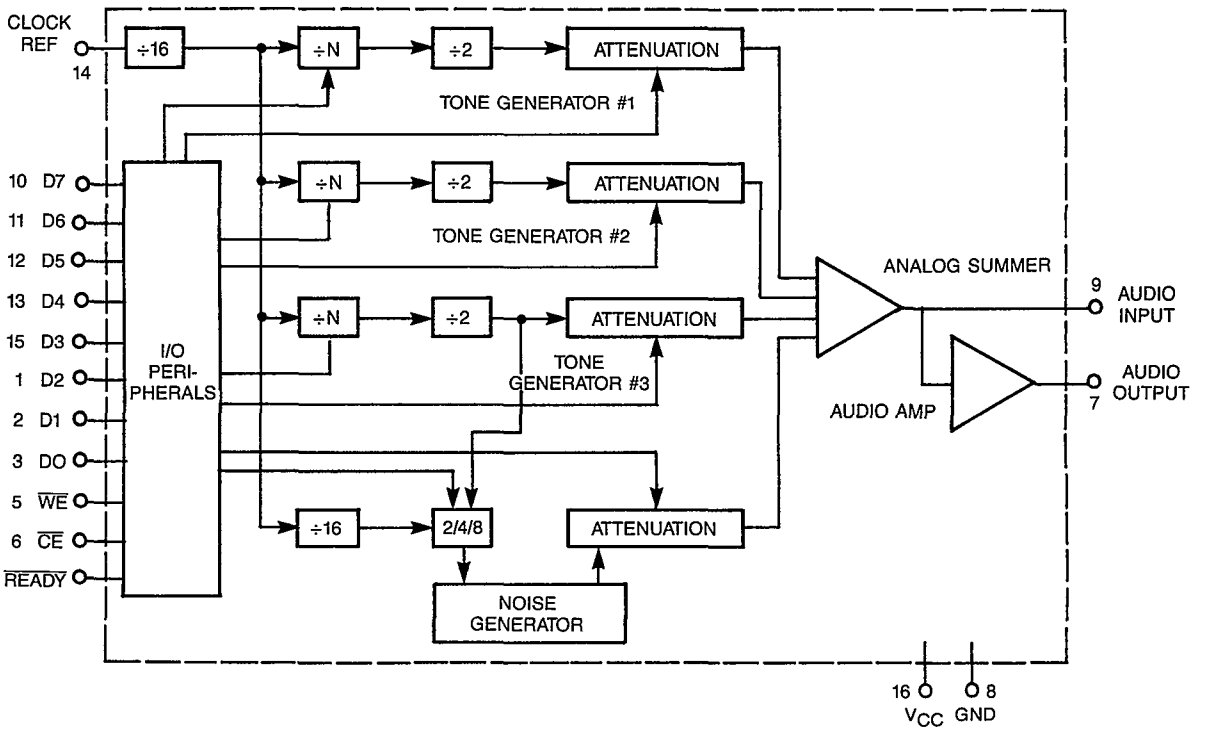

Figure 2-25, 76489 (Z11) programmable sound generator block diagram

after the write pulse goes low. The ready signal returns high after the data transfer is completed, and indicates further data transfer can be initiated.

The ready line output is configured as an open collector. Therefore, resistor R11 (10K) is required to allow the ready signal to switch from logic low to high. Without this resistor, the ready signal would remain in the logic low condition regardless of the state of the sound generator.

After the audio frequency is generated by the 76489, it is amplified by an LM386 audio amplifier (U4). this amplifier is AC coupled on both input and output, and provides a high level signal to P30, the 34-pin ribbon connector. This signal passes through the driver board and is eventually applied to the 8-ohm speaker mounted on the cabinet. The sound level is set by the resistor divider network comprised of R10 and R12. The smaller the value of R10 the lower is the sound level produced by the speaker.

2.5.4.5 Device decoding logic. Two 74LS138's (Z7 and Z8) generate the chip select signals for the I/O board. Z7 provides memory mapping for the A/D converter Z1 and the 8255 (Z9). Refer to Table 2-3 for a listing of the memory map. Z8 provided I/O mapping for the remaining devices on this board. Refer to Table 2-4 for a listing of the I/O map.

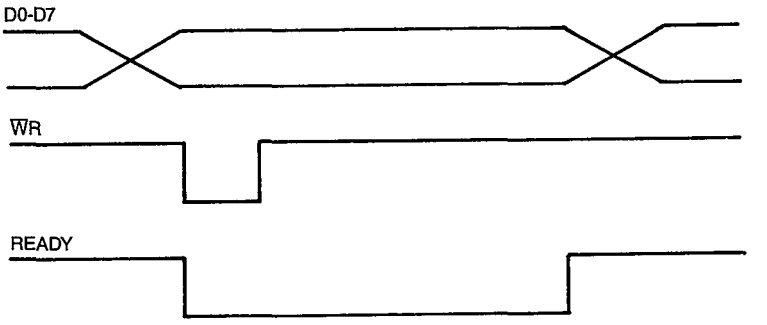

Figure 2-26, 76489 (Z11) data transfer timing

2.5.4.6 Signal transfer. The I/O board receives signals from the driver board. In some cases, it modifies these signals and transfers them to the CPU board for processing.

a. Centrifuge Cover Switch. The CS4 contains a sensor which indicates when the centrifuge cover is both closed and locked in position. This indicator is used to prevent operation of the centrifuge with the cover either raised or unlocked. The operator is therefore protected from accidently coming in contact with a spinning centrifuge. (See Figure 2-27 for the cover switch flowchart.)

b. Pump Counter (Hall Effect Device). This system a magnetic Hall Effect Device pump counter. The counter signal is simply transferred from the driver board to the interrupt RST 7.5 on the CPU pcb for processing. (See Figure 2-28 for the pump counter flowchart.) It is also applied to the SID input of the CPU allowing sampling for signal debouncing.

c. Air Detector. The CS4 uses a self-contained ultrasonic air detector in sensing fluid status. This detector is provided with +15 volts of power from the system, and returns a TTL (Transistor-Transistor Logic) status signal. The I/O board receives this signal and modifies it to give a pulse train whenever air is detected. (See Figure 2-29 for the air detector flowchart, and Figure 2-30 for air detector timing.)

2.5.4.7 Bowl optics. The bowl optics consist of a combination of optical and electronic systems which are used to determine when a specified level of red cells has been reached in the spinning bowl. The optical system uses a single lens and beam splitter. Refer to Figure 2-31. The LED light travels through the beam splitter and is focused by the lens on the white inner core of the centrifuge bowl. The core reflects the light back through

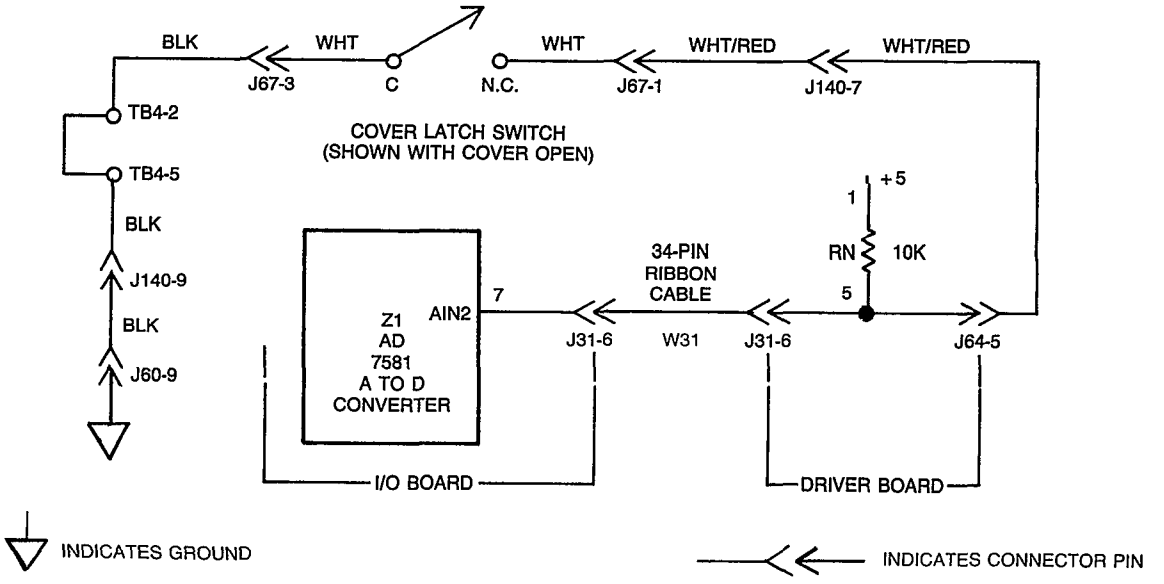

Figure 2-27, Cover switch flowchart

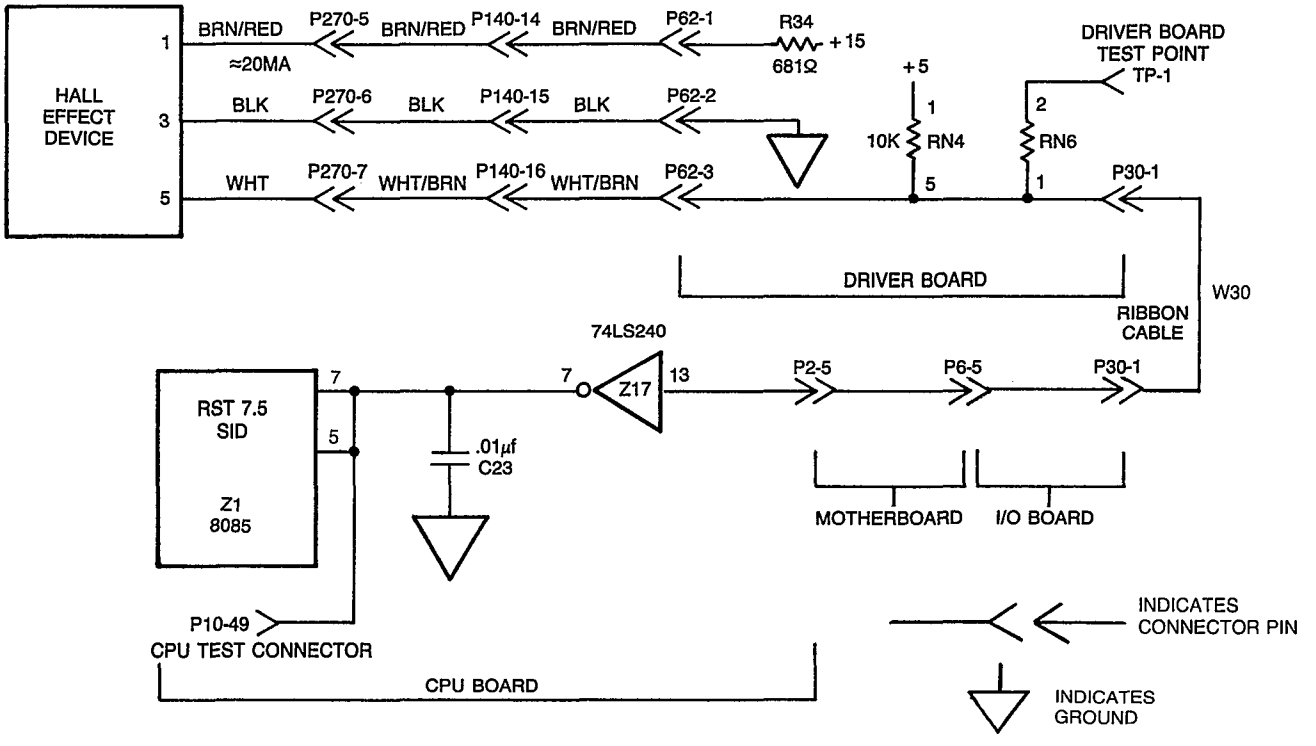

Figure 2-28, Pump counter flowchart

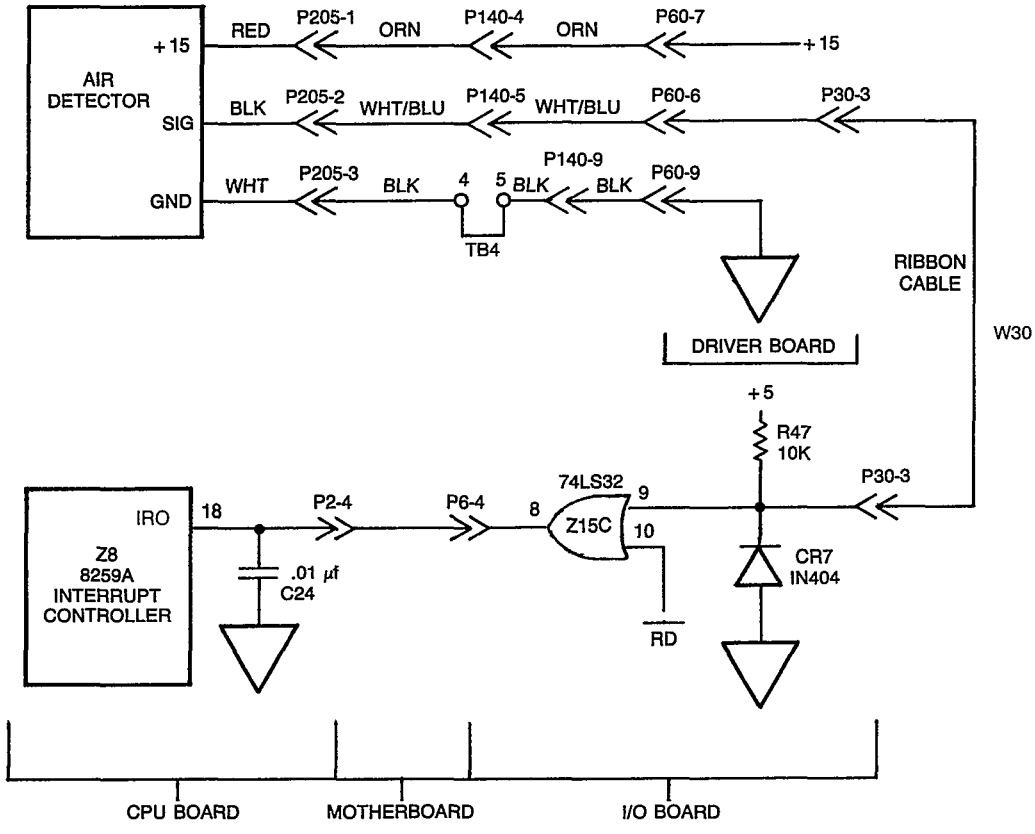

Figure 2-29, Air detector flowchart

the blood in the bowl and the clear outer bowl shell. This light is collected by the lens and directed to the beam splitter where it is deflected down onto a high speed photodetector. The total transmission (from transmitter to receiver) is therefore a function of the lens system, bowl characteristics, and the blood sample. Since the transmission characteristics of the optics and bowl are generally consistent, transmission is a variable function of the fluid in the bowl as shown in Figure 2-32.

Operation. (See Figures 2-33 and 2-34.) A modulation technique is used to overcome the effects of ambient lighting. An LED light source is modulated at a fixed frequency and amplitude. The modulated light is then transmitted to the bowl via the lens. The receiver picks up the light reflected from the bowl plus light reflected from ambient sources. The light is then converted into an electric signal by a high-speed photodetector.

Since the frequency of the modulated light is known, an amplitude demodulation technique may be implemented on this signal in a manner similar to the working of an AM radio receiver. The amplitude of the received modulated light is the transmission loss of the light source in the optical system. Since the light source is constant and the optical char-

DETECTOR STATUS	DETECTOR OUTPUT	I/O PCB Z15-8	CPU PCB Z8-18
AIR	0		
FLUID	1	1	1

Figure 2-30, Air detector timing

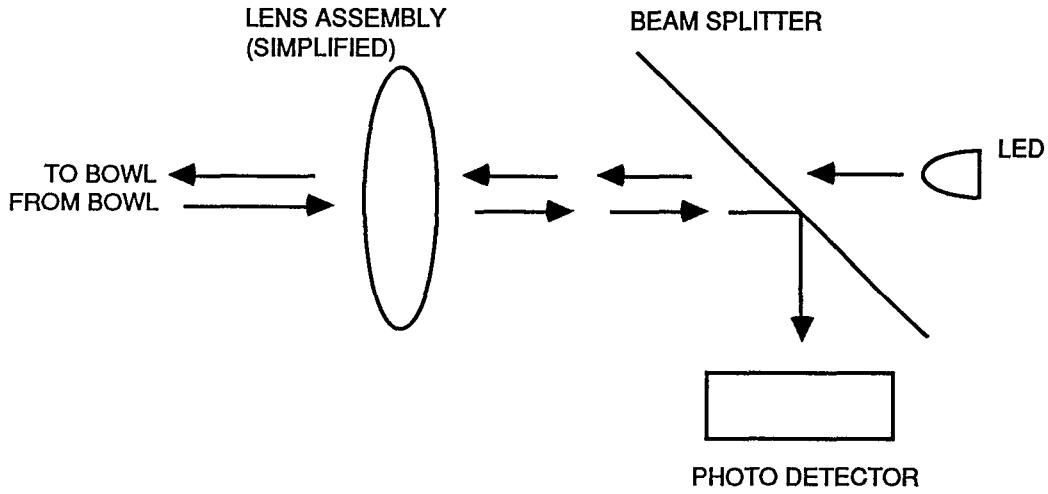

Figure 2-31, Bowl optics block diagram

acteristics of the lenses, and bowls are constant, the receiver modulated amplitude is essentially the optical transmission characteristics of the contents of the bowl (i.e., red cells, plasma, air, water, etc.).

This received amplitude is converted into a dc voltage signal, which is proportional to the modulated light received. The DC signal is then analyzed to produce the "Optics Trip" signal. The trip is considered to be the point at which the red cells block much of the modulated light reflected from the core of the bowl (as determined by the lower voltage of the optics signal) due to the shape and density of the cell structure.

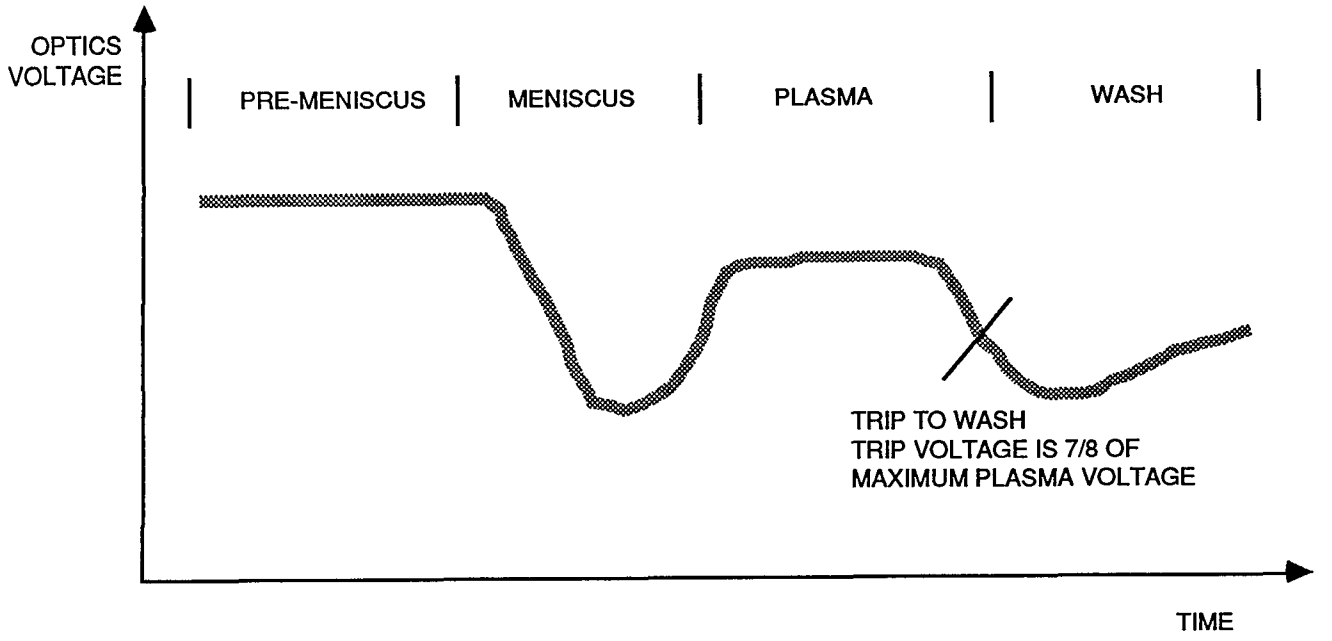

Figure 2-32, Bowl transmission characteristics

The three systems, optical, electrical, and mechanical, that make up the modulated optics are summarized below.

a. Optical System. The function of the optical system is to detect red cells. The lens of the optical system is aimed at a specific point on the shoulder of the bowl and at a specific area on the core. The point chosen on the shoulder of the bowl dictates the volume of red cells in the bowl required for the trip.

The color (wavelength) of the modulated light is red. Since the fluid is translucent, lacking sufficient optical density to block the light, light is reflected from the core. The red cells tend to block most light transmitted because of the high hemoglobin concentration and because the red cell geometry causes most light to be diffused by a lens effect. Plasma, PRP, and platelet concentrate lack sufficient optical density to be confused with red cells.

Note: Reflection here indicates a scattered reflection as light seen on a white surface, and is not to be confused with the type of light reflected from a mirror.

b. Electronic System. The electronic system provides an accurate and consistent means of generating the modulated light source, amplifying the received signal, and initiating a trip at the proper optical density, while

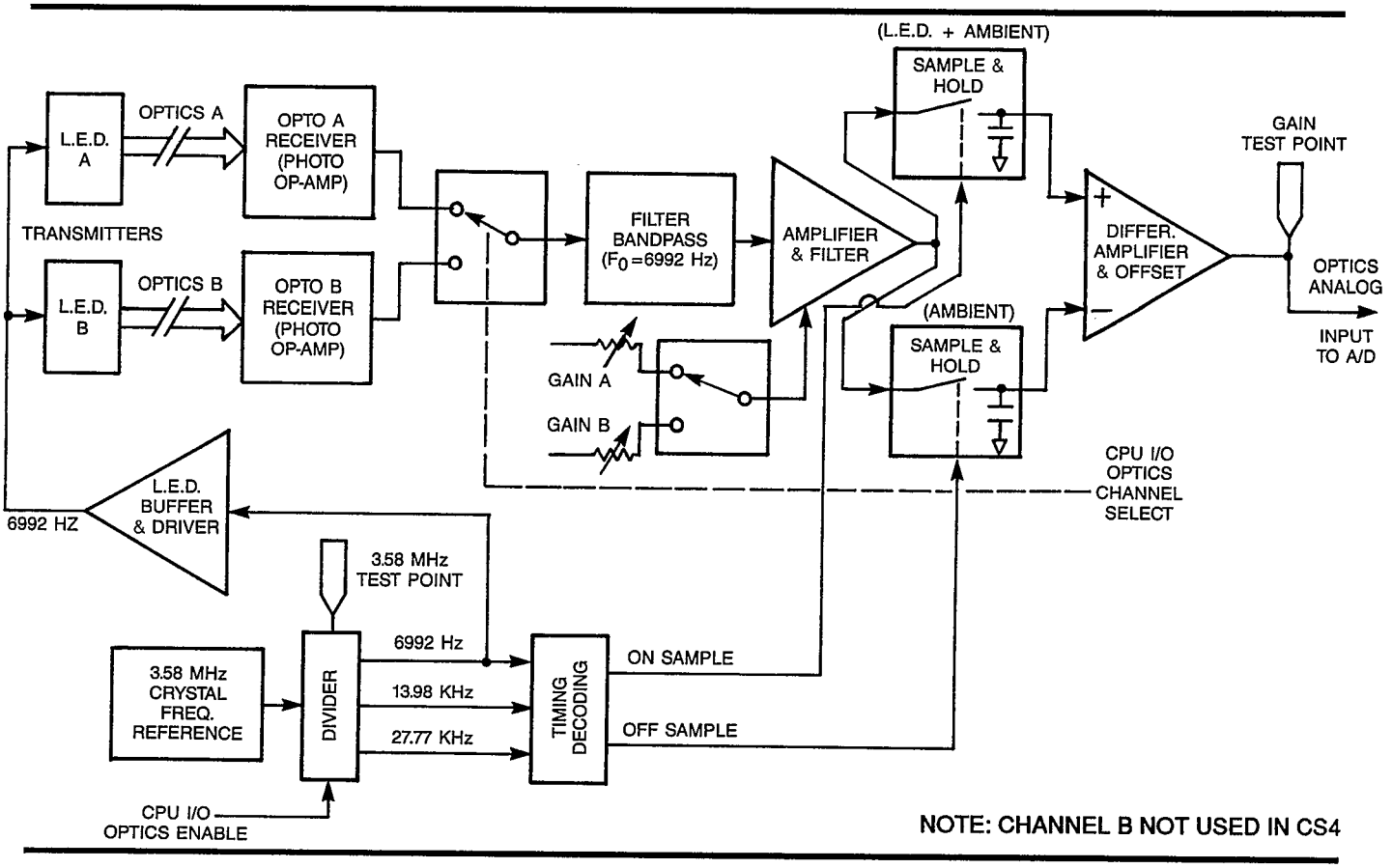

Figure 2-33, Bowl optics block diagram

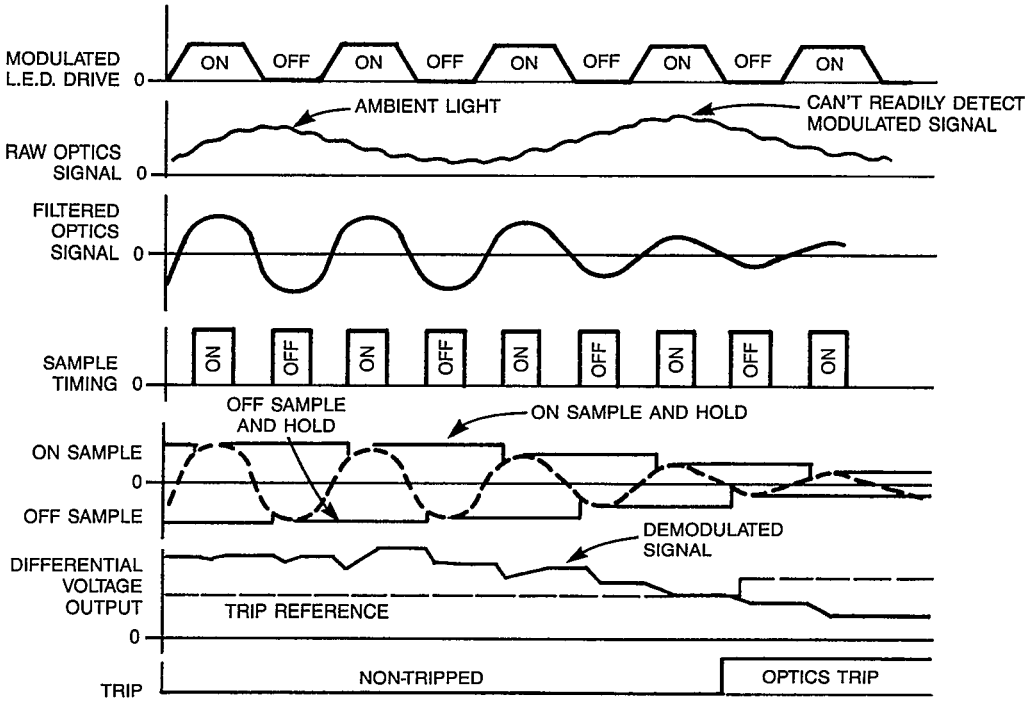

Figure 2-34, Bowl optics waveforms

maintaining the flexibility to compensate for varying protocol and optical constraints.

A high intensity red Light Emitting Diode (LED) is used as the light source. The LED has a stable aging characteristic that should vary only slightly over time. The LED also has the capability of being turned on and off rapidly (modulated), and the buffer for the LED will drive the device in a constant current mode for maximum stability.

The frequency of the modulation is controlled by a crystal frequency reference to ensure stability. The frequency of 6992 Hz (cycles per second) is not too close to the harmonics of 50 and 60 Hz, at which ambient lights (i.e., fluorescent lights) flicker. Otherwise the ambient light flicker might be confused with the actual modulated light. A crystal frequency reference of 3.58 MHz is divided into 28 KHz, 14 KHz, and 6.992 KHz. The combination of the three frequencies may be digitally decoded to provide timing for the synchronous demodulator circuit.

The optical sensor is a hybrid circuit containing a PIN diode and FET op-amp. The PIN diode produces current that is directly proportional to the light (photons) that strike its surface. Furthermore, the characteristics are stable and repeatable, and the device has fast frequency response. The FET op-amp and gain resistor then change the current produced into a voltage that is directly proportional to the received light.

The optic signal must then be conditioned and demodulated. This signal first goes to a bandpass filter that attenuates all frequencies except the 6992 Hz modulation frequency. This signal may then be amplified to a useable level. (The maximum received modulated light is often 1/10,000 of ambient light.) A further gain stage is added, which allows for some amplitude adjustment by the gain potentiometer. The signal is now an approximately 6992 Hz sine wave with some ripple on it from ambient light source effects.

The signal is then synchronously demodulated using the timing from the frequency divider and decoder logic described earlier. Demodulation is accomplished by using two sample and hold circuits to sample the peak of the sine wave. (The peak is the result of the LED light, plus ambient light.) Other timing causes the other sample and hold to sample the valley of the sine wave signal. (The valley is caused by the LED being off, and therefore, represents only ambient light effects.)

Both these signals feed into a differential amplifier. This amplifier senses the difference between these two signals, which consists of the modulated signal, plus the ambient effect, minus the ambient effect, yielding only the modulated amplitude. This, together with some minor filtering in the differential stage, yields a dc signal proportional to the received modulated signal.

With no light being received, the optical signal should be zero volts. With a clear spinning bowl in the system, the bowl optics reading should be 10.5V ±1.5V. The amplitude of this full-scale reading should be adjusted at the gain potentiometer (see the Bowl Optics Service Procedure in Chapter 4). This voltage is available at the back edge of the I/O board, and is referenced with respect to the "Analog Ground Test Point," also on the back of the board. This analog signal is input to the A/D convertor to be analyzed by the computer program.

c. Mechanical. In order for the light signal to be transmitted clearly and to the correct level on the bowl core, the various mechanical settings of the Bowl Optics must be accurate. Naturally, the lens must be clean so that the light may be accurately transmitted and received. The lens must also be positioned at the correct angle on the well rim. The optics aiming and gain tests in Chapter 5 explain how to check the mechanical position.

System implementation. The following discussion explains the timing of the CS4 modulated optics as shown in Figure 2-35.

a. Transmitter:

Oscillator. The frequency reference, Y2, is a 3.58 MHz hybrid oscillator circuit (K1100) in a standard 14 DIP package with four leads. C43 decouples this device from the +5 Vdc power supply. R38 is a 2K pull-up resistor required to interface the TTL output of pin 8 to the CMOS input of the divider.

Divider. The frequency divider, Z16, is a CD4060 CMOS binary counter/divider. The 3.58 MHz is input to the device on pin 11, and is available at pin 9 as the 3.58 MHz test point. (Warning: examination of this point by a scope or frequency counter, will also load down the rest of the circuit.) This circuit provides three outputs: Q7, Q8, and Q9 for the decoder circuit. The outputs divide the reference by 128, 256, and 512 to yield 28 KHz, 14 KHz, and 6992 Hz, respectively. The 6992 Hz output is also used for the LED drive signal.

Pin 12 of the device is the counter reset. There is a jumper on this line which connects the input directly to ground which keeps the divider and LEDs enabled.

Decoder. The decoder, Z17, is a 3-to-10 line decoder (74C42) with inverted outputs. The A, B, C, and D inputs are connected to outputs Z16, Q7, Q8, Q9, and ground. The #4 and #6 decoded outputs represent the

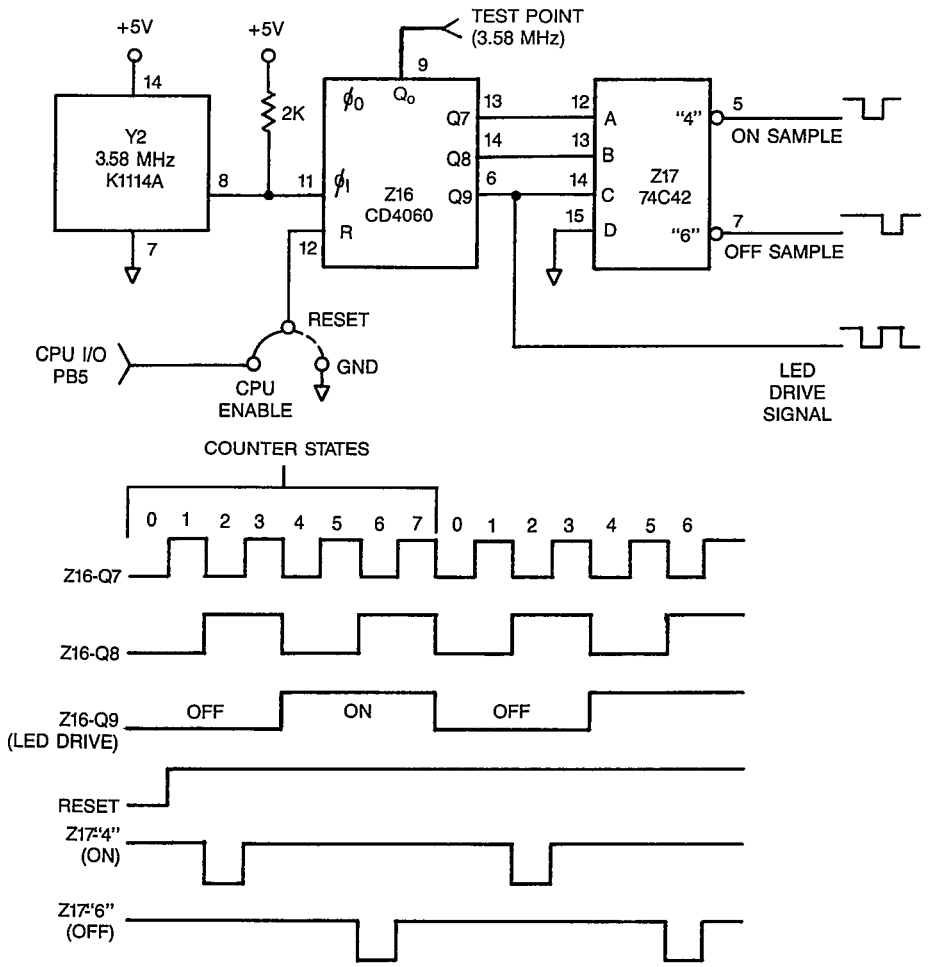

Figure 2-35, Optics frequency standard and logic timing

binary two and six states from the divider. These outputs are then used to strobe the sample, and hold circuits (on-sample and off-sample).

LED Driver. The LED driver is a constant current driver circuit used to drive the LED light source in the optics assembly. The input to the circuit is CMOS output from Z16-Q9. The logic output transitions from 0.0 volts to 5.0 volts consistently, and can therefore be an analog reference.

The circuit consists of 1/4 of the high speed LM349 (U6C) op-amp package, Q2 transistor buffer, R34 and C44 supply decoupler, and the R36 current control resistor. The op-amp will drive the output so that the inverting input (pin 6) is at the same voltage as the non-inverting input (pin 5), which is the input reference. Thus the voltage across R36 will shift between 0 and 5.0 volts at 50% duty cycle, and the current through the resistor will vary between 0 ma and 50.0 ma (5.0 V/100 ohms). The current in this resistor is also the current through the LED in the optics assembly. Since the op-amp cannot source 50 ma, the 2N2225A (Q2) tran-

sistor is added as a current amplifier. R34 and C44 isolate this circuit from the analog +15 volt supply, since the current pulses would generate synchronous noise to the demodulator circuit.

b. Synchronous demodulator

Opto Sensors. The opto sensor, U1, is located in the optics assembly. This device is a UDT-455 photo op-amp. The UDT-455 is a hybrid combination of a photo-sensitive PIN diode and a high input impedance FET op-amp. The current generated by the PIN diode is directly proportional to the number of photons (light intensity) striking its surface.

The op-amp drives the output so as to balance the inverting input with the non-inverting input which is ground. The inputs are very high impedance and thus allow negligible current input. As a result, the total current generated by the PIN diode flows through the gain resistor R1 (or R2). Since the inverting input is nearly ground, the output of the op-amp will be the PIN diode current times the resistance value (V=I*R). This voltage is therefore directly proportional to the received light. C1 (or C4) is added across the gain resistor to form a lag filter to suppress noise generated by the PIN diode. C2 and C3 provide decoupling of the +15 volt and –15 volt supplies required to run the op-amps. The power, ground, optic voltage signal, and the LED drive signal gets connected to the optic interface board via the P32 connector.

Channel Selector. The CPU has the capability to select between the optics channels by controlling an analog switch. The switch, U9 (HI-201), is a quad analog switch with inverting inputs. A low on the input causes the switch to be turned ON giving a low impedance between the output and the input. The CPU generates two I/O command lines to select the channels. Two switches are connected to each control line. The first switch selects which photo detector is connected to the demodulator circuit, and the second switch selects which gain control potentiometer effects the circuits again. The CPU then has the capability to select either channel, no channel, or both channels (an illegal combination). The Cell Saver 4 uses only Channel 1.

Bandpass Filter. The bandpass filter is used to filter out the ambient lighting effects. A hybrid filter circuit, U5A (AF100), is configured as a bandpass filter. The center frequency is controlled by R21 and R22 which are 7.15K resistors. The hybrid device contains precision capacitors yielding a pass frequency of 6992 Hz accurate to better than 2%. The input from the sensor is first ac coupled by C47 to remove the dc ambient lighting effect. R19 and R20 control the Q factor of the filter. The Q factor controls the off frequency attenuation which is kept relatively low to

avoid drastic phase shifts for the synchronous demodulator due to slight frequency shifts. The AF100 filter also has a spare op-amp (U5B) which has a fixed gain and is used to buffer and amplify the filtered output. The gain is controlled by the R24 and R23 ratio which is 20:1. The actual gain of the device is slightly less than 20 since the frequency characteristics of the device are non-ideal. C28 is added across R24 to filter out noise the amplifier picks up from other sources.

Gain Stage Circuit. The gain stage is the circuit centered on the U6A op-amp used in the non-inverting mode. The signal is ac coupled from the AF100 output by C29 to remove the amplified dc offset generated by the previous gain stage. The gain of this stage is the ratio of R27 to the gain potentiometer, R25 or R26, whichever is selected by the analog switch. The gain of this stage may be varied from 20 to about 200. C28 is added across R24 to create a filter that attenuates noise picked up in the circuits.

Sample and Hold Circuits. The sample and hold circuits sample the peaks and valleys of the filtered optics signal. The filtering removes the 50/60 Hz ac ripple generated by ambient light sources that the bandpass filter cannot totally remove. The timing for this sampling comes from the decoder logic mentioned earlier. The LED timing requires that it be on for states 0, 1, 2, and 3; and off for states 4, 5, 6, and 7. The sampling occurs at states 2 and 6, which are about the peak and valley of the modulated signal.

The only removed signal should be that of the modulated signal and any synchronous noise detected. The synchronous noise is generated by the transmitter circuit, and is an erroneous signal. However this signal is transmitted mostly by EMI as a radiated signal, and as a result, is orthogonal to the actual modulated signal (90 degree phase shift). Thus when the synchronous demodulation occurs on the peak and valley of the signal, the noise component is at a zero crossing point, mostly eliminating it as an error. The results of this demodulation are the two sample and holds, one with a peak signal and the other with a valley signal, both riding on a 50/60 Hz ripple signal. The differential amplifier will remove this common mode noise. The sample and hold circuits (U7 and U8) are SMP-11 circuits, which are composed of op-amps and analog switches. A low input on the sample line causes the output to track the input, and a high level causes the output to hold the last value by storing the signal on a capacitor (C34 or C38).

Differential Amplifier. The differential amplifier amplifies only the difference between the two outputs from the sample and holds. Since both sample and hold circuits are riding on a common mode 50/60 Hz ac ripple, this ripple is removed by this stage. The amplifier used is part of the U6 package (LM349) and the gain is controlled by R30, R31, R32, and R33.

These ratios yield a gain of 10. C35 and C37 are added to filter out the ripple caused by the demodulation of the signal. The output is available on the gain test points for both channels 1 and 2 and also goes to the analog-to-digital convertor. The computer then accesses the A/D and reads an 8-bit digital value. The conversion is from 0 to 10.0 volts. The equivalent digital count is from 0 to 255 (base ten). An input above ten volts yields 255 counts.

2.5.4.8 Centrifuge motor control. The Cell Saver 4's centrifuge is driven by a high speed DC motor. The control for this motor is accomplished by utilizing Hall effect sensors on the centrifuge spindle, a single chip microcontroller, and a high power SCR bridge. (See Figure 2-36 for a system block diagram). Two speed sensors on the centrifuge spindles feed signals to the main CPU (8085) and motor control CPU (8749). The 8085 monitors the speed using its speed sensor and can open the main control relay and remove power to the motor if it senses an overspeed condition. The 8749 uses its speed sensor to set the firing angle of a power SCR bridge which allows operation at the desired speeds. Braking of the centrifuge is accomplished by reversing the polarity of the voltage applied to the motor. All control commands such as speed and braking are sent from the main CPU to the motor CPU which replies with status conditions. Because all functions are digital and based on division of a high speed crystal driven clock, extremely accurate speed control is accomplished without any system calibration or adjustment. See Figures 2-37 through 2-40.

8749 Microcontroller

The heart of the system is Z10 and a 8749 programmable single chip computer.

The 8749 device comes originally from the manufacturer unprogrammed; Haemonetics electrically programs the program memory and places an opaque label over the clear window on the top of the device. This label has printed on it a Haemonetics part number and program revision. It also prevents U.V. light from striking the device's window and erasing the stored memory. This device can be upgraded to hold a newer version program by removing the label, exposing the device to intense U.V., and then reprogramming the memory. This obviously can only be accomplished with specialized equipment.

The 8749 is driven with a 6.0 MHz crystal and has its To pin programmed to provide out a constant 2.0 MHz clock signal. This clock is provided to the 8253 counter Z12.

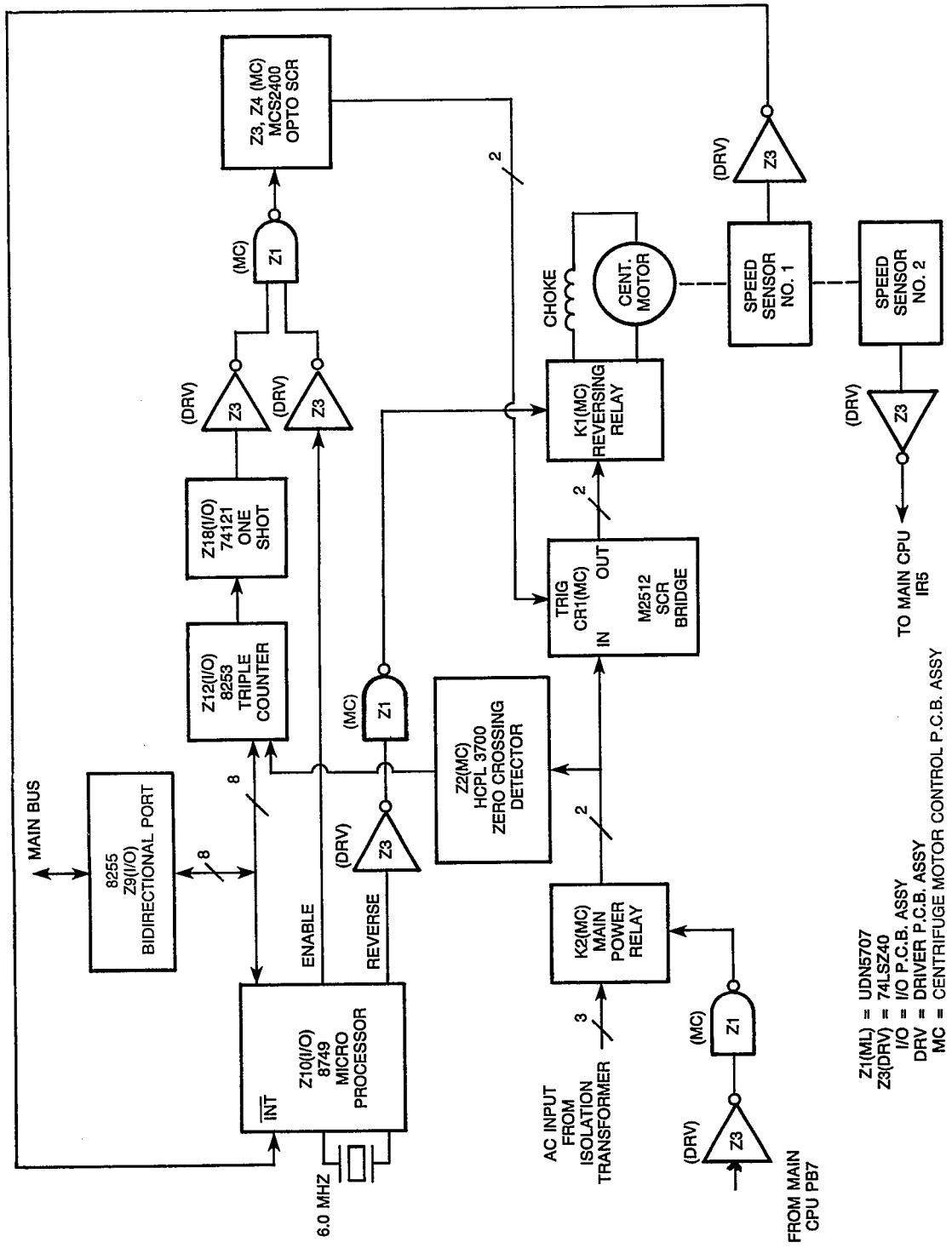

Figure 2-36, Centrifuge motor control block diagram

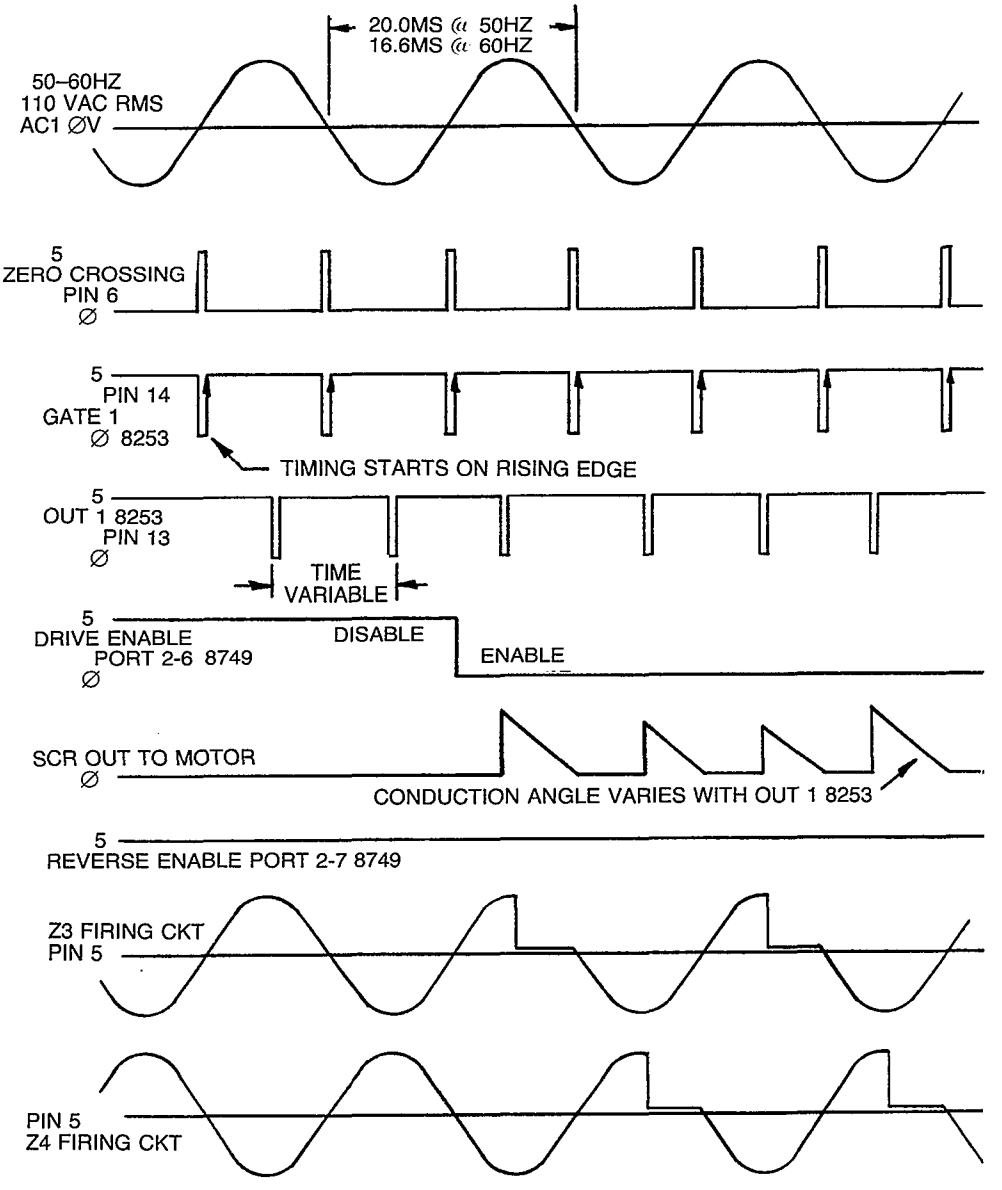

Figure 2-37, Timing diagram SCR firing run mode

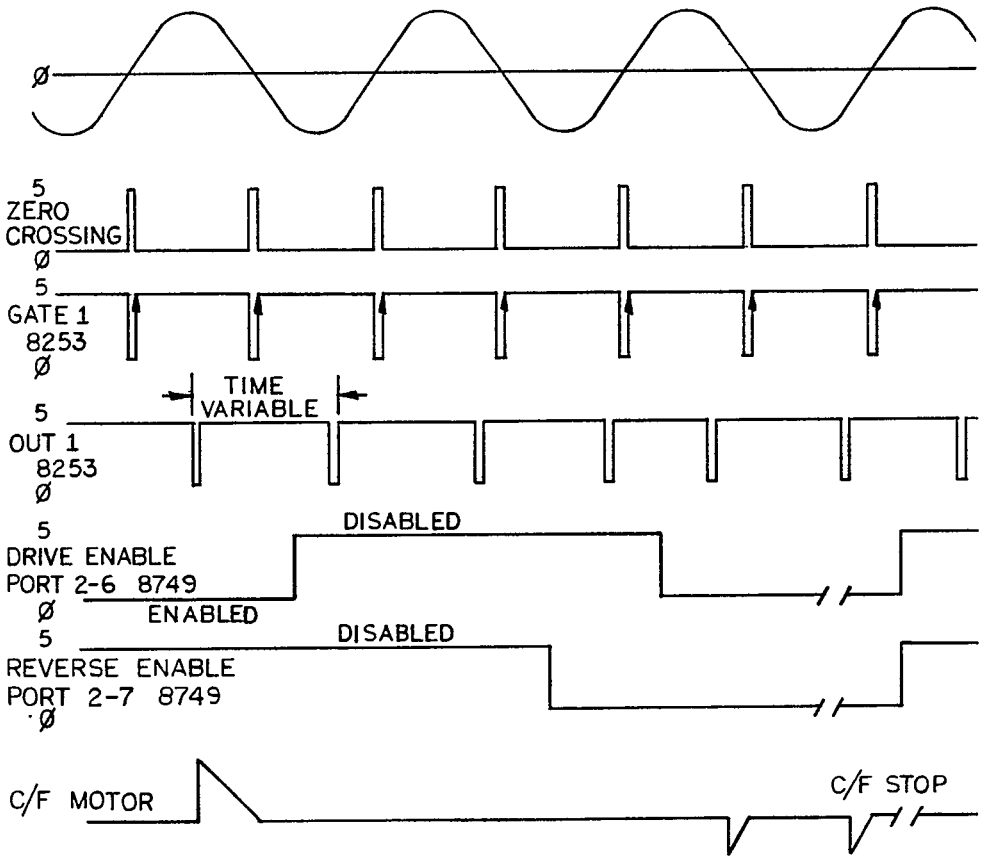

Figure 2-38, Timing diagram brake mode

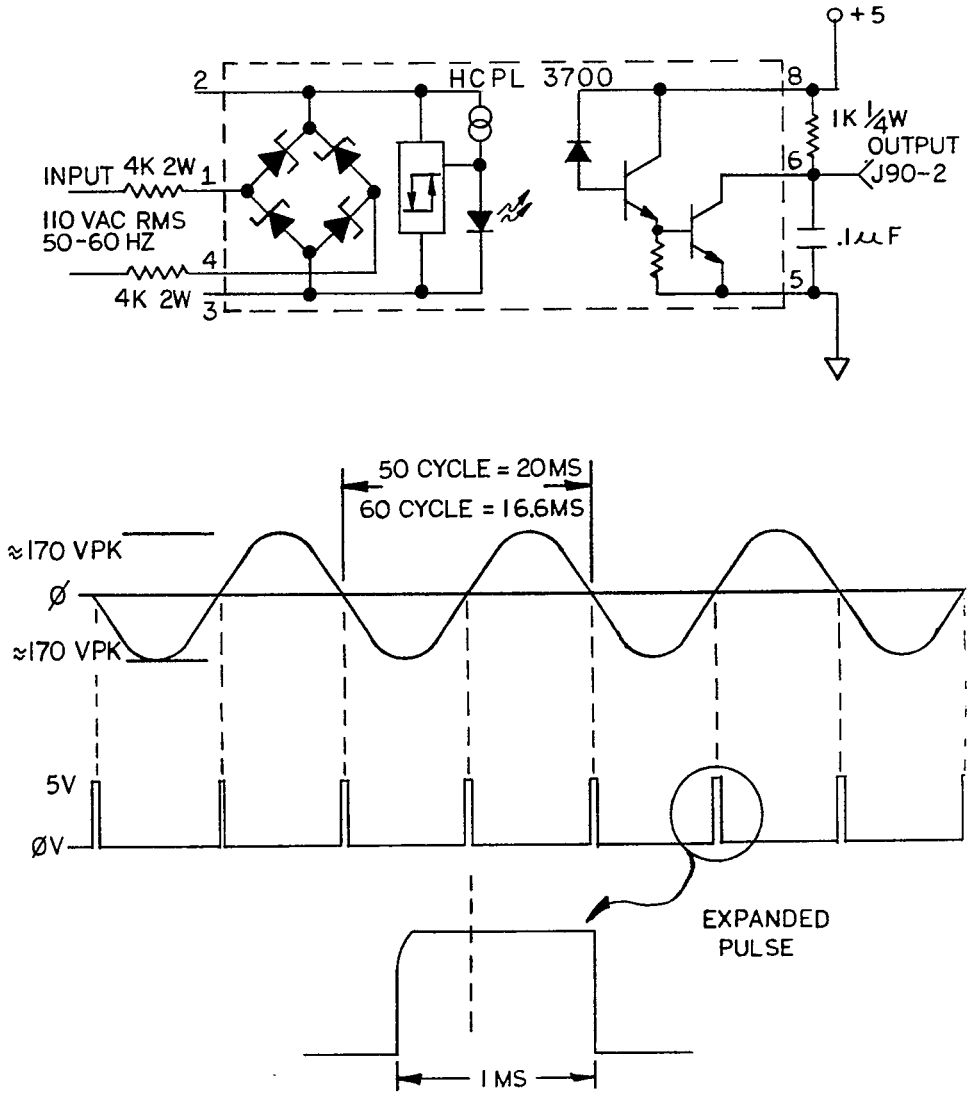

Figure 2-39, Zero crossing circuit block diagram

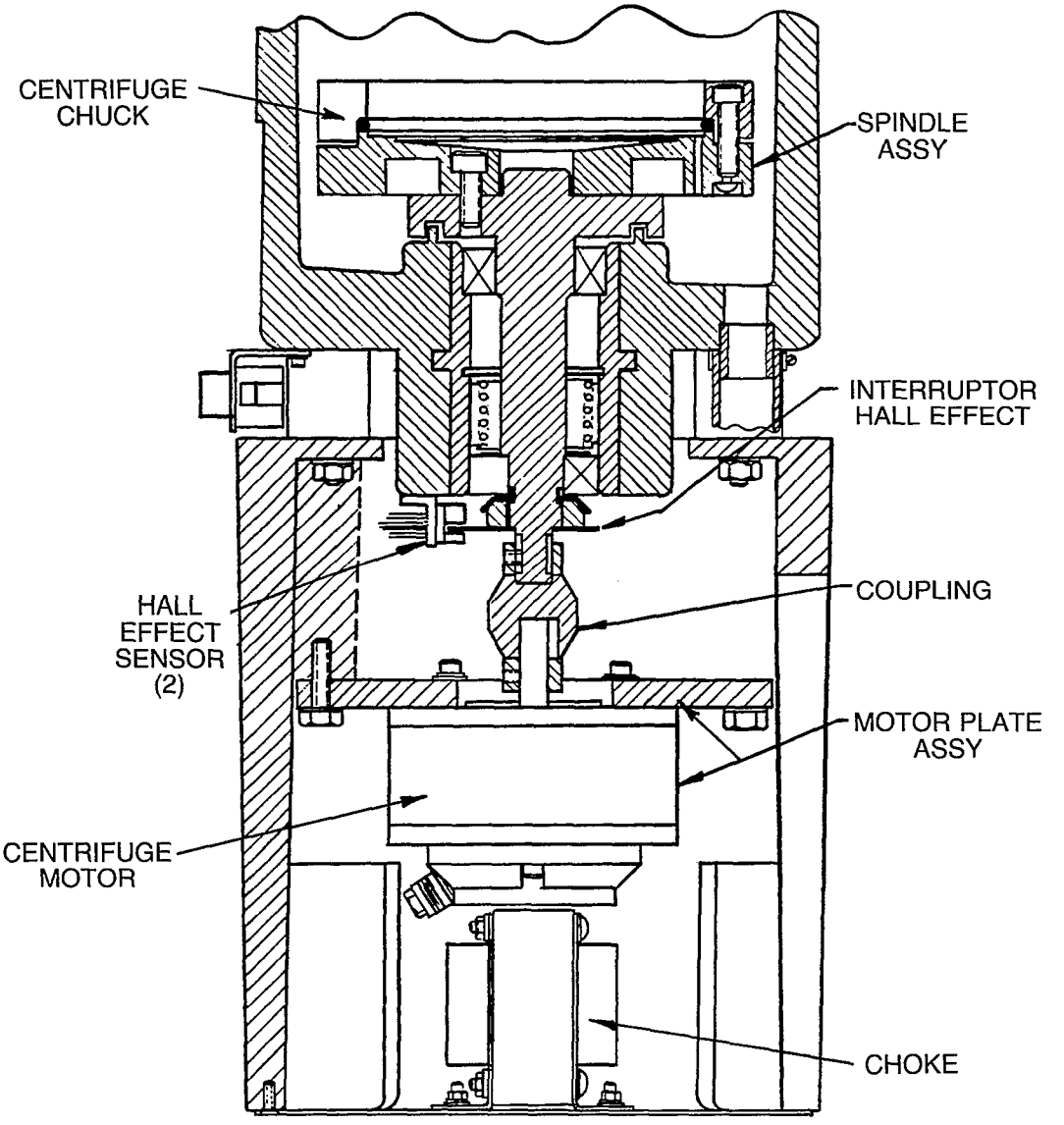

Figure 2-40, Centrifuge motor, cutaway view

Port 1 of the 8749 is reserved for current measurement of the centrifuge motor but is not used in the CS4. Port 2 of the 8749 is used for general purpose control. Refer to Table 2-6 below for detailed operation.

Table 2-6
Port 2 8749

Bit	Pin No.	Usage
P_{20}	21	0 = Write to 8255 Port
P_{21}	22	1 = 8253 timer T_3 run
P_{22}	23	0 = Clear 8255 ACK flag
P_{23}	24	0 = Enables 8253 BUS Input
P_{24}	35	A0= Address input 8253
P_{25}	36	A1= Address input 8253
P_{26}	37	0 = Centrifuge motor enable
P_{27}	38	0 = Centrifuge motor reverse

Pin 6 of the 8749 is the interrupt input which accepts a signal from one of the centrifuge spindle sensors. This allows the computer to sense whenever one complete revolution of the centrifuge is completed. The exact length of time for the revolution is contained in register T_3 of the 8253 IC, Z12.

The 8749 utilizes T_1, pin 39, as a testable input and examines this bit to determine when the 8255, Z9, has data is its output buffer. When this bit goes to a logic low, data for reading by the 8749 is indicated.

Communication

All commands for centrifuge operation are initially derived by the 8085 main processor. These commands include:

- Run
- Stop
- Rotational Speed

The 8749 Motor CPU waits for these commands, processes then, and replies with status conditions. These conditions include:

- Running
- Speed reached
- Braking
- Stopped
- Requested speed out of range
- Sensor fault
- Overspeed fault

This bidirectional exchange is accomplished by use of port A and C of the 8255 I/O device, Z9. This programmable I/O device is initialized at turn-on to utilize port A as an 8 bit bidirectional handshaking port with port C as control.

Data from the 8085 to the 8749 is initiated by the 8085 writing to port A of the 8255. This write causes PC_7 pin 10, of the 8255 to go to a logic low indicating to the T_1 input, pin 39, of the 8749 that the output buffer is full. When the 8749 is ready to accept this data, it places a logic low at P_{22}, pin 23, which drives the ACK input of the 8255, pin 11. This logic low enables the port A output tri-state drivers and the 8749 reads the data through its BUS input. After the read is completed P_{22} is returned to a logic high disabling the port A drives and resetting the output buffer full bit. This process is repeated for every byte of data that needs to pass from the 8085 to the 8749.

Status information from the 8749 to the 8085 takes much the same route for transmission. When ready to send data, the 8749 places a logic low on P_{20}, pin 21. This allows the WR pulse, when toggled, to pass through the 2 input or gate Z15A and be read by the strobe A input, pin 13, of the 8255. When the 8749 performs a write on its BUS the data is latched into the 8255 port A input buffer. This causes PC_5, pin 12, of the 8255 to go to a logic low. This buffer full signal is read by the 8085 CPU from PC_0, pin 14, which is accessible as an input bit. When the 8085 performs a read on port A this PC_5 returns to a logic high.

Programmable Counters

Timekeeping functions for the Motor Control is performed by Z12 an 8253 triple programmable timer counter. A block diagram of this device can be found in the CPU Theory operation. There are three separate 16 bit counters inside this device which can perform in a multiple of modes. Upon turn-on the 8749 initializes the three counters to their proper modes. The processor has access to the control and counting registers of the 8253 through the data BUS inputs D0 - D7. Control of which register is read or

written to is performed by address inputs A0 and A1, pin 19 and 20 respectively.

Counter 1 of the 8253 is programmed to act as a clock prescalar for the other two counters. A 2 MHz clock signal is output from T0, pin 1, of the 8749. This constant frequency signal is applied to the CLK input, pin 9, and is divided by counter 1 to provide a 500 KHz signal at its output, pin 10. This 500 KHz signal is then provided to the clock inputs of counter 2 and counter 3, pins 15 and 18 respectively. Counter 1 has its gate enabled continuously by the 1K pullup resistor R14 connected to pin 11.

Counter 3 is programmed to accumulate the time the centrifuge takes to complete one revolution. Whenever the 8749 receives an interrupt from the spindle sensor it performs a sequence of steps which include the following:

1. Stops counter three by lowering P_{21} the gate control.

2. Reads the contents of counter three through the data bus.

3. Clears counter three.

4. Enables counter three by raising P_{21}.

5. Enables Interrupt input for next revolution completion.

6. Converts time measured by counter three to rpm.

7. Compares actual rpm to desired rpm.

8. Calculates required firing angle of SCR bridge.

9. Outputs new firing angle to counter 2.

10. Examines for new data form main CPU and waits for next interrupt from speed sensor.

Counter 2 controls the firing angle of the power SCR bridge. This of course directly affects the rotational speed of the centrifuge. This counter derives its clock time from counter 1 and is programmed to count down from a number inputted through the data bus from the 8749. The countdown starts when the gate input, pin 14, is brought to a logic high. This gate signal is driven form a zero crossing detector on the Motor Control board. This device examines the AC line, either 50 or 60 Hz and outputs a pulse when the waveform crosses zero. This synchronizes the control to the AC input line. Timer 2 does in fact contain the time after zero crossing that the SCR bridge will be commanded to start conduction. The

output from counter 2 is a negative going pulse which is the width of one input clock. This width is not long enough to reliably trigger the SCR bridge into fill conduction. A one shot pulse stretcher, Z18, is used to stretch the trigger pulse to 15 micro seconds. The length of this pulse is controlled by R46 and C49. For every input pulse Z18 gives only one output pulse.

For further information on the Motor Control refer to the Theory of Operation - Driver Board, and Theory of Operation - Centrifuge Motor Control Board.

2.5.5 Driver printed circuit board (Part no. 13117-02)

(See Figure 2-41.)

2.5.5.1 System interconnections

All interconnections between the computer system and the driver board are provided by two ribbon cable connectors at the rear of the pcb. There cables originate at the I/O board and are W30 and W31, 34 and 20 conductors respectively. The driver is connected to the motor control board by the 14 conductor ribbon cable W90. Other system connections are provided by Metric Mate connector J40, J50, J60, and J64. These last four connectors are discrete wire devices and all pass thorough J140 which allows simplification of driver board removal. (See Figures 42 and 43.)

2.5.5.2 Signal transfers

The Driver pcb transfers a number of signals from the system to the CPU without modification. These signals include the following:

- Speaker Drive
- Air Detector
- Pump Counter
- Cover Lock

A detailed analysis of these signals can be found in the I/O theory of operation.

2.5.5.3 Signal buffers

The Motor Control signals pass through the driver board. These signals are buffered by Z3, a 74LS240 driver. These signals travel in both directions through the Driver pcb. The Reverse, Enable, Trigger and Power Control signals pass from the I/O to the driver and on through W90 to the Motor Control. The speed 1, speed 2, and zero cross signals originate on the Motor Control board and are passed through W90 and the driver board

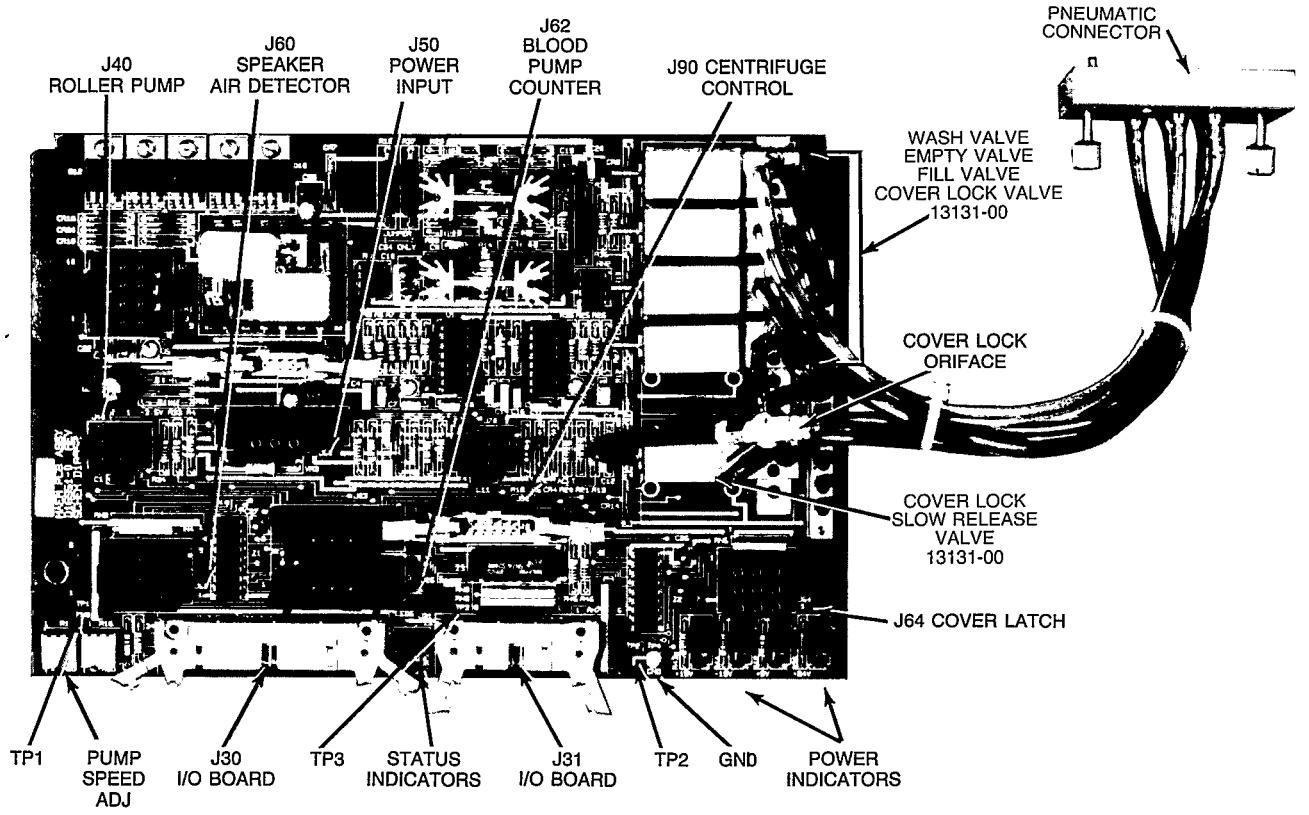

Figure 2-41, Driver board

to the I/O board. Z3 also provides the drive for LED 5 which indicates the operation of the speed sensor number 1.

2.5.5.4 Output drivers

The I/O board controls 5 high power low impedance Hex FET drivers in the I/O board, Q8 - Q12. These devices are not utilized in the Cell Saver 4.

2.5.5.5 Valve drivers

The I/O board provides control signals for 8 pneumatic valves. The Cell Saver 4 utilizes five of these devices. The control signals pass from the I/O board through ribbon cable W30 and are use as inputs by Z2. This ULN2803A driver directly controls the 8 pneumatic valves V1 through V8. These valves are driven from 24 volts with CR8 - CR15 absorbing the valves inductive kickback. The valves used are all three-way normally closed devices. Their operation is detailed in Figure 2-44. Three valves are dedicated to operating the three pinch clamps which control fluid flow in the disposable.

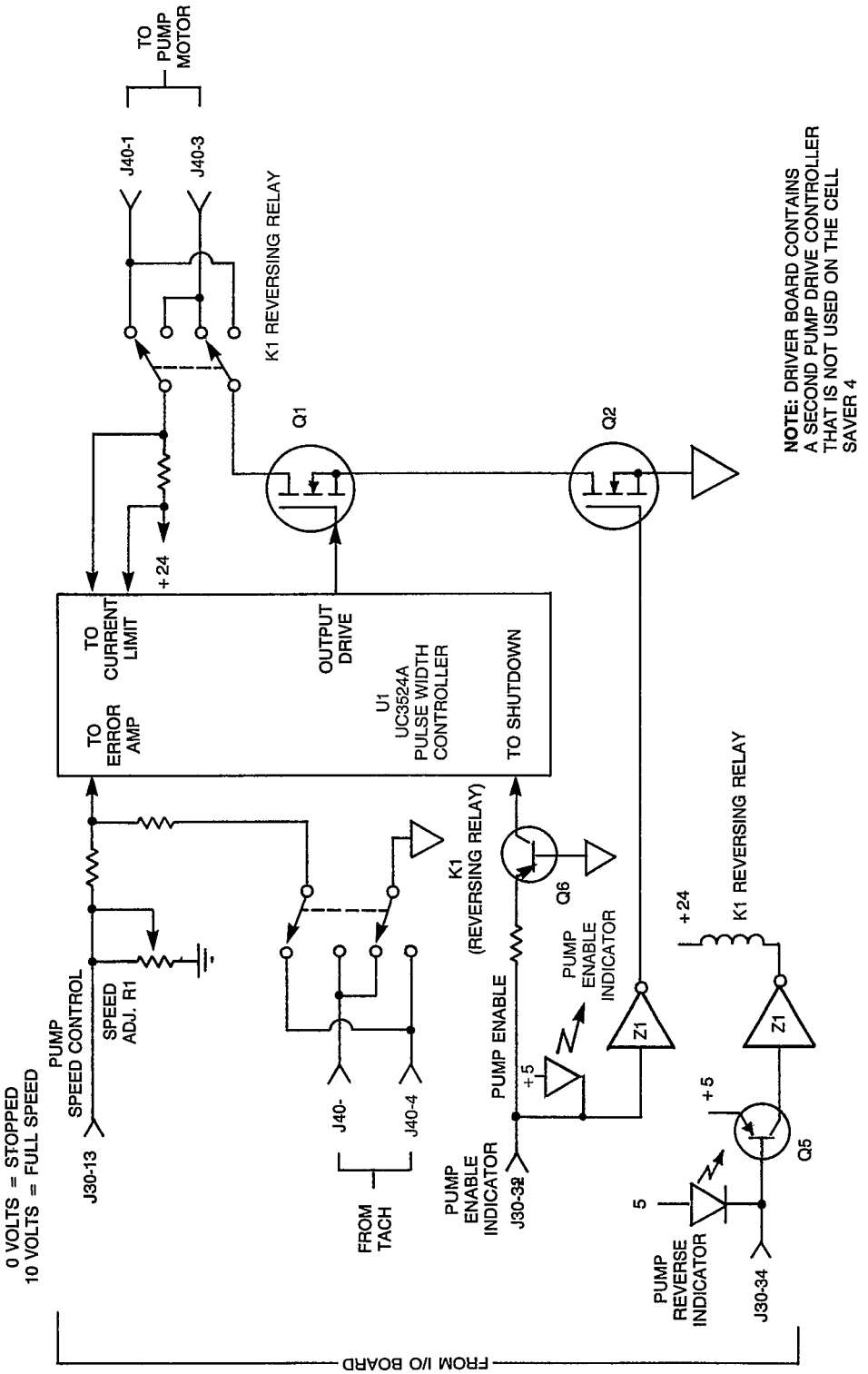

Figure 2-42, Driver PCB block diagram part A

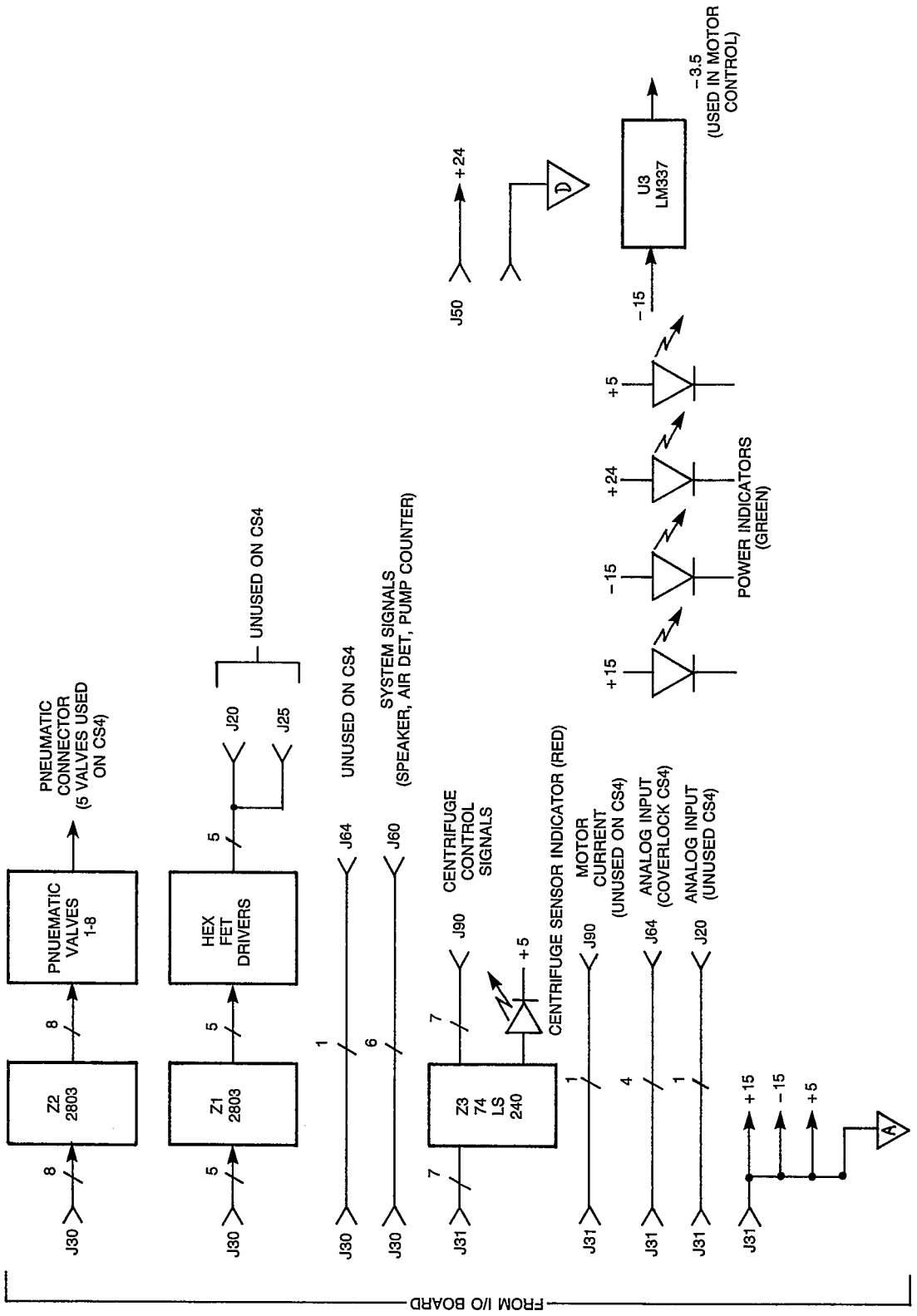

Figure 2-43, Driver PCB block diagram part B

Two of the valves are dedicated to running the cover switch mechanism. One valve operates the air cylinder for the latch and the second controls the slow bleed off function. Refer to cover latch theory of operation for further information. Detailed flow of the pneumatic system can be found in the pneumatic schematic in Chapter 8.

2.5.5.6 Pump control. The driver pcb contains two pulse width motor controls drivers, one of which can also control motor direction. This reversible controller is the only one utilized in the CS4. The Block Diagram of the pump control can be found in Figure 2-45. The pump speed control originates on the I/O board when the main processor latches an 8 bit word into the D to A convertor producing a voltage between 0 (stop) to 10 volts (full speed). This voltage is transferred to the Driver board where it is summed with the output of an analog tachometer that is attached to the shaft of the pump motor. This tachometer output voltage is used to produce extremely good speed regulation of the pump motor under varying load conditions. Pump speed is monitored by an independent hall effect sensor providing a pulse train back to the processor which allows the CPU to check that the desired pump speed is indeed obtained. This digital feedback is not used to alter the output control signal from the D to A but only used as a check on system performance.

2.5.5.7 Pump Speed request input. The Speed Request signal is generated on the I/O PCB by the Digital to Analog converter, and is brought onto the Driver PCB on J30-13. The signal will vary from zero to ten volts for a speed request of zero to 1000 ml/min. R1 and R2 form a variable voltage divider to allow calibration of pump speed. R3 is used to sum this signal into the Error Signal point.

2.5.5.8 Pump Tachometer Feedback. The Tachometer feedback signal is connected to J40-2 and J40-4. The positive tach signal is connected to ground and the negative tach signal is available to the summing point already inverted. R4 is added across the tachometer output to provide a minimal load to provide the required brush cleaning current to ensure a good commutator brush film. (Note: The brush film is that which develops on the commutator to provide both lubrication and a means for brush and commutator conduction. C1 filters out brush noise that would create radiated EMI noise. R5 and C2 form the tachometer filter that is used to filter out both brush and motor noise. Use this point to measure the tach feedback voltage if required. The tach voltage should vary form zero to -20 volts as the speed varies from zero to full speed. R6 and C3 provide positive phase compensation and a means of summing the tach signal into the error signal node.

SIDE VIEW OF PNEUMATIC VALVE

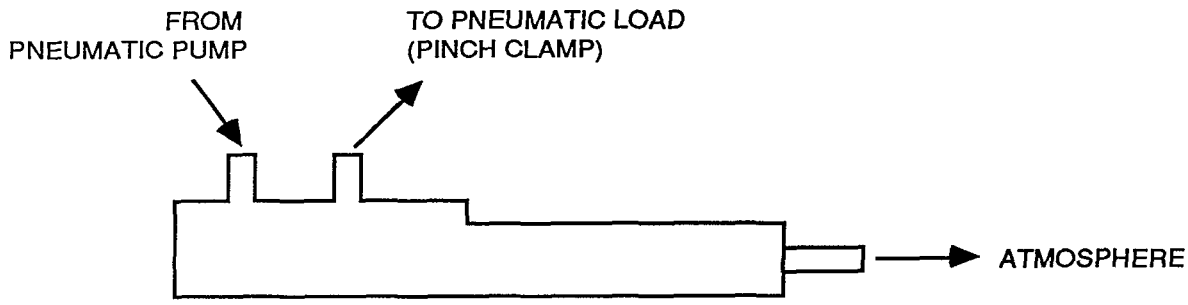

UNENERGIZED MODE

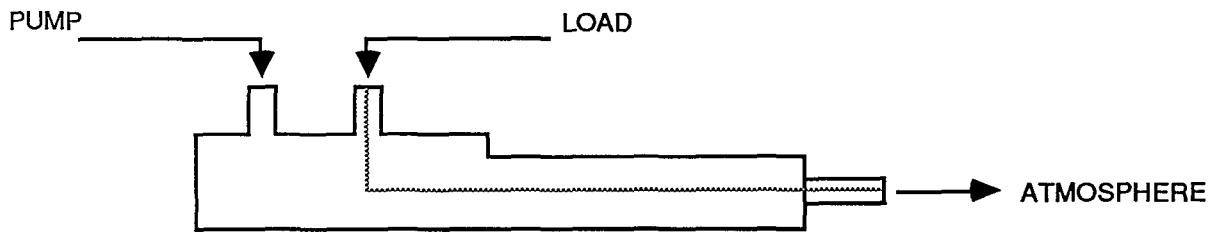

- PUMP DOES NOT DRIVE LOAD.
- LOAD IS VENTED TO ATMOSPHERE.
- LED ON I/O PCB ILLUMINATED.

ENERGIZED MODE

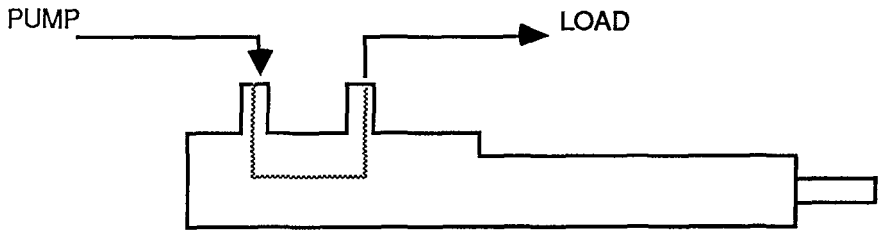

- PUMP DELIVERS AIR DIRECTLY TO LOAD
- LED ON I/O PCB IS OFF

Figure 2-44, Side view of pneumatic valves

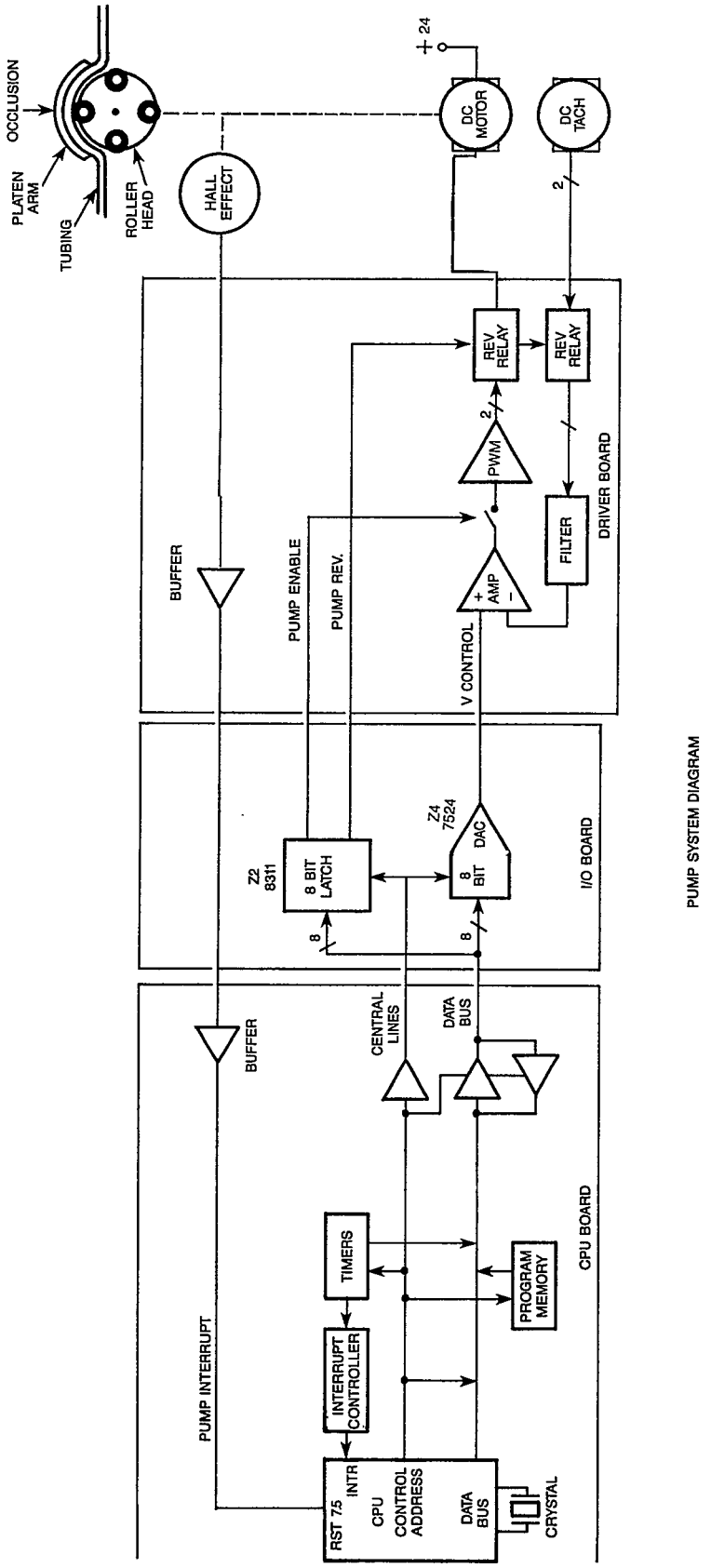

Figure 2-45, Block diagram, pump control

2.5.5.9 Error Amplifier. The error signal is available across CR2. The error signal should be within ±0.5 volts referenced to ground. CR1 and CR2 provide a voltage clamp during transients and as a protection to U1.

The error signal is amplified by the error amplifier built around the controller op amp in U1. R8 and R7 set the DC voltage gain, while the combination of R8, R9, C4, and C5 provide required phase / gain compensation. The output of the error amplifier is available on R8 and will vary from -3.0 volts to 0.0 volts as the request speed varies from zero to full speed at full load. (The output is both speed and load dependent.)

2.5.5.10 PWM Power Control. The PWM (Pulse Width Modulation) control converts the analog control signal from the error amplifier into a pulse width proportional to signal level. The PWM controller, U1, a UC3524A, provides the error amplifier, input comparator, a current limit comparator, a ramp generating oscillator, shutdown control logic, and output control logic. The oscillator runs at a frequency of 40 kHz, which is established by the combination of R12 and C6. The output of the oscillator generates a reset pulse to the output control logic and a ramp output that goes from -3.0 volts to 0.0 volts. The control signal from the error amplifier and the ramp signal from the oscillator are compared by the input comparator. When the input signal is less than the oscillator ramp signal, the output drive provides power, and when it is less, the output drive is off. Thus, as the control signal varies from -3.0 volts to 0.0 volts, the power output duty cycle varies from 0% to 100%. The output control logic receives a reset pulse from the oscillator, which turns the output drive transistors on. The output from the input signal comparator causes the control logic to latch the output drive transistors off. Only a reset pulse from the oscillator may re-enable the output drive. The output control logic drive may be disabled by the shutdown control logic, as discussed under the topic of Pump Disable. The current limit comparator is used to disable the output drive during over current conditions. When the differential input exceeds the internal 0.20 volt offset, the current limit comparator pulls the output of the error amplifier down below -3.0 volts, causing the input comparator to disable the output control logic. Reference the topic of Current Limiting.

The UC3524A also provides an internal +5 volt reference, which is not accessed externally. The controller is powered from +24 volts and -3.5 volts. The -3.5 volt supply is used to allow the error amplifier input to be referenced to analog ground and to maintain operating input ranges for the error amplifier. This results in all signals internal to the UC3524A being offset by -3.0 volts when referenced to analog ground.

2.5.5.11 Drive Circuit. The Drive Circuit switches power to the pump motor as a function of the discrete output from the PWM controller.

The output from the UC3524A are two uncommitted power transistors. The collectors are tied to +15 volts, providing a switched 15 volt output on the emitters. R13 acts as a pull down resistor so that the input to R14 will switch from 14.5 volts (on), to 0.0 volts (off). The value of R14 (2 kohms) was selected to control the turn on and turn off times of Q1 to minimize generated EMI (Electro-Magnetic Interference). The VR1 zener diode prevents transients that are capacitively coupled from the drain to the gate of Q1 from damaging the transistor or the PWM controller. The signal to the gate of Q1 (IRF521) thereby controls turning Q1 on and off according to the output of the PWM controller.

The Pump Motor is connected from +24 volts (Armature positive) to the drain of Q1 (Armature negative). The source of Q1 is connected to the drain of Q2, which is used to redundantly disable the drive circuit as explained in the pump disable section. When both Q1 and Q2 are activated, power is applied to the pump motor. Q2 remains on during pump operation, and Q1 controls power applied to the motor. When Q1 turns on, the current through the motor goes to ground through Q1 and Q2. When Q1 turns off, the motor current continues to flow due to the inductance of the motor armature, however it now must flow through CR3 (UES1301), the freewheeling diode. As Q1 turns on and off, the voltage on the negative side of the armature goes from ground to slightly above +24 volts (by the forward diode drop of CR3), however the current will remain constant and proportional to the torque requirement of the motor. (Note: Due to the switching voltages applied to the motor, any attempt to accurately measure the motor armature voltage with either a voltmeter or a oscilloscope will be difficult. If a voltage reading is required, build a filter out of a 10 kohm resistor and a 0.1 μF capacitor.) The VR2 zener diode protects any switching transients caused by the inductance of PCB traces from damaging Q1. The filter capacitors C9 and C10 decouple the effects of the power switching from the rest of the +24 volt supply. As Q1 switches, the current requirements to the motor from the supply goes from zero to the actual motor current. The decoupling allows the power supply to provide only a steady state current that is proportional to the power requirement of the motor. (Example: The motor requires 6.0 volts at 2 amps (12 watts). The PWM power control will provide 2 amps at 24 volts with a duty cycle of 25%. (During the off time the 2 amps freewheels through the CR3 diode.) The decoupling capacitors average out the current requirement from the 24 volt supply to 0.5 Amps (2 Amps x 25%). Only the required power is supplied by the power source.) The Q1 transistor will dissipate only the power lost due to the on resistance (0.3 ohms) and the switching delays (0.6 μSec.).

2.5.5.12 Current Limiting

The Current Limiting for the CS4 pump motor is 4.0 Amps. The current sensing resistor, R15, is placed in series with the 24 volt supply connection to the motor. The resistance value is 0.2 ohms. The power control system will disable the power drive when 0.4 volts or greater is present across R15. A jumper is provided to connect R37 in parallel with R15 to decrease the current sense resistance to 0.1 ohms, to allow a 4.0 amp current limit for the CS4 pump motor application.

The RN1 resistor network is a matched thin film resistor network. This network divides the voltages across R15 in half (both the differential and common mode voltages) to provide inputs to the PWM controller, U1, that are within a usable range. When the motor current develops a differential voltage across R15 in excess of 0.4 volts, a differential signal is presented across the current sense inputs of U1 in excess of 0.2 volts. The current sense comparator in U1 has an internal 0.2 volt offset that, when exceeded, pulls the output control signal from the error amplifier low, causing the power drive stage to turn off. C8 provides filtering across RN1 to prevent current transients, created due to capacitive loads across the motor, from causing premature current limits. This method provides cycle by cycle current limiting that can provide constant current driving and prevent a direct short across the motor lines from damaging any components.

2.5.5.13 Pump Disable. The Blood Pump Disable signal is generated as a discrete output from the I/O PCB. A high level or open output from the I/O PCB, greater than 3.5 volts, disables the pump control circuit. A low level output or connection to ground, less than 0.8 volts, enables the pump control circuit. An on board LED, LED5-1, between J30 and J31, illuminates during pump enable. The pump motor drive is disabled redundantly to ensure failsafe operation. The pump drive is disabled primarily by the shutdown circuitry within U1. The disable signal is level shifted with Q6, R10, and R11 down to the -3.5 volt supply of U1. R11 acts as a pull down resistor, R11 being the disable input to U1. A disable signal below -3.0 volts will disable the drive and above -2.5 volts will enable the drive.

The redundant pump disable is accomplished using Q2. The darlington transistor array, Z1 (ULN2803), pulls the gate of Q2 low, turning off the transistor. Q2 is turned on by Z1, by letting the RN3 resistor network pull the gate high to +15 volts.

2.5.5.14 Reversing Relay. The Reversing Relay is present only in one of the pump circuits and is used to run the pump in the reverse direction. The Reversing Relay, K1, is four pole double throw (4PDT) relay that reverses the pump direction by swapping the polarity of both the armature and tachometer lines. In the disabled state, the relay is configured to run the pump in the FILL or forward direction.

The relay control signal is generated as a discrete output of the I/O PCB and is connected through J30-34. A high level or open input, typically 5.0 volts, deactivates the relay allowing operation in the forward mode. A low level output, or connection to ground, 0.8 volts or less, energizes the relay, reversing the pump. An LED, LED5-2, illuminates to indicate the relay is energized and the pump will run in reverse. The relay is energized by the darlington transistor array, Z1, which acts as a low side switch to the K1 relay coil, with the high side of the coil tied to +24 volts. The CR7 diode suppresses switching transients. To provide compatibility with the existing equipment, Q5 (2N2907) is added to invert the relay control signal to compensate for changing the relay operation state. The output from Q5 into Z1 is greater than 4.0 volts to energize the relay, and less than 0.8 volts to disable it.

2.5.6 Centrifuge motor control printed circuit board

The motor control pcb takes signals produced on the I/O board and uses them to drive the centrifuge motor at the correct speed. All high power elements of the centrifuge control are mounted on this board. Refer to Theory of Operation for the I/O board for detailed motor control information.

2.5.6.1 Speed sensors. Speed sensors 1 and 2 are transfered through the motor control board. These signals are derived from Hall effect devices located on the centrifuge spindle. They both provide one pulse for every revolution of the centrifuge. They enter the board at connector J2 and are passed by ribbon cable W90 to the driver where they are buffered.

2.5.6.2 Power control. Power to the centrifuge motor is provided by the SCR bridge CR1. This bridge inputs ac voltage from the isolation transformer and supplies rectified dc voltage to the motor. This bridge uses SCRs which allow for passing only part of the rectified dc waveform. This power control ability allows the motor control computer to vary the bridge trigger signal and alter centrifuge speed.

The trigger and enable outputs from the I/O board are applied to the NAND driver Z1A. Its output drives the optically isolated SCRs Z3 and Z4. The small SCRs in turn control the turn-on of the high power SCR bridge. Z3 abd Z4 are used to isolate the ground of the relatively noisy centrifuge motor from the logic ground. This ground isolation prevents transients generated by the motor from adversely affecting computer performance.

2.5.6.3 Overspeed protection. If the motor CPU or associated circuitry should fail in a mode that causes excessive centrifuge speed, a back-up system will prevent high motor speeds. The main CPU upon power-up energizes Z1-C causing the closing of relay K2. K2 applies the AC input power to the SCR bridge and must be energized for any centrifuge operation. The main CPU constantly monitors the centrifuge speed by use of speed sensor 2. If it should ever see excessive speed at the centrifuge it will remove Z1-C drive and K2 will de-energize. This of course will remove all centrifuge power and it will coast to a stop. The main CPU will indicate the error to the operator and will require power resetting before it will re-energize K2.

2.5.6.4 Zero crossing detector. The motor CPU requires synchronization to the AC line frequency to accomplish control of the SCR Bridge firing angle. Z2, a HCPL 3700 zero crossing detector, accomplishes this task. It monitors the AC waveform and outputs a negative pulse whenever the waveform passes through zero. Internal opto-isolation allows separation of the logic and power grounds.

2.5.6.5 Braking. The motor control brakes the centrifuge by reversing the applied voltage to the motor. When the motor CPU receives the braking command from the main CPU the following steps are undertaken.

1. Stop trigger pulses
2. Remove Drive enable
3. Energize K1 (reverse motor polarity)
4. Enable Drive
5. Restart trigger pulses
6. Monitor centrifuge speed for zero RPM
7. At zero RPM remove drive enable
8. Stop trigger pulses
9. De-energize K1
10. Signal main CPU that centrifuge has stopped.
11. Await further main CPU commands

2.5.6.6 Indicators. The motor control board has three LED indicators that provide important status information.

1. GREEN: Drive enable, illuminated when motor enabled
2. YELLOW: Reverse, illuminated when running
3. RED: Overspeed, illuminated when centrifuge speed is within specifications and K2 is energized

2.6 PNEUMATIC PINCH VALVES

2.6.1 General description

The CS4 uses pneumatic pinch valves (controlled by the microprocessor) which open or close to allow or stop the flow of fluid within the tubing in the valves. The valves are pneumatically operated by the air compressor within the machine or manually operated by the lever on the valve. All valves are normally closed (in other words, if there is a lack of power, the tubing in the valve is pinched off).

2.6.2 Operation

A spring pushes the plunger forward to occlude the tubing when the logic in the machine does not send compressed air to it. When the logic sends compressed air (28 psi maximum) to a valve, the air pressure acting over the area of the piston overcomes the spring force and the valve opens.

2.6.3 Specifications

The specifications of the pinch valves require that with a piece of optically clear IV tubing installed in the tube guide and the valve closed (pinched-off), the valve will not leak air when the tubing is pressurized to 250 mm Hg. This determination is made by observing that the free end of the tubing does not emit bubbles when submerged in water.

2.6.4 Pneumatic pinch valve tubing manifold (See Figure 2-46). The pneumatic pinch valve tubing manifold simplifies the removal of the driver pcb. To remove the Driver pcb only two screws must be removed from the manifold. Because the manifold is keyed to an offset alignment pin it cannot be connected incorrectly. Without this manifold it would be necessary to disconnect all pneumatic tubing from the pcb to remove the board.

2.7 CENTRIFUGE COVER LATCH

(See Figure 2-47.)

The Cell Saver 4's centrifuge normally spins at 5650 revolutions per minute. The energy contained by the spinning bowl and chuck is quite high and could cause injury if the operator accidentally came in contact with them while they were turning. To prevent this from occurring and safeguarding the operator, a centrifuge cover latch is implemented. This latch mechanism performs the following functions:

1. Prevents the centrifuge from starting unless the cover is closed.

2. Prevents the cover from being opened while the centrifuge is spinning.

3. Provides a pneumatic driven time delay which prevents the centrifuge cover from being open if the centrifuge is coasting to a stop after a power loss.

To perform this function the Cell Saver 4 uses 2 control valves, a flow restrictor, an air cylinder, and a micro switch. (Refer to Figure 2-47.)

2.7.1 Locking mechanism

The actual locking action is performed by extending a locking bar into the hinge mechanism. This bar is extended by the use of an air cylinder and cannot be fully extended unless the cover is closed. Mounted near the air cylinder is a micro switch that senses the position of the air cylinder. Only when the cylinder is fully extended does this switch close and send the "Cover Locked" signal to the computer.

Sequence of Operation

1. Computer waits for "Centrifuge Start" request with valve #6 energized and valve #4 unenergized.

2. When computer receives request to start centrifuge, it first energizes valve #6.

3. The air pump fills air tank and attempts to extend air cylinder.

4. If switch does not signal that cylinder has extended, the computer displays "Close Centrif Cover" and waits.

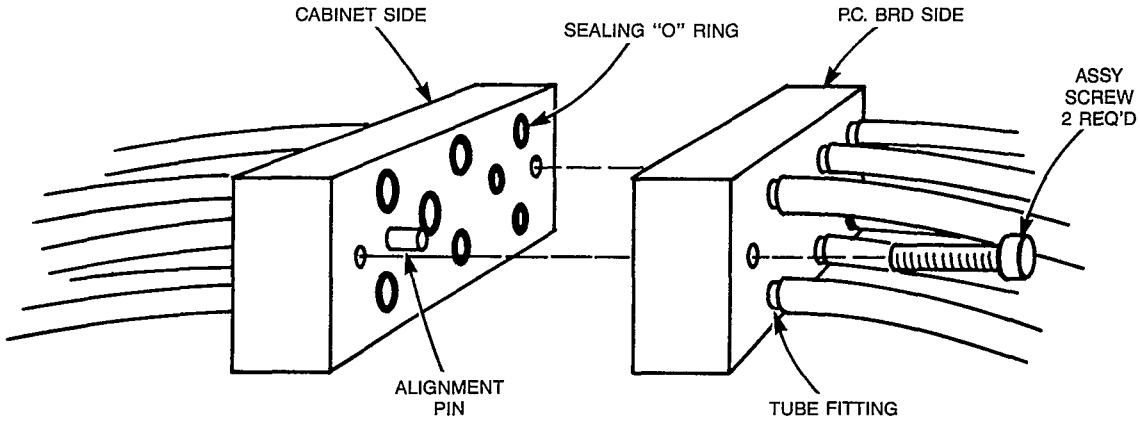

Figure 2-46, Pneumatic valve tubing manifold

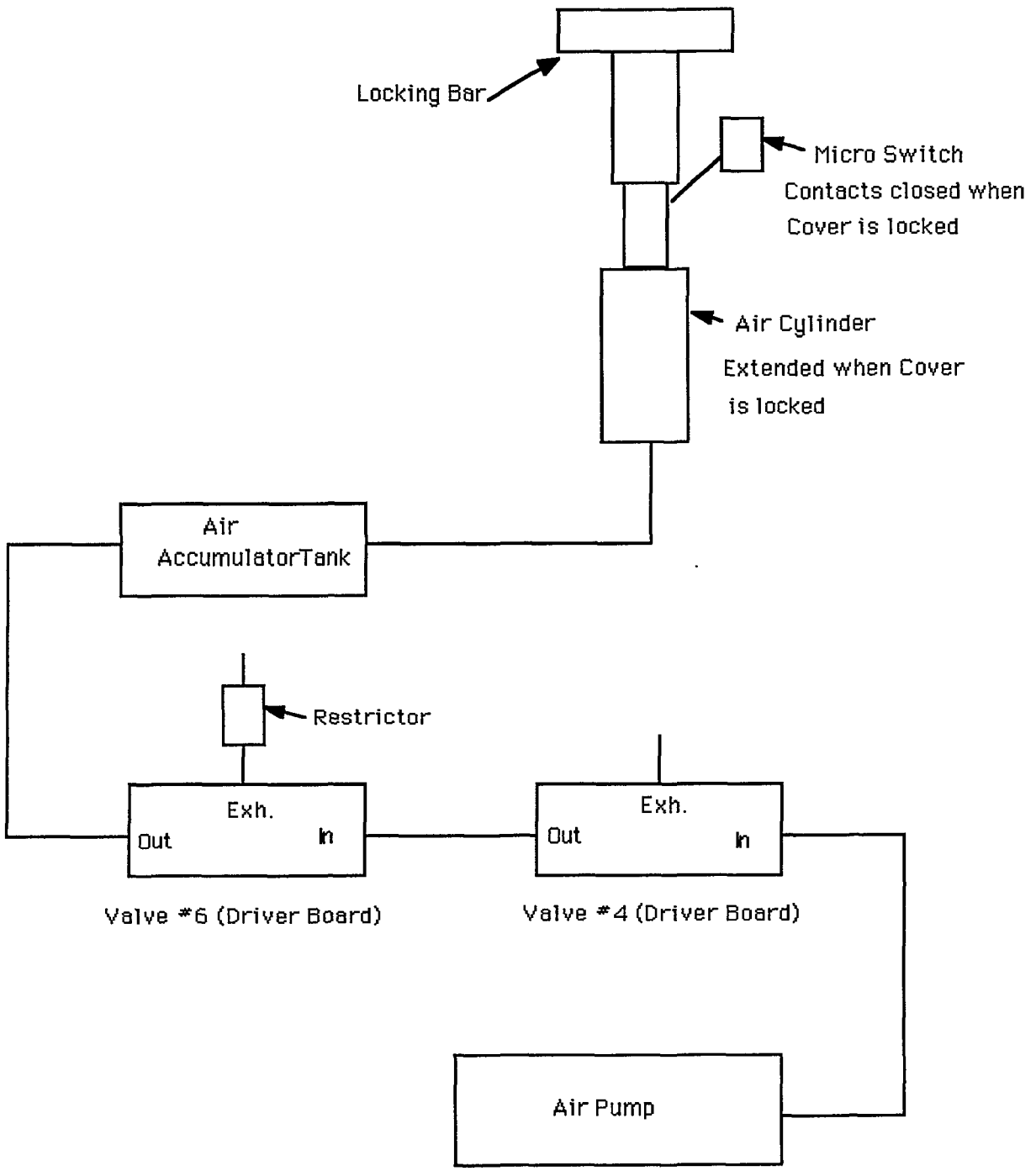

Figure 2-47, Centrifuge cover latch

5. When cover is closed cylinder extends and microswitch notifies computer that cover is now locked. Computer now starts centrifuge and begins processing blood.

6. Computer maintains the cover locked in position during centrifuge braking. It is only when centrifuge is fully stopped that it unenergizes valve #4.

7. The air cylinder and tank vent very quickly through the unrestricted exhaust port of valve #4.

8. The air cylinder retracts with almost no time delay and allows the cover to be opened.

Alternate Step 6. If power is lost during centrifuge operation the centrifuge will coast to a stop. To prevent the cover from opening, a power off time delay is designed into the cover lock.

When power is lost both valves #4 and #6 de-energize. With both valves off only the restricted exhaust outlet of valve #6 vents the accumulator tank and air cylinder. This prevents the cover from unlocking until approximately 10 seconds after power is lost.

2.8 CENTRIFUGE ASSEMBLY

(See Figure 2-40.)
The CS4 centrifuge assembly is a direct drive assembly in which a shaft rotates in ball bearings in an aluminum housing. The chuck is mounted to this shaft. Below the bearing assembly are two hall effect devices and an interrupter which reports the speed of the centrifuge to the main CPU and the motor control CPU. A DC driven light illuminates the area in which the centrifuge bowl rotates for easy operator monitoring. The assembly contains a cover latching mechanism which prevents accidental contact with the spinning bowl by the operator.

2.9 PUMP MOTOR GENERATOR ASSEMBLY

The CS4 contains a 24 volt DC motor and generator used for powering the roller pump assembly. The pump motor and generator rotate at 14 times the speed of the roller head. The speed reduction is accomplished in a gear box mounted to the front of the motor. This speed reduction is accomplished to increase torque and minimize "cogging" at low pump speeds.

Mounted to the rear of the motor is an interrupter disk which moves through a stationary hall effect device. While the generator provide signals to regulate speed with varying torques, the interrupter allows the computer to independently monitor the pump speed regulation.

The motor is connected to its drive through a switch on the pump housing. This switch insures that the pump head is closed whenever the pump is turning, safeguarding the operator.

2.10 AIR DETECTOR

The Cell Saver 4 monitors the fluid line into the centrifuge with an ultrasonic air detector. This detector monitors the PVC tubing to determine if it is filled with fluid or air. This allows the Cell Saver 4 to make the following determinations:

- Air Detection in Fill Mode -The reservoir has been emptied of fluid
- Air detection in Wash Mode - The saline bags are empty
- Air detection in Empty Mode - The contents of the centrifuge bowl have been emptied
- Air detection in Concentrate - The reinfusion bag is empty

The method of sensing fluid or air is measurement of the ultrasonic transmission if the PVC tubing and its contents. Refer to Figure 2-48. Crystals are placed on either side of the PVC tube. One crystal is driven at 3.0 MHz and is designated the Transmitter. It sends this frequency across the tubing and eventually the signal strikes the crystal on the opposite side designated the Receiver. This second crystal outputs a voltage waveform at the same frequency as the Transmitter and at a voltage level related to the attenuation properties of the tubing and it contents. Air passes very little signal compared to the energy coupled by a fluid filled tube. The level of the energy being received at the second crystal is examined and a determination of "fluid" or "air" is made. The device outputs a digital signal to the computer indicating air or fluid. Also a green LED on the front of the device indicates output.

The detector utilizes a custom hi-rel hybrid circuit to perform all functions and is not repairable. A 15-volt power supply is required to drive the assembly. Refer to Figure 2-49.

2.10 POWER SYSTEM

Refer to Figure 2-50 power system block diagram. The low leakage power cord is attached to the system through TB3. This terminal block allows for quick replacement of the cord without special tools. On/off control of the system and overcurrent protection is provided by CB1, which is mounted on the front of the CS4. The AC input voltage is then applied through J130 to the power supply interface board. This assembly allows adjustment for 120 or 230 volt nominal input voltage and distributes AC power through the system. It provides two isolated 110 volt outputs. One output drives the compressor, fans, and motor control. the other drives the switching power supply. Two isolated 110 volt sources are utilized to prevent inductive motor loads from sending transient signals into the electronic system and adversely affecting operation. The switching

power supply converts the AC voltage into highly regulated DC voltages of +5, +15, -15, and +24.

2.11.1 Transformer

Refer to Print 14253, transformer, in Chapter 8. This high power device provides isolation protection for the patient (<100 uA) and allows for operation at multiple line voltages.

It is constructed using two identical primary windings. These windings are placed in parallel for 120V operation and switched to series for 230V operation. This switching is performed on the power supply interface board.

The transformer is constructed with thermal fuses in series with the two primaries. Those non-resettable fuses protect the transformer from experiencing any dangerous thermal conditions. If either a defect in the transformer or a short on an output winding occurs, the transformer will start increasing in temperature. The thermal fuses are placed internally in the windings to sense this temperature rise and remove voltage to the input windings. Both fuses are not accessible and when opened render the transformer unoperational.

This transformer is constructed to meet all specifications of both UL544 and IEC - 601.

2.11.2 Power supply interface board

This board contains no active components. It simply allows switching of the primary leads of the transformer for 120/230 volt operation and distributes the secondary outputs to the system.

2.11.3 Switching power supply

The Cell Saver 4 utilizes a TODD MOV - 130 - 2415 switching power supply. Its input/output specifications are below:

AC Input 90 – 130 Vac 47-63 Hz

DC Output	*volts*	*amperes*
	+5 ± 1%	5
	+15 ± 1%	1.2
	-15 ± 1%	1.2
	+24 ± 3%	2.5 steady 5.0 amps peak

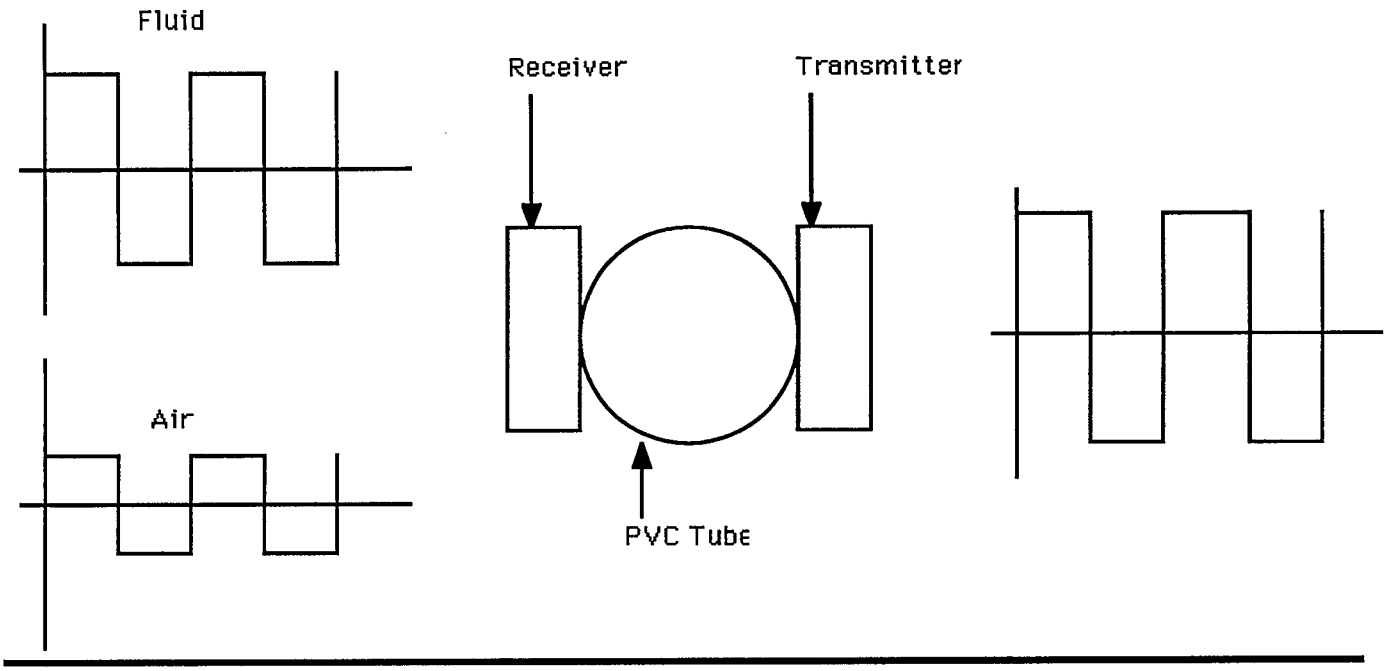

Figure 2-48, Ultrasonic transmission

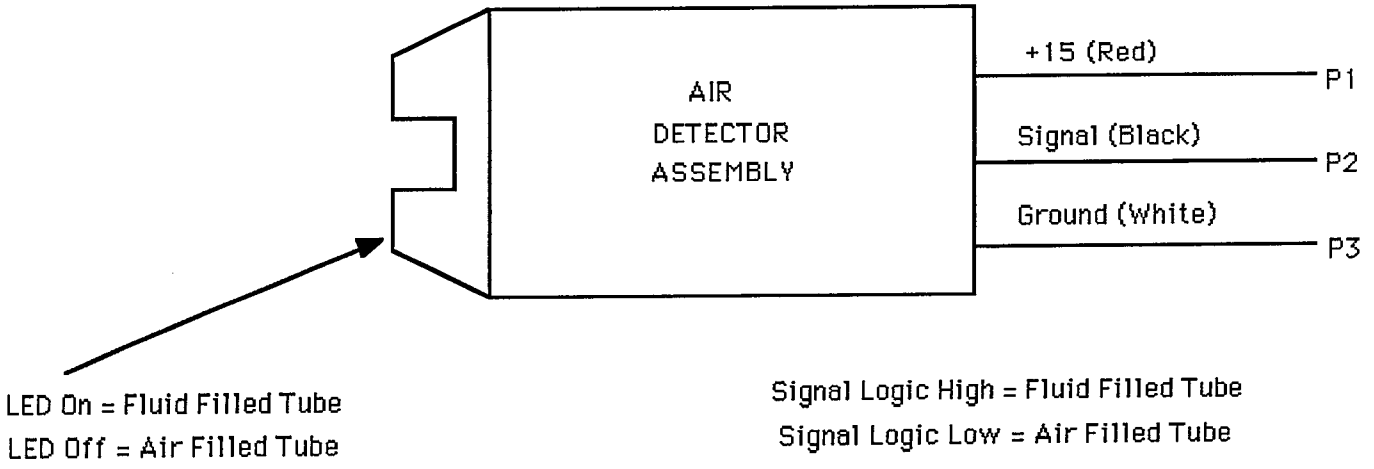

Figure 2-49 Air detector assembly

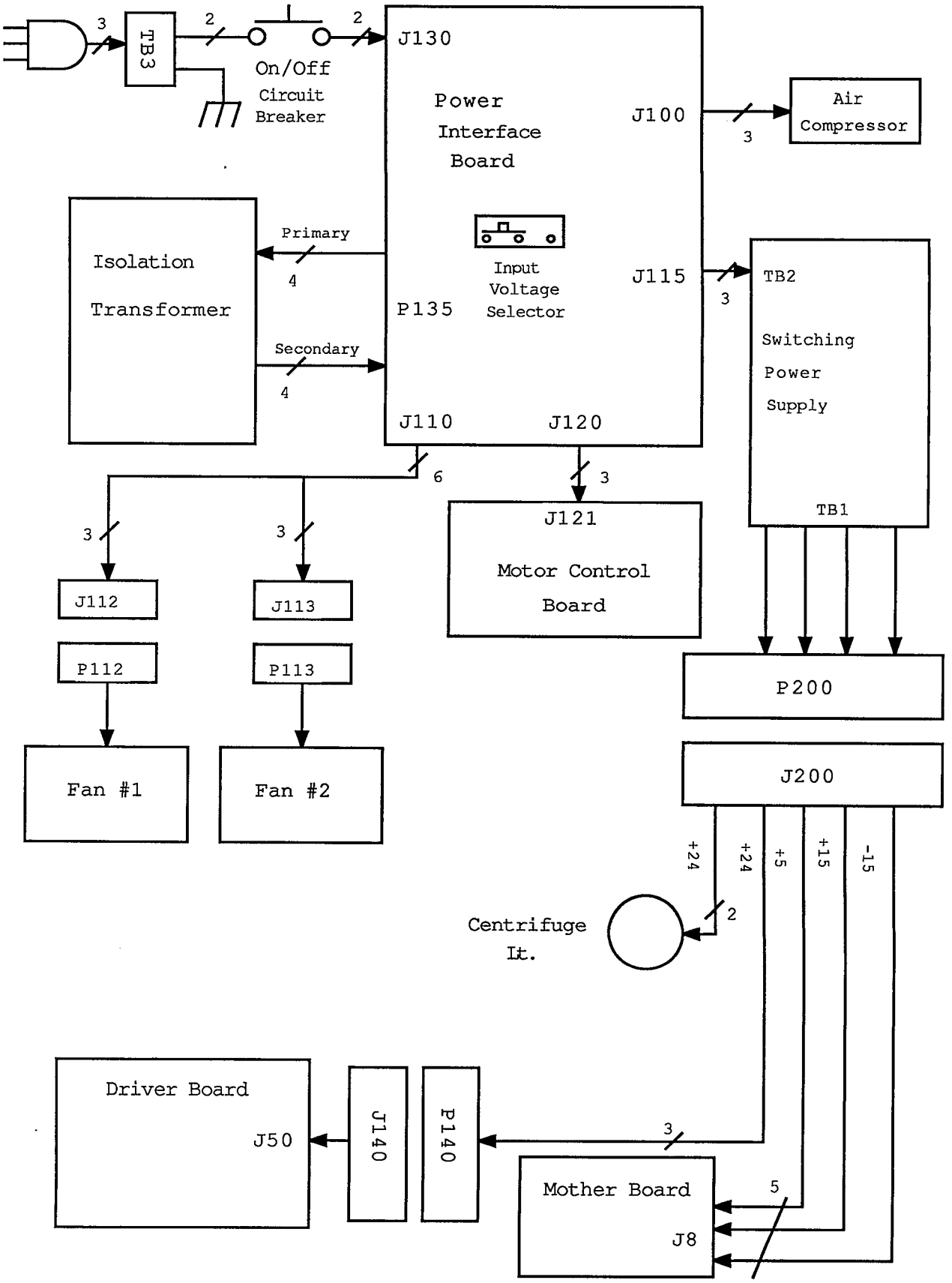

Figure 2-50, Power system block diagram

Ripple and noise: 0.2% RMS, 1% p-per 100 mv, whichever is greater.
Efficiency: 75% typical

The 5 volt power supply requires a minimum load of 20% to operate within specifications. This is the only output voltage to require loading for proper calibration. Always have the card rack attached when attempting to adjust the 5 volts in the system, If adjusting the power supply "on the bench" provide a resistor of 1.5 ohms at 20 watts for a load. The only voltage adjustment is the 5 volt output control potentiometer, VR1, located near the DC output terminal Block TB1.

If adjusting the supply "on the bench," set VR1 to provide 5.3 volts at pins 6 and 8.

If adjusting the supply in the system, set VR1 to provide 5.2 volts as measured at the Driver board. The supply can be measured at the Driver board by attaching the ground of a digital voltmeter to the ground pin located at the right front of the Driver board. Attach the positive lead to the front of R36 located to the right of the +5 volt green power indicator.

Chapter 3, Troubleshooting

Contents

Paragraph		Page
3.1	GENERAL	3-1
3.2	TROUBLESHOOTING	3-3
3.2.1	Raising deck for access	3-3
3.2.1.1	Inoperative machine	3-5
3.2.1.2	Display	3-10
3.2.1.3	Control panel	3-14
3.2.1.4	Weigher	3-16
3.2.1.5	Alarm beeper	3-17
3.2.1.6	Air detector	3-18
3.2.1.7	Valves	3-20
3.2.1.8	Cover latch	3-22
3.2.1.9	Roller pump	3-27
3.2.1.10	Centrifuge	3-33
3.2.2	Diagnostic LED indications	3-41
3.2.3	Diagnostic display messages	3-43

Figure		Page
3-1	Printed circuit board orientation	3-2
3-2	Deck raised for testing	3-4
3-3	Display panel ready for testing	3-12
3-4	Test pins on display power connection	3-13
3-5	Waveform during acceleration	3-35
3-6	Waveform indicating that the armature is disconnected	3-25
3-7	Motor control trigger signal	3-37
3-8	Motor control enable	3-37
3-9	Zero crossing signal	3-38

Table		Page
3-1	I/O printed circuit board status LEDs	3-42
3-2	CPU printed circuit board status LEDs	3-42
3-3	Motor control printed circuit board status LEDs	3-42
3-4	Driver printed circuit board status LEDs	3-43

In using the troubleshooting procedures in this chapter refer to Chapter 6 for detailed disassembly instructions. The Table of Contents for Chapter 6 is reproduced below for quick reference.

Contents

Paragraph		Page
6.1	DISASSEMBLY	6-2
6.1.1	IV pole	6-2
6.1.2	Centrifuge cover	6-2
6.1.3	Feed tube support arms	6-3
6.1.4	Control panel	6-5
6.1.5	Gas cylinder	6-6
6.1.6	Deck cover	6-6
6.1.7	Deck	6-6
6.1.8	Valves	6-7
6.1.9	Pump head assembly	6-7
6.1.10	Pump motor assembly	6-10
6.1.11	Motor generator	6-10
6.1.12	Optical switch	6-10
6.1.13	Pump cover switch assembly	6-11
6.1.14	Air detector	6-11
6.1.15	Centrifuge	6-11
6.1.16	Choke assembly	6-11
6.1.17	Motor plate assembly	6-14
6.1.18	Hall effect sensor assembly	6-14
6.1.19	Cover latch assembly	6-14
6.1.20	Centrifuge motor brushes	6-15
6.1.21	Cover latch air assembly	6-15
6.1.22	Optics assembly	6-16
6.1.23	Motor control pcb	6-16
6.1.24	Speaker assembly	6-16
6.1.25	O-ring removal and installation	6-17
6.1.26	Card cage printed circuit boards	6-17
6.1.27	Card cage	6-18
6.1.28	Transformer	6-19
6.1.29	Power supply interface pcb	6-21
6.1.30	Weigher	6-21
6.1.31	Power supply	6-21
6.1.32	Power switch	6-22
6.1.33	Fans	6-22
6.1.34	Air volume assembly	6-22
6.1.35	Compressor	6-22
6.1.36	Casters	6-22
6.1.37	Rear wheels	6-23

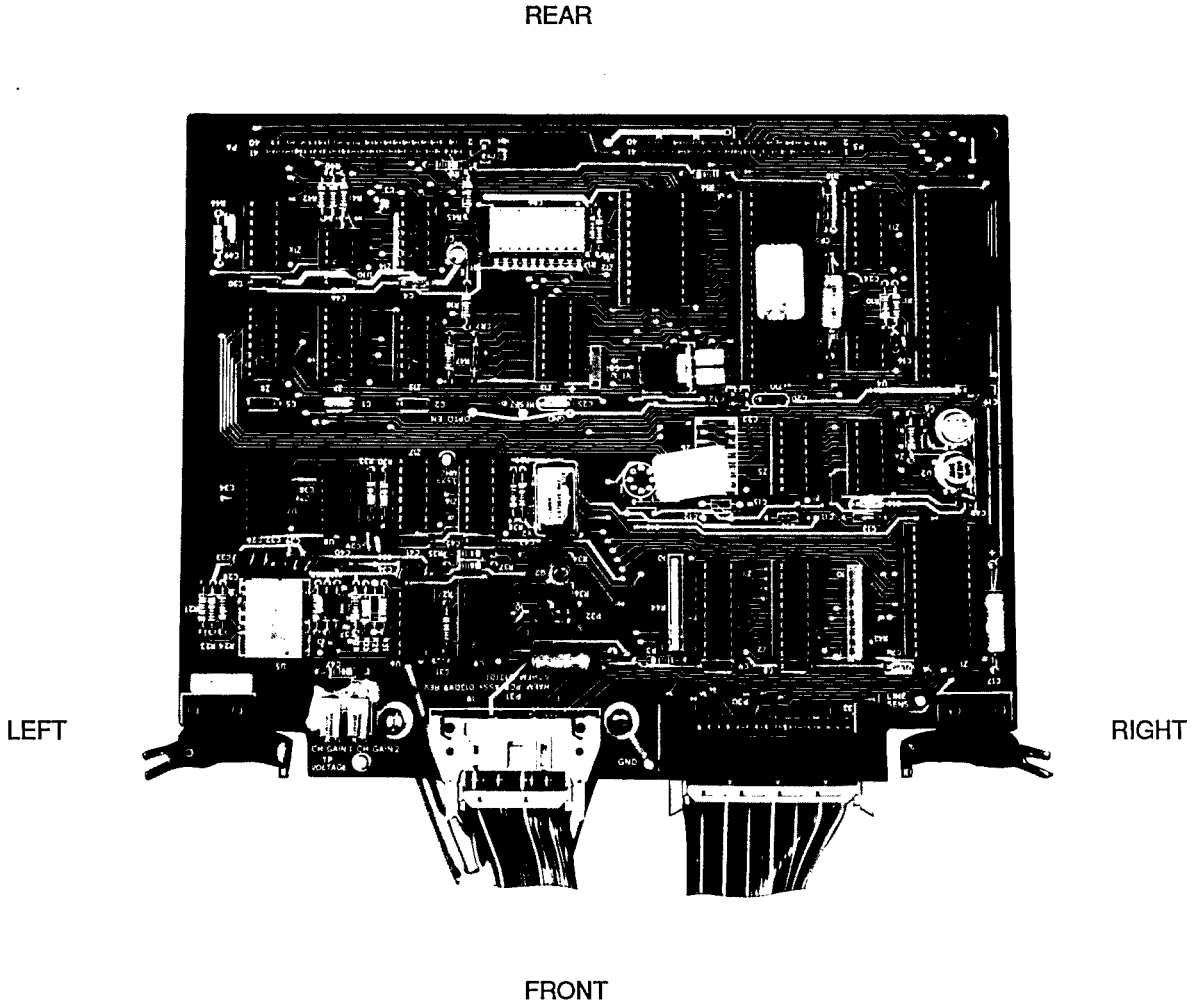

Figure 3-1, Printed circuit board orientation

3.1 GENERAL

This chapter provides procedures for identifying and correcting problems in the operation of the Cell Saver® 4. Some problems may require reference to the next chapter, Chapter 4, Software diagnostics for further isolation. To check a subsystem suspected of malfunction, refer to Chapter 5, System checkout.

Figure 3-1, above illustrated the printed circuit board orientation used in this manual. Shown are the terms front, rear, left, and right.

3.2 TROUBLESHOOTING

Malfunctions may appear in several ways. Usually there is a *symptom* of abnormal operation such as an unusual noise or excessive vibration. *Display messages* may accompany symptoms or they may be the only indication of a problem. Upon further investigation of a symptom or display message, you may discover that the *diagnostic LEDs* inside the cabinet indicate the source of the problem, or that the *software diagnostics* provide further information. Periodically, the *System Checkout* should be performed to assure that the system is performing as designed or to locate any potential problems.

However the problem manifests itself, use this Troubleshooting section or the next chapter, Software Diagnostics, to identify the malfunctioning component. Once a component is suspected of malfunction, refer to Chapter 5, System checkout, to perform further checks and to return the system to the factory specifications. If the component is found to be irreparable, refer to Chapter 6, Disassembly, and Chapter 7, Ordering Information, to remove and replace it.

3.2.1 RAISING DECK FOR ACCESS (See Figure 3-2.)

Deck support posts and a bracket are provided with each CS 4 so that the deck may be raised for troubleshooting. With this arrangement, complete operation of the system is possible while internal components are accessible. The following steps explain how to install the posts and bracket.

1. Remove the deck mounting screws, 3 on each side and 4 on the rear.

2. Remove the top of the IV pole and install the deck support bracket onto the pole. Rotate the bracket to avoid an obstruction with the deck cover.

3. Lower the handle assembly and the IV pole to their lowest positions.

4. Loosen the black centrifuge gasket and pry the gasket off.

5. Lift the deck straight up and swivel the support bracket into the deck stand holder so as to support the rear of the deck assembly.

6. Install the 2 deck support posts to the underside of the deck by screwing one threaded ends of the posts into the holes located on the left and right underside of the deck.

7. Lower the deck until these posts come to rest on the steps located on the inside of the cabinet on both sides.

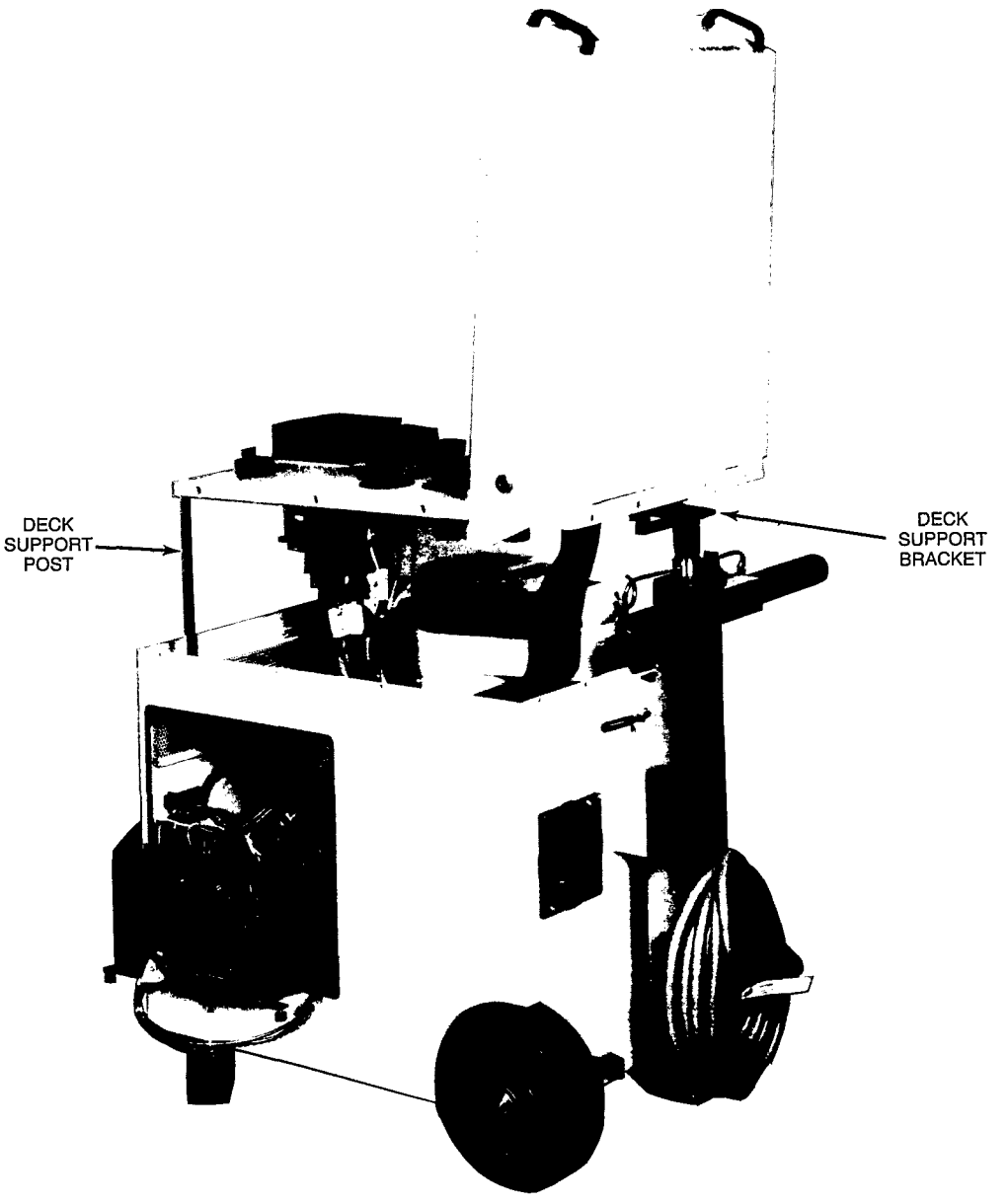

Figure 3-2, Deck raised for testing

3.2.1.1 Inoperative machine

Symptom A
Machine completely inoperative — no function at turn-on — no fan or compressor operation.

No fan or compressor operation indicates a loss of primary AC system power.

Step 1: Unplug the machine and examine the line cord and plug for damage.

Step 2: With the machine unplugged, remove the card rack access panel. Rotate the card rack out of the machine. Looking into the machine across the top of the card rack examine the position of the voltage selector switch. This switch is located on the power supply interface board and should be set to the appropriate voltage, either 110 or 220 volts.

Step 3: Place deck assembly on extension posts. Refer to section 3.2.1 for detailed instructions.

Step 4: Examine the following connections for proper insertion:

a. Power cord connection at TB3 which is located near weigher assembly.

b. Push-on terminals at rear of ON-OFF/circuit breaker.

c. J130 and P135 on power interface board.

Step 5: Place an AC voltmeter on TB3 pins 1 and 3. Plug in the AC cord; line voltage should be measured by the meter. If it is not the line cord or plug is defective.

Step 6: Unplug the machine and remove the two quick disconnects on the top of the ON-OFF/circuit breaker. Place the AC voltmeter on the open connections of the circuit breaker. Plug in the machine and turn on the circuit breaker. If line voltage is not measured on the meter the circuit breaker or its connection to TB3 is defective.

Step 7: Power off the machine and unplug J135 from the power supply interface board. This connector has 4 pins with two red and two blue wires. Place the AC voltmeter across pins 5 and 6 of the cable connector (red wires). Power up the machine. The AC meter should measure approximately 115 volts. If it

doesn't, go to Step 8. Power off the machine and move the probes to pins 1 and 2 (blue wires). Power on the machine. The meter should again read approximately 115 volts. If it does not, go to Step 8. If this test passes, replace the power supply interface board.

Step 8. Power off the machine and replace J135. Locate J130 on the power supply interface board. This connector is white and located near the middle of the board. Without unplugging the connector press probes from an AC voltmeter into the back of the connector at pins 7 and 12 (yellow/white and brown wires). Turn on the machine; the meter should measure line voltage if machine is set for 110 volts or one half line voltage is set for 220 volts. If this test fails, the power supply interface board is defective. Power off the machine and move the probes to pins 9 and 10 (gray/white and black wires). Perform the voltage test again. If this fails the power supply interface board is defective. If tests at pins 7 and 12 and pins 9 and 10 pass, and Step 7 fails, then the transformer is defective.

Symptom B

Machine inoperative — fan and compressor operating.

Fan and compressor operation indicates AC power system is functioning. Problem exists in the DC power supply or in the computer.

Step 1: Power off the machine and remove the card rack access panel. Rotate the card rack out of the machine. Remove the card retainer plate and check for proper insertion of the PCB's into the motherboard.

Step 2: Power on the machine and examine the 4 green indicators on the right front of the driver board. The driver board is the top board of the card rack. All four indicators should illuminate. If all indicators do not illuminate, go to Step 4, otherwise go to Step 3.

Step 3: Attach the negative lead of a digital voltmeter to the ground pin on the driver board. This pin is located at the front right of the driver board. Measure the power supply levels at the following points:

Driver PCB R36	+24.0 ±1.0	VDC
Driver PCB R42	+ 5.2 ±0.1	VDC
Driver PCB R43	+15.0 ±0.5	VDC
Driver PCB R44	-15.0 ±0.5	VDC

R36, 42, 43 and 44 are located at the extreme right front of the driver board at the LED indicators. Use the leg of the resistor near the front of the PCB. If all the power supplies are within specifications then the CPU or Expansion boards are defective. If any power supply voltage is inoperative or out of specifications go to Step 4.

Step 4: If a problem is found in one or more power supply voltages proceed via the following steps:

a. All voltage outputs (+5, +15, -15, +24) are inoperative (0 volts): Go to Step 5.

b. Any other incorrect power supply measurement found, perform Step 5, then jump to Step 12.

Step 5: Power down the system, remove the top deck and place it on extension posts. Refer to disassembly section 3.2.1 for detailed instructions.

Step 6: Place the probes of an AC voltmeter upon the power supply pins N and L of TB2. Refer to Figure 6-5 on page 6-9 for locations of the power supply. TB2 is the 3 pin terminal block at the top of the supply. Pins N and L are connected to white and black wires respectively.

Step 7: Power up the system, the voltmeter should measure approximately 115 Vac. If it does not the power supply Interface PCB or the related interconnections are defective. Go to Step 8. If the voltage is correct go to Step 12.

Step 8: Power down the system. Referring again to Figure 6-5 locate the Power Supply Interface PCB. Disconnect the 3 pin connector P115 located at the bottom of the board. Place the probes of an AC voltmeter in pins 1 and 2 of J115, the PCB side of the connector. Pins 1 and 2 are the two topmost pins of the connector.

Step 9: Power up the system, the voltmeter should measure approximately 115 Vac. If it does not go to Step 10. If the voltage is correct a fault exists in the cable connecting J115 to TB2 of the power supply.

Step 10: Power down the system and unplug J135 from the power supply interface board. This connector has four pins with two red wires and two blue wires. Place an ac voltmeter across pins 5 and 6 of the connector.

Step 11: Power up the system, the voltmeter should measure approximately 115 Vac. If it does not the transformer assembly is defective. If the voltage is correct the power supply interface PCB is defective.

Step 12: Power down the system and check P200/J200 for proper interconnection. This 12 pin cable to cable connector runs from TB1, the terminal block at the bottom of the power supply to the card rack assembly. Refer to Figure 6-5 for this connector's exact location.

Step 13: Disconnect P8 from the card rack's motherboard. P8 is a long, thin connector. Refer to Figure 6-5 for its exact location. Power up the system and observe the +24 volt indicator on the driver board. If it illuminates go to Step 18. If it doesn't go to Step 14.

Step 14: Power down the system and disconnect the two slide terminals that connect to the centrifuge lamp assembly. Refer to Figure 6-4 for its exact location. Power up the system and observe the +24 volt indicator in the driver board. If it illuminates the centrifuge lamp or its holder has a short and is defective. If the indicator does not illuminate go to Step 15.

Step 15: Power down the system and reconnect both slide connectors to the centrifuge lamp assembly. Disconnect P50 from the driver PCB. P50 is a three pin connector near the middle of the PCB which has 2 black and 1 red wires attached to it.

Step 16: Place the probes from a digital voltmeter on pins 1 and 2 of P50. The ground lead of the meter should go to pin 2. Connect the meter to the cable end of the connector not the PCB side. Power up the system and observe the meter. A measurement of 10 to 15 volts DC should be recorded by the meter. If this does not occur the D.C. power supply is not operational, go to Step 17. If this voltage is measured, go to Step 23.

Step 17: Power down the system and remove the fuse from the power supply. The fuse is located next to the three pin terminal block TB2 at the top of the power supply. Check the fuse for continuity with an ohmmeter. If the fuse is found to be open replace with a similar fast acting 3 amp device. If the fuse is functional the power supply is defective and should be replaced. If the fuse continues to blow after replacement the power supply is defective and should be replaced.

Step 18: Power down the system and reconnect P8 to the motherboard. Remove J140 from the card rack assembly. This a 24 pin connector which runs from the Driver Board to the rear of the card rack assembly. Refer to Figure 6-5 for exact location. Power up the system and observe the green indicators on the driver board. The +5, +15 and -15 indicators should illuminate. If they do go to Step 24. If these three indicators do not illuminate, go to Step 19.

Step 19: Power down the system and disconnect the 60 pin ribbon cable W9 from the card rack motherboard and reconnect J140. Refer to Figure 6-5 for exact locations of the connectors. Power up the system and observe the green indicators on the driver board. If all are illuminated a short exists in the front panel/ display assembly. If the indicators do not illuminate, go to Step 20.

Step 20: Power down the system and reconnect the ribbon cable W9 to the motherboard. Slide the CPU PCB approximately 1 inch out of the card rack. The CPU PCB is the next to the top PCB in the card rack. Power up the system and observe the green indicators on the driver PCB. If they illuminate a short exists on the CPU PCB and it should be replaced. If they do not all illuminate go to Step 21.

Step 21: Power down the system and reinstall the CPU PCB into the motherboard. Slide the expansion PCB approximately 1 inch out of the card rack. The expansion PCB is located below the CPU PCB. Power up the system and observe the three leftmost green indicators. If they do illuminate the expansion board has a short circuit and should be replaced. If they do not illuminate go to Step 22.

Step 22: Power down the system. Remove the two short ribbon cables which run from the driver PCB to the I/O PCB. Install the expansion on its extender board into the card rack. Ground a digital meter at the ground pin at the driver board. Slide the I/O PCB approximately 1 inch out of the card rack. The I/O PCB is the bottom Board of the card rack. Power up the system and check the following points on the expansion PCB with the meter:

P3-40	+ 5 Vdc
P3-36	+15 Vdc
P3-34	-15 Vdc

P3 is the connector at the right rear of the PCB. Refer to Figure 2-18 for the exact location.

If these readings are correct, a short exists on the I/O PCB and it should be replaced. If the readings are not correct a short exists in the motherboard and it should be replaced.

Step 23: Power down the system and reconnect P50 to the driver board. Disconnect the 10 pin ribbon cable J90 from the driver board, power up the system and observe the 24 volt indictor on the driver board. If it illuminates the centrifuge motor control PCB or W90 is defective and should be replaced. If the indicator does not illuminate the driver PCB is defective and should be replaced.

Step 24: Power down the system and reconnect J140. Disconnect the 9 pin connector P60 from the driver board. This connector is located at the left front of the driver PCB. Power up the system and observe the green indicators on the driver board. If they illuminate a short exists in the air detector or its connecting wiring. If the indicators do not illuminate go to Step 25.

Step 25: Power down the system and reconnect P60. Disconnect the 10 pin ribbon cable J90 from the driver board. Power up the system and observe the green indicators on the driver board. If they illuminate the centrifuge motor control PCB or ribbon cable W90 are defective. If the indicators do not illuminate, the driver board is defective and should be replaced.

3.2.1.2 Display

Symptom

Alphanumeric vacuum fluorescent display does not function correctly with remainder of machine operating normally.

Procedure

Step 1: Check display ribbon cable at card rack. (See Figure 3-3.)

a. Remove card rack access panel on side of cabinet

b. Loosen the two knurled screws holding card rack in place and rotate rack 90° out of cabinet.

c. At front end of card rack locate the 60-pin ribbon cable which runs from the top cover assembly. This cable is

shrouded in a black protective covering, is approximately 3 inches wide, and is held in place by a large strain relief assembly. Check for proper insertion of this cable into the mother board located also at the front of the card rack.

Step 2: Check power and connectors in top cover.

WARNING

High voltage exists on the display board assembly.

a. Remove the white shield that protects the wide, black 60-pin ribbon cable that runs from the cabinet to the control panel. This shield is attached with four small Phillips screws.

b. Remove the red control door by unscrewing the front hinge screws and loosening the back two. Then move hinges aside and lift off the door. Remove the back two hinge screws and hinges and place the hardware aside.

c. Remove the control panel by unscrewing the two inboard screws while supporting the panel. Tilt the control panel forward at the bottom and the top lip will slip away from the cover. Carefully lay the display assembly on the centrifuge cover.

d. Check the 60-pin main ribbon cable (W9) insertion into membrane switch assembly.

e. Check the 26-pin display signal ribbon cable (W12) and 3-pin power connector (W11) for proper insertion into the display assembly and membrane switch assembly.

f. Using digital voltmeter check the power supply voltage at the filter capacitor on the membrane assembly. Refer to Figure 3-3. Voltage should be 5.0 volts ±0.1 volts. If no voltage is found and other machine operations function correctly then the 60-pin ribbon cable (W9) or its connectors are defective.

g. Using a digital meter check the power supply voltage to the display assembly. Refer to Figure 3-4. If no voltage is present then 3-pin power cable (W11) is defective.

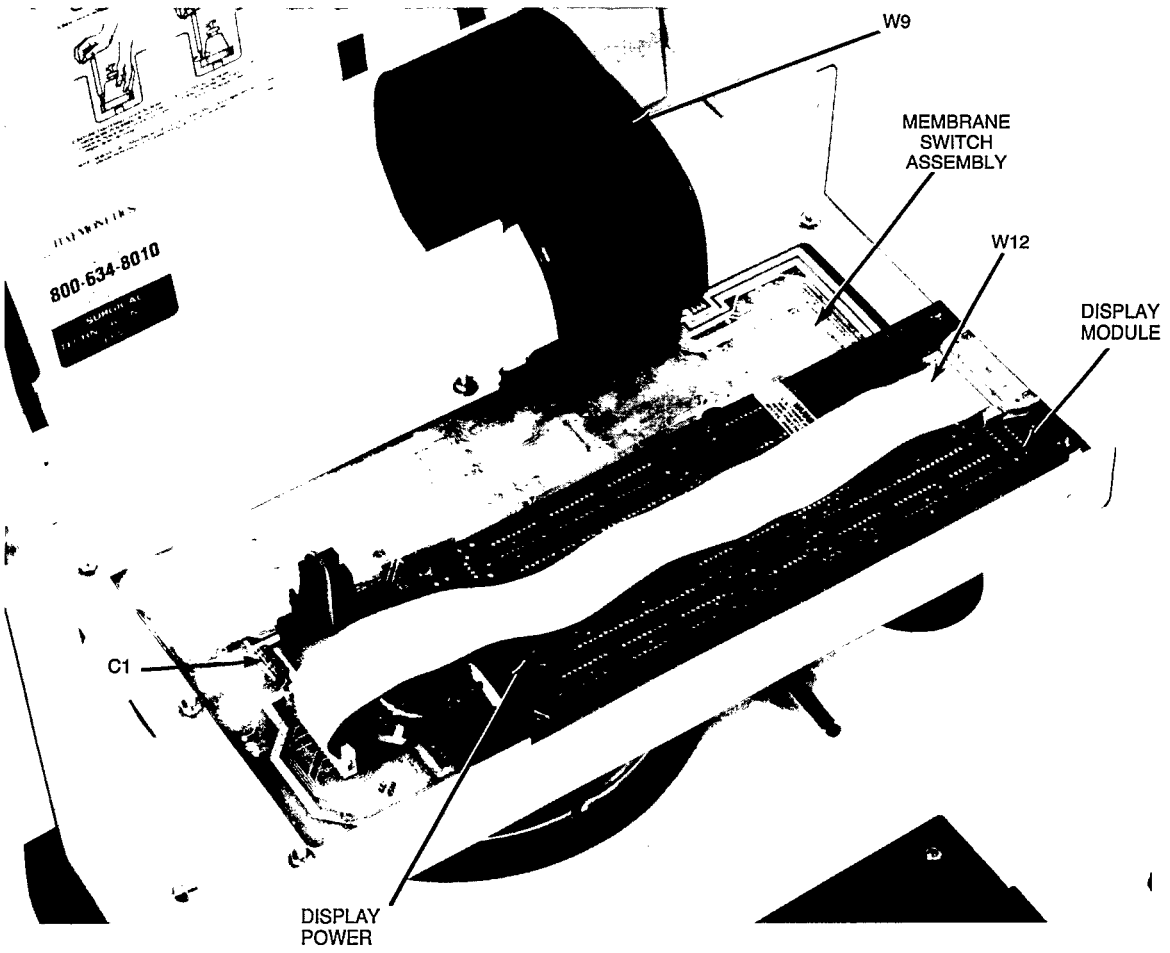

Figure 3-3, Display panel ready for testing

Step 3: Check display. Remove the 26-pin ribbon cable (W12) at the display assembly. Attach one end of a small clip lead to the negative (–) end of filter capacitor, C1, on the membrane assembly. Slide the other end of the test lead onto pin 2 of the display signal connector. You are clipping onto the connector attached to the display pcb not the ribbon end.

Note: On the connector housing will be found an arrow. This arrow points to pin 1 of the connector. The connector is numbered with odd pins on one side 1, 3, 5, 7, etc. and even on the other side 2, 4, 6, 8, etc.

Power up machine and observe display. Functioning display module will cycle through complete character set. If display fails this test then replace display assembly.

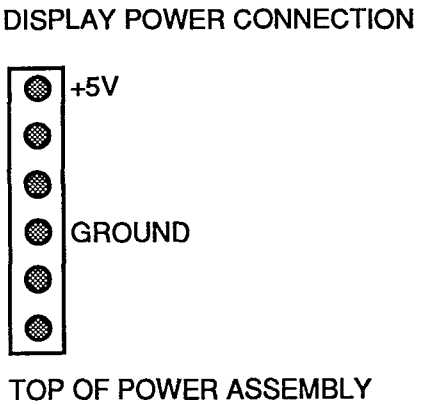

Figure 3-4, Test pins on display power connection

Step 4: Check signal continuity.

a. Remove the 60-pin ribbon cable checked in Step 1 from the mother board. Free the cable from its strain relief and position for testing. With an ohmmeter check for continuity the following cable pathways. Start by measuring from the previously disconnected end of the 26-pin cable (W12) to the end of the 60-pin cable (W9) near the card rack.

W12 (26 pin)	*W9 (60-pin)*	*Signal Name*
6	46	RD
10	47	WR
8	48	A0
12	30	Data 0
14	29	Data 1
16	28	Data 2
18	27	Data 3
20	26	Data 4
22	25	Data 5
24	24	Data 6
26	23	Data 7
1, 4	59, 60	GND

If an open is found then proceed to localize to W12, W9 or membrane assembly pcb.If interconnections pass this test then replace CPU board in card rack.

3.2.1.3 Control panel

Symptom

Control Panel and Display both non-operational; short beep heard from computer upon power-up.

Procedure

Step 1: Check ribbon cable at card rack.

a. Remove card rack access panel on side of cabinet.

b. Loosen the two knurled screws holding card rack in place and rotate rack 90 out of cabinet.

c. At front end of card rack locate the 60-pin ribbon cable (W9) which runs from the top cover assembly. This cable is shrouded in a black protective covering, is approximately 3 inches wide, and is held in place by a large strain relief assembly. Check for proper insertion of this cable into the mother board located also at the front of the card rack.

Step 2: Check power and connectors in top cover.

a. Remove the white shield that protects the wide, black, 60-pin cable that runs from the cabinet to the control panel. This shield is attached with four small Phillips screws.

b. Remove the red control door by unscrewing the the two front hinge screws and loosening the back two. Then move the hinges aside and lift off the door. Remove the back two hinge screws and hinges and place the hardware aside.

c. Remove the control panel by unscrewing the two inboard screws while supporting the panel. Tilt the control panel forward at the bottom and the top lip will slip away from the cover. Carefully lay the display assembly on the centrifuge cover.

d. Check the 60-pin main ribbon cable (W9) insertion into membrane switch assembly.

e. Using a digital voltmeter check the power supply voltage to the filter capacitor on the membrane assembly. Refer to Figure 3-2. Voltage should be a 5.0 volts ± 0.1 volts. If no voltage if found and other machine operations function correctly then the 60-pin ribbon cable (W9) or its connectors are defective.

Step 3: Check signal continuity

Disconnect the 60-pin ribbon cable (W9) at both the card rack and membrane panel assembly. With an ohmmeter check the cable continuity. Replace cable if any opens are found.

Note: On the connector housings will be found an arrow. This arrow points to pin 1 of the connector. The connector is numbered with odd pins on one side 1, 3, 5, 7 to 59, and even pins on the other side 2, 4, 6, 8 to 60.

If the cables pass the continuity check then change the CPU board in the card rack.

Final checkout of the membrane panel can be performed by use of software diagnostics, Section 4.7.9.

Symptom
Control panel inoperative, all other functions of system operation including display.

Procedure

Step 1: The control panel is arranged in an electrical matrix of rows and columns to minimize interconnection requirements. The CPU board scans this matrix for a closure. If a closure is found, no further input is received until the initial signal is removed. Therefore a physically damaged membrane panel or twisted top cover could prevent all keyboard operation. Inspect the membrane for any indication of impact, replace if found. Also inspect the top cover assembly. If the cover is significantly bent the membrane panel could be distorted and creating a constant closure. Correct this condition if found.

Step 2: Repeat steps 1, 2 and 3 in control panel and display non-operational procedure. (Previous section.)

3.2.1.4 Weigher

Symptom
Weigher not operational or out of calibration.

Procedure

Step 1: Enter the diagnostic mode by pressing the trap switch on the CPU board.

Step 2: After the initial display of the checksum is complete press the start auto process button. The second line of the display will now show the digitized weight number. The initial number displayed should be between 0 and 25. If the reading is not, jump to step 5.

Step 3: Hang a 5 lb. weight on the weigher, the display reading should follow the following formula:

Reading = (weight in lbs. x 7) + initial reading ± 4
= 35 + initial reading ± 4.
If reading is not correct jump to step 5.

Step 4: Hang a 10 lb. weight on the weigher. The display reading should be:

Reading = 70 + initial reading ± 7.
Weigher system is OK is readings at 0, 5, 10 lb are within specifications.

Passing this test indicates correct weigher operation.

Step 5: Using digital meter measure voltage from TP5 to TP11 on the expansion pcb in the card rack. This is the excitation voltage for the weigher load cell and should be between 9.9 and 10.1 volts. Replace the expansion board if not within specifications and redo steps 1–4.

Step 6: Check the following connectors for proper insertion.

a. J33, a D shell connector located at the front left of the expansion board.

b. J140, a 24-pin connector located at the rear top of the card rack.

c. J35, a 6-pin connector located near the weigher load cell assembly.

Step 7: a. Remove J33 from the rear of the expansion board.

b. Using a digital ohmmeter measure from pins 1 to 2 of the cable connector. This measures the output resistance of the bridge load cell. You should receive a reading of 350 ohms ±5 ohms without any weight on the weigher plate.

c. If the reading is correct replace the expansion board and repeat steps 1-4.

d. If the reading indicates an open the fault could be in the load cell or an interconnection. First check the continuity of the connectors mentioned in step 6 and if correct replace the load cell. Then repeat steps 1-4.

e. If the reading is near 350 ohms but not within the ± 5 ohms (example 275 ohms) then replace the load cell and repeat steps 1-4.

If all of the above steps check out but the weigher calibration is still inaccurate, then the mounting or assembly of the bag weigher/load cell may be faulty. Refer to the disassembly procedures for the bag weigher (6.1.30).

3.2.1.5 Alarm beeper

Symptom No audio tone upon power-up. All other functions operational.

Procedure

Step 1: Check the following connectors:

a. Two quick disconnect terminals located near the speaker. Note: the speaker assembly is located on the rear of the air filter enclose and can be accessed through card rack opening.

b. 24-pin connector J140 located at front top of card rack.

c. Terminal block TB-4 located on base of cabinet.

Step 2: Clip oscilloscope probes on rear of speaker assembly and view waveform upon machine turn-on. A multi-frequency 2 volt peak to peak signal should be viewed. Replace speaker assembly if signal is present.

Step 3: Using an extender board probe C17+ on the I/O board. The same signal described in step 2 should be present at turn-on. If not replace I/O pcb.

Step 4: Remove the I/O extender board and reinstall the I/O board and ground at the right rear of the driver board. Place the scope probe into the rear of J60-3 without removing the connector form the board. Upon turn on the same 2.5 volt signal should be seen. If not replace the J30 ribbon cable from the driver to the I/O board.

3.2.1.6 Air Detector

Symptom A: Air detector fails power up test.

The computer requires the air detector to demonstrate its ability to generate an air signal whenever the system is turned on. If the detector does not signal air upon turn-on then the display indicates CHECK AIR DETECTOR and no further operation is allowed until air is signaled. If a fluid filled tube is present in the detector upon power-up this safety will prevent operation until the tube is removed.

Symptom B: Air detector does not correctly signal air or fluid.

Step 1: Remove any tubing in the air detector and power on the system. The small green LED on the air detector should not be on. If it is the detector is defective and must be replaced.

Step 2: Install a short length of fluid filled tubing into the detector. This should cause the green LED to illuminate. If it is not, jump to step 5.

Step 3: With the fluid filled tube in place and the green LED on, press START AUTO PROCESS. Allow the pump to run for a minimum of 18 revolutions.

Step 4: Remove the fluid tubing and observe machine function. The

display should indicate Reservoir Empty. Reinstall the tubing and press START AUTO PROCESS. The pump should restart in a few moments and run continuously. Passing this step indicates correct air detector operation.

Step 5: Check the following connections for proper insertion:

a. P205, a 3-pin connector located near the rear of the air detector,

b. P140, a 24-pin connector located at the rear top of the card rack.

c. P60, a 9-pin connector located at the left front of the driver board.

d. TB4 a terminal block located at the middle on the bottom of the cabinet.

Step 6: Using a digital meter you should observe the voltage from pins 1 to 3 of the 3-pin connector P205. It should be 15 volts ±1 volt. (Pin 1 is +15 volts; pin 3 is ground.) If the voltage is not present check the continuity of the connectors listed in step 5. If the voltage is within specification and the detector still does not pass step 2, replace the air detector.

Step 7: Using an oscilloscope observe the air detector signal from TP1-3 on the left rear of the driver board to the ground lug at the right rear of the driver board. The signal should be a logic high with fluid in the detector and a logic low with air in the detector. If the detector passes this step and steps 1 and 2 then the failure is most likely in the connectors and cables listed in step 5.

Step 8: Using an extender board observe with an oscilloscope the signal at Z15 pin 9 of the I/O board. It should be the same as described in step 7. If not the ribbon cable W30 from the driver to the I/O is defective.

Step 9: Observe Z15 pin 8 on the I/O board. It should be a logic high when there is fluid in the detector. When air is in the detector the signal should be a continuous pulse train. If it is not, replace the I/O board.

Step 10: Reinstall the I/O board into the rack and place the CPU board

on its extender. Observe Z8 pin 18 on the CPU. If its signal is high with fluid in the detector and a pulse train with air in the detector, and the system does not pass steps 3 and 4, replace the CPU board.

3.2.1.7 Valves

Symptom A Single valve inoperative all other valves and functions operational.

Step 1: Establish name of inoperative valve.

On the top of each valve is a color dot denoting its functions and assisting in loading of the color coded disposable:

Valve Location	*Color*	*Function*
Front	red	FILL
Middle	blue	EMPTY
Rear	yellow	WASH

Step 2: a. Open side access door and rotate out card rack assembly.

b. On the front right of the I/O board locate the status LED indicators.

c. Power up the system and after initialization is complete press the Pause/Resume button to enter the load mode.

d. Examine the 3 left-most valve LED indicators on I/O board. All three should <u>not</u> illuminate when the load function is activated and all three should illuminate when the load function is deactivated. Replace the I/O board if one more LED's do not function.

Step 3: Ground an oscilloscope on the right front of the Driver Board. Examine IC Z2 inputs as shown below:

	Load Activated (Valves Open)	Load Deactivated	Valve Affected
Z2-1	Logic High	Logic Low	WASH
Z2-2	Logic High	Logic Low	EMPTY
Z2-3	Logic High	Logic Low	FILL

If this test fails, replace W30, a ribbon cable which runs from the I/O to the Driver Board.

Step 4: With the oscilloscope still grounded to the Drive Board examine the outputs of IC Z2 using the following information:

	Load activated (Valves open)	Load deactivated (Valves closed)	Valve affected
Z2-18	1.2 to 1.7 volts	24 volts	WASH
Z2-17	1.2 to 1.7 volts	24 volts	EMPTY
Z2-16	1.2 to 1.7 volts	24 volts	FILL

If this test fails replace Driver Board Assembly.

Step 5: a. Locate the pneumatic quick disconnects which connect the pinch valves to the air control valves. These connectors are found through the card rack access port with the card rack rotated out. Look up and to the right for the color coded pneumatic lines.

b. Disconnect the Red line, power up the machine and activate the LOAD mode by depressing the pause/resume button. Air should be felt at the connector when LOAD is activated and not felt when LOAD is deactivated. If it is not, jump to step 6.

c. With load activated reattach the quick disconnect. This should cause the related pinch valve to open. If it does not, replace the pinch valve assembly.

d. Reconnect the red line and test the blue and yellow lines in a similar manner.

Step 6: If air is not felt during LOAD at the quick disconnect then the air control valve has failed.

a. Locate the control valves on the right of the Driver Board. Remove the appropriate colored tube that exits the valve and card rack. The color of the tube has been determined by the color of the tube that failed in step 5.

b. Activate LOAD and air should exit the port on the valve that has had the tube removed from it in Step a.

c. If no air exits the valve during LOAD, replace the Driver Board. If air does exit the valve, check the interconnecting tubing for a leak. If no leak is found replace the related pinch valve assembly.

Symptom B: All valves inoperative

This failure indicates a defective compressor, major air leak, or loss of the 24 volt power supply.

Step1: Remove the card rack access door and rotate out the card rack.

Step 2: Attach the ground of a digital voltmeter to the ground lug at the right front of the driver board. Attach the positive lead to the rear of R36. This resister is next to the +24 LED which is at the right front corner of the driver board. Use the end of the resistor which is nearest to the front and the +24 legend on the pcb.

Step 3: Power up the system and enter the LOAD mode by depressing the Pause/Resume switch after initialization is complete. The digital meter should read +24 ±1 volt. If it is not, there is most likely a defect in the power supply or interconnections. Refer to Power Supply section.

Step 4: Power down the system and disconnect one of the black plugs on the pneumatic bus bar located on the right side of the Driver board.

Step 5: Connect a pressure gauge to this exposed pneumatic barb. Power up the system and observe the pressure gauge reading. The gauge should measure to a minimum of 25 PSI. If this test passes, then refer to Symptom A for detailed electrical troubleshooting. If this test fails go to Step 6.

Step 6: Check for leaks in the Driver board, air connector assembly and orange interconnecting tubing. If no leaks are found, replace the air compressor assembly.

3.2.1.8 Cover latch

Symptom A: Machine displays "CLOSE CENTRIFUGE COVER" when cover is closed, or "ERROR 10" upon activation of centrifuge.

Step 1: Remove the card rack access door and rotate out the card rack.

Step 2: Locate the status LEDs on the right rear of the I/O board.

Step 3: Power up the system and after initialization is complete examine the LED indicators. The 4th LED from the left is the main control valve to the cover latch mechanism. This LED should be ON. The 6th LED from the left is the slow release valve and should be OFF. If this test fails replace the I/O board.

Step 4: Close the centrifuge cover and press the Start Auto Process button. The 4th and 6th LEDs from the left should be extinguished. If this test fails replace the I/O board.

Step 5: a.) Power down the system and disconnect one of the black plugs on the pneumatic bus bar located on the right side of the Driver board.

b.) Connect a pressure gauge to this exposed pneumatic barb. Power up the system and observe the pressure gauge reading. The gauge should read a minimum of 25 PSI.

c.) If this test fails, check for leaks in the Driver board, air connector assembly, and orange interconnecting tubing. If no leaks are found, replace the air compressor assembly. If test b passes, go to Step 6.

Step 6: a.) Power down the system. Remove the green tubing which is connected to an air control valve on the Driver board.

b.) Power up the system, and after initialization, press the START AUTO PROCESS button. Air should exit the valve at the port the green tubing was removed from. IMPORTANT!—check for air at the valve—<u>not</u> at the tubing. If air does not exit the valve, replace the Driver board. If this test passes, go to Step 7.

Step 7: a) Power down the system and replace the green line. Remove the top deck and place on extension posts. (Refer to Disassembly Section for detailed instructions.)

b) After placing the deck on its extension posts disconnect the green tubings quick disconnect located near the rear of the centrifuge. Connect a pressure gauge to this line.

c) Power up the system and press Start Auto Process. Examine the pressure gauge it should be a minimum of 25 PSI. If it is not there is a leak in the green tubing, reservoir tank or connectors.

d) Power down the system and reconnect the green quick disconnect line. Locate the cover lock air cylinder which is located at the rear of the centrifuge. Do not be confused with the black cylinder used to cushion the cover's opening and closing. The lock cylinder is silver and is attached to a black delrin block which rides in a molded channel of the centrifuge assembly.

e. Power up the system; close the centrifuge cover and prepare to observe the cover latch air cylinder and its black Delrin block. Press START AUTO PROCESS and observe the black block ride up into the centrifuge assembly. The cylinder should extend the block vertically approximately 1/2 inch. If the cylinder is properly extending, go to Step f.

If the cylinder is not extending, check for proper alignment of the Delrin block between the molded channel rails on the centrifuge assembly. If the block is not between these rails, loosen the cover latch assembly from the centrifuge and rotate the block until it is correctly positioned. Retighten the cover latch assembly to the centrifuge.

If the block is found to be properly in position and step e tests are not successful, replace the cover latch air cylinder. It is defective. Refer to section 6.1.21 for detailed instructions.

Note: A small inspection mirror may be used to make the block's movement easier to observe.

f. Power down the system and disconnect the 4-pin connector, J67, at the rear of the centrifuge connected to the cover latch mechanism, Connect the leads of an ohmmeter to pins 1 and 3 of the female connector, J67, which is the portion of the cable connected to the cover latch mechanism.

Power up the system close the centrifuge cover, and press START AUTO PROCESS. The cylinder should extend and at the end of its throw it should activate the attached microswitch. Examine the ohmmeter; it should indicate closure of the switch (0 ohms).

If it does not, the switch is either out of adjustment, or defective. If this test fails, go to Step 8. If this test passes, go to Step 9.

Step 8: a. Power down the system. Disconnect the green air line and remove the two screws which hold the cover latch assembly to the centrifuge.

b. Remove the two screws which hold the microswitch to the cover latch assembly.

c. Connect the leads of an ohmmeter to pins 1 and 3 of J67. With the switch unactivated, the ohmmeter should read 0 ohms. Press the switch leaf gently by hand. A click should be heard and the ohmmeter should indicate an open circuit. If these two readings are not correct, replace the micro-switch. If these two conditions are correct, go to Step d.

d. Reinstall the microswitch onto the cover latch assembly but do not tighten the screws completely. The holes in the cover latch assembly which these screws pass through are oversized and allow adjustment of the switch's position. Reconnect the ohmmeter in the same manner as Step C.

The switch should be positioned so that 0 ohms is measured only when the cylinder is pulled to its extreme extension point. Tighten the screws mounting the microswitch when this position is found. If the microswitch cannot be properly positioned, replace the microswitch.

Step 9: a) Power down the system and reconnect J67 at the rear of the centrifuge. Ground an ohmmeter at the right rear of the driver board. Disconnect P64 and place the other probe on the female connector P64–8. This is the side of the connector attached to the cable not the PC board connector. With power off, the pin (J64-8) should show continuity with ground. If it is not, then a problem exists in the connections between the card rack and the centrifuge lock assembly. Check the following connections for continuity:

From	*To*
P64-8	J140-8
P140-8	P67-2
J67-2	J67-4
P67-4	TB4-1
TB4-1	TB4-5
TB4-5	P140-9
J140-9	P60-9

P64 is the 9-pin cable connector that attaches to the right front of the driver board.

P140 is the 24-pin cable connector that attaches to the driver board.

J140 is the mating half of P140 which attaches to a bracket on the card rack assembly.

J67 is the connector which attaches to the cover latch assembly.

P67 is the mating half of J67 which attaches to the main harness.

TB4 is the terminal strip at the base of the cabinet.

P60 is the cable side of the 9-pin connector that attaches to the left front of the Driver board.

b. Continue to ground the digital meter on the driver board. Move the other lead to J64, pin 5. Power up the system, close the centrifuge cover and press Start Auto Process. The meter should now show J64 - 5 has continuity to Ground. If it does not, a connection is defective. Power down the system and check the following connections for continuity:

From	*To*
P64-5	J140-7
P140-7	P67-1
P67-3	TB4-2
TB4-2	TB4-5

Step 10: Power down the system and place the I/O board on its extender and place the probe on Z1 pin 8. Power up the system, close the centrifuge cover and press Start Auto Process. Z1 pin 8 should show a constant logic low; if it does not replace the ribbon cable W31. Move the probe to Z1 pin 7. This signal also should show a logic low. Again, if it doesn't, replace W31. If this test passes replace the I/O board, Z1 is defective.

3.2.1.9 Roller pump

Symptom A Roller Pump does not turn; all other functions normal. Machine displays < open + close cover > message.

PROCEDURE:

Step 1: Turn off power to system and open the platen of the roller pump. Remove any tubing and inspect the platen area for foreign material such as dried blood or plastic debris. Clean the assembly if required. The pump head can be removed by loosening the two hex head screws found on the top surface of the assembly.

Step 2: Using a large, flat blade screwdriver, loosen (counterclockwise) the screw located in the center of the roller assembly. The roller assembly is the portion of the pump which turns. This screw is captive and should be turned only until removal of the assembly can be accomplished. Inspect this assembly for any foreign material. The four rollers should turn freely on their shafts. Clean this assembly if required.

Step 3: Reinstall the pump head and roller assembly. If cleaning was found to be required, then power up the system and check for proper operation.

Step 4: Power down the system. Remove the card rack access panel and rotate out the card rack.

Step 5: Remove the roller pump connector (J40) to the driver board. The driver board is the top board located in the card rack and J40 is a 4-pin connector located at the left side of the board.

Step 6: Place an oscilloscope ground at the right side of VR3 on the driver board. VR3 is located approximately 1.5 inches behind the J30 ribbon cable connector and directly in front of the 3 pin connector J50. On the opposite side of VR3 place the scope probe. Adjust the scope for auto trigger, 10 volts per division, and 500 milliseconds per division.

Step 7: Power up the system and initiate pump operation by pressing Fill. The oscilloscope should display approximately 24 volts for 1 to 1.5 seconds and then return to zero.

If the wave form does not correctly appear, the the card rack or power supply is causing the malfunction. Go to

Step 8. However, if the wave form is correct, either the pump motor or the interconnections between the driver board and the motor are defective. Go to Step 13.

Step 8: Power down the system and reconnect J40 on the driver board. Power up the system and examine the status of the four green LED indicators located at the front right of the driver board. These display the status of the 4 supply voltages and all should be illuminated. If not, then refer to the power supply section.

Step 9: Locate the pump enable indicator on the driver board. This is a small red indicator between the two ribbon cable connectors. The red LED at the left of the indicator block labeled BPEN is the desired device. Press Fill and examine the LED. It should illuminate after the button is pressed. If it does not, either the I/O board or ribbon cable is defective. Go to Step 10. If the LED operates correctly, go to Step 11. Note: Because the motor is not turning, the CPU enables the output for 1 to 1.5 seconds. Therefore, the LED will be on for only 1 to 1.5 seconds.

Step 10: Locate the LED indicator at the back of the I/O board. The I/O board is the bottom board in the card rack. The LED which is second from the right indicates enabling of the roller pump. This LED should be on after fill is pressed. If its operation is correct and Step 9 failed then the ribbon cable W30 is defective. If the LED does not operate correctly, then replace the I/O board.

Step 11: Attach the ground lead of the oscilloscope to the ground pin on the driver board. This pin is located at the front right of the driver board. Attach the probe of the scope to the side of R2 nearest the front on the driver board. R2 is located just to the right of the AC adjustment pot. Set the scope to auto trigger, 0.1 volts per division and 500 milliseconds per division. Power up the system and press fill. The scope should display a signal that steps to approximately 300 millivolts and then resets to zero. If it does not, either the I/O board or ribbon cable W30 are defective. If this test fails go to Step 12; if it passes replace the driver board.

Step 12: Power down the system and place the I/O board on an extender board. Attach the ground lead of the oscilloscope to the ground pin of the I/O board. This pin is located between the two ribbon cable connectors. Attach the scope probe to the left side of C13. C13 can be found in front of

Z5 at the right center of the board. Set the scope to auto trigger, 500 millivolts per division and 500 milliseconds per division. Power up the system and press fill. The scope should display a signal that steps to approximately 1 volt and then resets to zero. If it does and Step 11 failed, then the ribbon cable W30 is defective. If the scope does not measure the correct valve replace the I/O board.

Step 13: Power down the system. Remove the top deck and place on extension posts. (Refer to Disassembly Section for detailed instructions.) Check the following connections for proper insertion:

a) J140: A 24-pin connector located at the rear of the card rack.

b) J270: A 9-pin connector attached to the pump motor.

c) P36: A 3-pin connector attached to the pump cover switch.

Step 14: Detach P36 and place the probes of an ohm meter on the male pins of J36. This is the end connected to the pump switch. The meter should read approximately 3 ohms with the pump door closed and open circuit with the door open. If it does not, the switch mechanism is not operating correctly. Go to Step 16.

Step 15: Reconnect J36 and disconnect J270. Connect the negative lead of a 24 volt power supply to the male pin no. 1 of P270. This is the connector attached to the motor assembly. Connect the negative end of the power supply to Pin No. 3 of P270. Turn on the supply and observe the pump motor. It should turn rapidly. If it does not, replace the pump motor. If it does, the connectors between the driver board and P270 are defective.

Step 16: Adjust the pump cover switch:

a) Close and latch the pump assembly. From the front of the Cell Saver 4, the switch mechanism can be seen in front of the pump motor coupling and consists of a switch, shaft, spring and adjustment disk.

b) Using a small pair of needle noise pliers, grasp the shaft through the spring. Loosen the nut directly above the adjustment disk while preventing the shaft from turning with the

pliers. Turn the adjustment disk until the switch is heard to click. Continue to turn the disk after the click for an additional 1/4 turn. Being careful to prevent the shaft from turning, tighten the nut to hold the disk in place.

c) A click from the switch should now be heard when the pump cover is opened and again when the cover is closed.

d) Repeat the continuity check previously performed in Step 14. If this test fails again, check the wiring connections of the pump cover switch and associated resistor R1 (3 ohms),located on the bottom of the deck to the right of the pump mechanism. If a problem cannot be found in the wiring, replace the switch.

SYMPTOM B:
Pump turns less than one revolution and stops. Machine displays < Open & Close Pump > message.

PROCEDURE:

Step 1: Check pump for foreign material per preceding procedure Steps 1 through 3.

Step 2: Remove the card rack access door and rotate out the card rack.

Step 3: Check J62 on the driver board for proper insertion. J62 is a 3-pin connector and located directly behind the ribbon cable connector J30.

Step 4: Power down the system and attach the ground clip of a volt meter to the ground pin at the right front of the driver board. Attach the voltmeter's positive probe to the TP1-1 test point. TP1 can be found at the left front of the driver board.

Step 5: Set the meter to DC volts and power up the system. Rotate the roller pump manually, observing the meter readings. Rotating the pump should show transitions from 0 volts to +5 volts. If this test passes, the fault is in the card rack assembly, go to Step 9. If this test fails, the fault lies in the pump counter switch, connecting wiring, or LED current source. Go to Step 6.

Step 6: Power down the system and remove J62 from the driver board. Attach the ground of a current meter to the ground pin of the driver board. Connect the positive lead of the meter to Pin 1 of J62 on the driver board. Power up the system and observe the

meter reading. The meter should measure 20-25 milliamperes. If it does not, replace the driver board. If this passes, go to Step 7.

Step 7: Power down the system and check the following connections for continuity:

P62-1	to J140-14	(BRN/RED)
P62-2	J140-15	(BLK)
P62-3	J140-16	(WHT/BRN)
P140-14	J270-5	(BRN/RED)
P140-15	J270-6	(BLK)
P140-16	J270-7	(WHT/BRN)

P62 is a 3-pin connector which attaches to the driver board. It is the cable end of the connector pair.

J140 is a 24-pin connector that attaches to the driver board.

P140 is the other half of the 24-pin connector which is attached to a bracket on the card rack assembly.

J270 is a 9-pin connector attached to the pump motor assembly. It is the half that goes to the main harness, not directly to the pump.

If all connections pass, then replace the optical switch assembly located at the rear of the pump motor. If any connection fails this test, repair and recheck pump operation.

Step 8: Power down the system and place the CPU board on an extender board. Attach the ground lead of a voltmeter to the ground pin on the right front of the driver board. Attach the positive lead to Z17 Pin 13 on the CPU board. Z13 is on the right side of the CPU board and aligned with the middle row of integrated circuits.

Step 9: Set the meter to DC volts and power up the system. Rotate the roller pump manually observing the meter readings. Rotating the pump should show transitions from 0 volts to + 5 volts. If this test passes, replace the CPU board. If this test fails, the problem lies in the interconnections from the driver board. Refer to Figure 2-28, Pump Counter flow chart, for further information.

Symptom C: Roller pump spins rapidly for 1 to 2 seconds then stops. All other functions operational. Display indicates < open & close pump>.

Procedure:

Step 1: Attach the ground lead of the oscilloscope to the ground pin on the driver board. This pin is located at the front right of the driver board. Attach the probe of the scope to the side of R2 nearest the front on the driver board. R2 is located just to the right of the AC adjustment pot. Set the scope to auto trigger, 0.1 volts per division and 500 milliseconds per division. Power up the system and press fill. The scope should display a signal that steps to approximately 300 millivolts and then resets to zero. If it does not, either the I/O board or ribbon cable W30 are defective. If this test fails go to Step 2; if it passes go to Step 3.

Step 2: Power down the system and place the I/O board on an extender board. Attach the ground lead of the oscilloscope to the ground pin of the I/O board. This pin is located between the two ribbon cable connectors. Attach the scope probe to the left side of C13. C13 can be found in front of Z5 at the right center of the board. Set the scope to auto trigger, 500 millivolts per division and 500 milliseconds per division. Power up the system and press fill. The scope should display a signal that steps to approximately 1 volt and then resets to zero. If it does and Step 1 failed, then the ribbon cable W30 is defective. If the scope does not measure the correct valve replace the I/O board. If this test passes go to Step 3.

Step 3: Power down the system. Remove the top deck and place on extension posts. (Refer to Disassembly Section for detailed instructions.) Check the following connections for proper insertion:

a) J140: A 24-pin connector located at the rear of the card rack.

b) J270: A 9-pin connector attached to the pump motor.

c) P36: A 3-pin connector attached to the pump cover switch.

Step 4: Attach the ground clip of a voltmeter to the side of R4 towards the front of the driver board. R4 is located to the left of J50, the 3-pin connector. Attach the positive lead of the meter to the rear of R4.

Step 5: Set the meter to DC volts and power up the system. Press FILL and observe the meter reading. The meter should measure 5.5 to 6.0 volts until the pump stops. If the measurement is correct, replace the driver board.If the measurement is not correct, go to Step 6.

Step 6: Power down the system and locate J270. J270 is a 9-pin connector attached to the pump motor. Without disconnecting J270, press voltmeter probes into the back of the connector. The ground should go to Pin 4 and the positive lead to Pin 3. These are the Green and Black wires respectively.

Step 7: Power up the system and press Fill. The meter should measure 5.5 to 6.0 volts until the pump stops. Be careful to make adequate contact with the voltmeter probes onto the connector pins. If this test fails, replace the pump motor and recalibrate its operation. If this test passes, then the interconnection between J270 and J40 on the driver board is defective. Check the following connections for continuity:

J40-3	J140-12	(ORN-BLK)
J40-4	J140-13	(ORN-GRY)
P140-12	J270-3	(ORN-BLK)
P140-13	J270-4	(ORN-GRY)

3.2.1.10 CENTRIFUGE

Symptom A Centrifuge does not turn; all other functions normal with fans operational. Machine displays Error 4 message.

PROCEDURE:

Step 1: Power down the system and remove the centrifuge bowl if installed. The centrifuge should turn freely. If it does not a mechanical defect exists and the centrifuge assembly should be replaced.

Step 2: Remove the card rack access panel and rotate out the card rack.

Step 3: Remove the top deck and place on extension posts. Refer to disassembly section 3.2.1 for detailed instructions.

Step 4: Locate the centrifuge motor control printed circuit board, located inside the C.S.4 next to the card rack assembly. Refer to Figure 6-4. Check for proper insertion of J1. J1 is

the connector which has a red and white twisted pair wire. Place the probes of an oscilloscope on CR8 of the centrifuge motor control PC board. The ground of the oscilloscope should go to the side of the diode at the top of the board. Set the oscilloscope to normal internal positive trigger, 50 volts per division and 2 ms per division.

Step 5: Power up the system and depress the FILL button. Compare the oscilloscope to the waveform shown in Figure 3-5. If this waveform is present and the centrifuge is not turning, then the centrifuge coupling is defective. Repair or replace if necessary.

If the waveform shown in Figure 3-6 is observed instead, then the motor armature is not receiving power. Go to Step 6.

If no voltage is seen at CR8 then go to Step 10.

Step 6: Power down the system and swap relay K1 and K2 on the centrifuge motor control printed circuit board. Power up the system and observe the main display. If an error 6 should be displayed then the relay that is now at position K2 is defective and should be replaced. If error 4 is again displayed, go to Step 7.

Step 7: Power down the system and remove the centrifuge assembly. Refer to Section 6.1.6. Check the slide terminals that connect the choke assembly to the centrifuge motor.

Step 8: Using an ohmmeter check the impedence of the choke assembly. This device should measure less than 1 ohm. Replace the choke if a higher valve is measured.

Step 9: Remove the centrifuge motor's brushes. Refer to procedure 6.1.11 for detailed instructions. Inspect the brushes for damage or excessive wear. Replace all four brushes if any one brush is found to be less than 1/4-inch long. If the brushes are found to require replacement then reinstall the centrifuge and recheck operation. If the brushes are found to be acceptable then replace the centrifuge assembly.

Step 10: Power down the system and ground an oscilloscope to the ground pin of the driver board. The driver board is the top board of the card rack and the ground pin is located at the front right of the board next to the green indicators. Observe Z3 pin 9. Change the oscilliscope vertical sensitivity

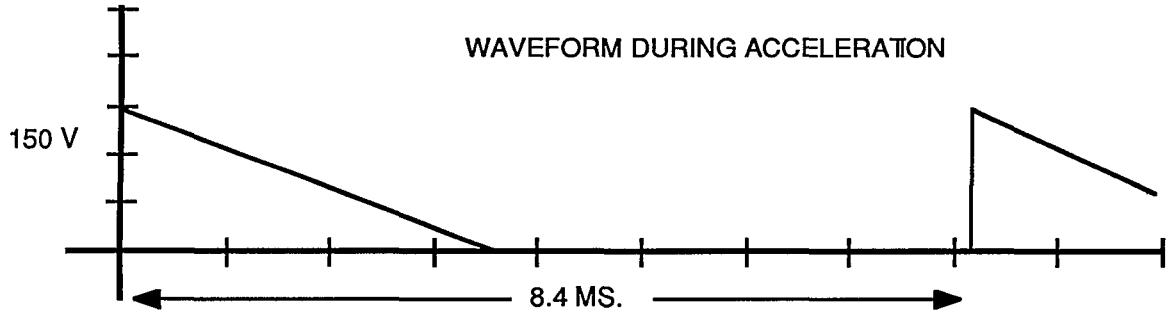

Figure 3-5, Waveform during acceleration

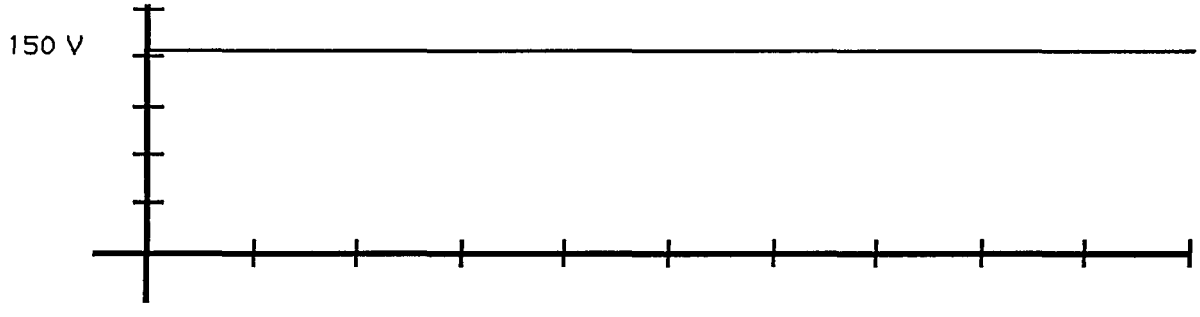

Figure 3-6, Waveform indicating that the amature is disconnected

to 1 volt per division. Power up and observe the oscilloscope. The wave form shown in Figure 3-7 should be observed.

Move the oscilloscope probe to Z3 pin 14 and change its trigger to auto. Press FILL and observe the waveform. It should match Figure 3-8. If these waveforms are correct then the ribbon cable W90 or the centrifuge motor control

board are defective. Go to Step 13. If these waveforms are not observed to to Step 11.

Step 11: Observe Z3 pins 11 and 6 for the same signals respectively as was seen in Step 10 for Z3 pin 9 and 14. If these signals are observed then the driver board is defective and should be replaced. If these signals are not seen then the I/O board or ribbon cable J31 are defective. Go to Step 12.

Step 12: Power down the system and place the I/O board on its extender. Power up the system and observe the signals at Z10 pin 14 and Z18 pin 37. They should be the same as observed in Steps 10 and 11, if they are, then the ribbon cable W31 is defective and should be replaced. If the signals are not observed then the I/O board is defective and should be replaced.

Step 13: Check ribbon cable W90 pins 4, 7, 9, and 10. If continuity is not found the cable is defective and should be replaced. If the cable passes this test and Step 11 failed, then replace the centrifuge motor control PCB.

Symptom B: Centrifuge does turn; machine displays Error 4 message.

PROCEDURE:

Step 1: Power down the system. Remove the card rack access panel and rotate out the card rack.

Step 2: Inside the cabinet directly to the right of the card rack opening is the centrifuge motor control PC board. Directly below the ribbon cable that attaches to this board is a 4-pin connector J2. This connector can be accessed through the card rack opening. Check this connector for proper insertion.

Step 3: Power down the system and ground an oscilloscope to the ground pin of the driver board. The driver board is the top board of the card rack and the ground pin is located at the front right of the board next to the green indicators. Power up the system, do not depress any of the function buttons. On the Driver board, observe Z3 pin 15 while the centrifuge is spun by hand. Pin 15 should provide one pulse for every rotation of the centrifuge. If it does not, go to Step 6. If this test passes, go to Step 4.

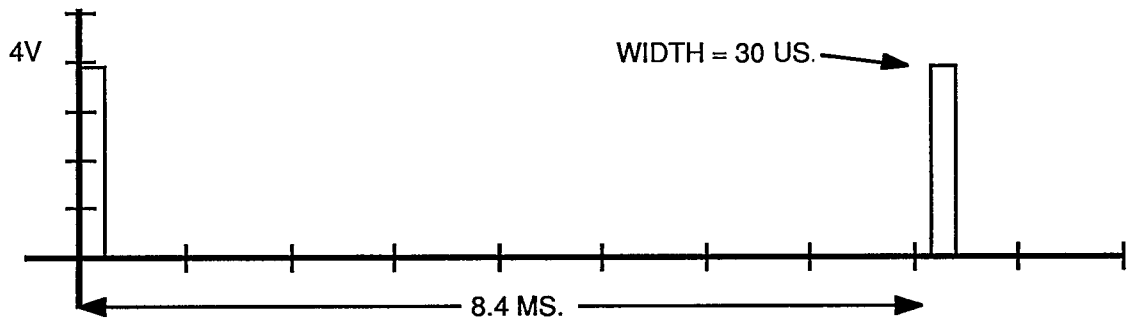

Figure 3-7, Motor control trigger signal

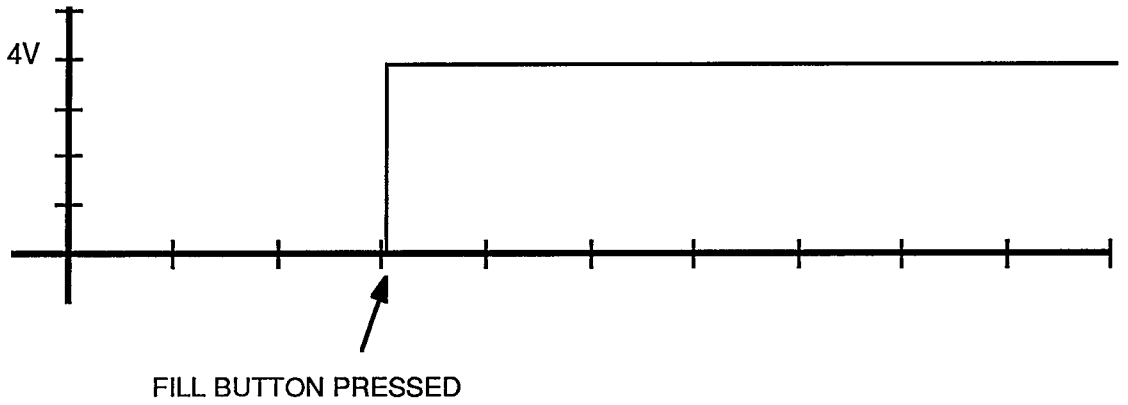

Figure 3-8, Motor control enable

Step 4: Observe Z3 pin 5 on the driver board. This pin should provide the same signal seen in Step 3. If it does not then replace the driver board it is defective. If this test passes, go to Step 5.

Step 5: Power down the system and place the I/O board on its extender. Power up the system and observe Z10 pin 6 on the I/O board. This pin should provide the same signal seen previously as the centrifuge is rotated by hand. If it does not, the ribbon cable W31 is defective and should be replaced. If this test passes, then the I/O board is defective and should be replaced.

Step 6: Check the ribbon cable W90 for continuity for pins 3, 8, 9, and 10. If proper continuity is not found replace W90. If continuity is correct the centrifuge spindle Hall effect sensor or cable are defective.

SYMPTOM C:

Centrifuge does not turn; all other functions normal, machine displays Error 6 message.

PROCEDURE:

Step 1: Power up system and check for operation of system fans. If fans are functional go the Step 2. If fans are not operational, a defect has occurred in the 110 volt/6 amp secondary of the isolation transformer (Blue wires), its connector J135 or the power control PC board. Go to Step 19.

Step 2: Power down the system. Remove the card rack access panel and rotate out the card rack.

Step 3: Attach the ground lead of an oscilloscope to the ground pin of the driver board. The driver board is the top board of the card rack and the ground pin is located at the front right of the board next to the green indicators.

Step 4: Attach the oscilloscope probe to Z3 pin 4 on the driver board. Power up the system. The signal shown in Figure 3-9 should be observed. If it is not go to Step 7. If the signal is correct, go to Step 5.

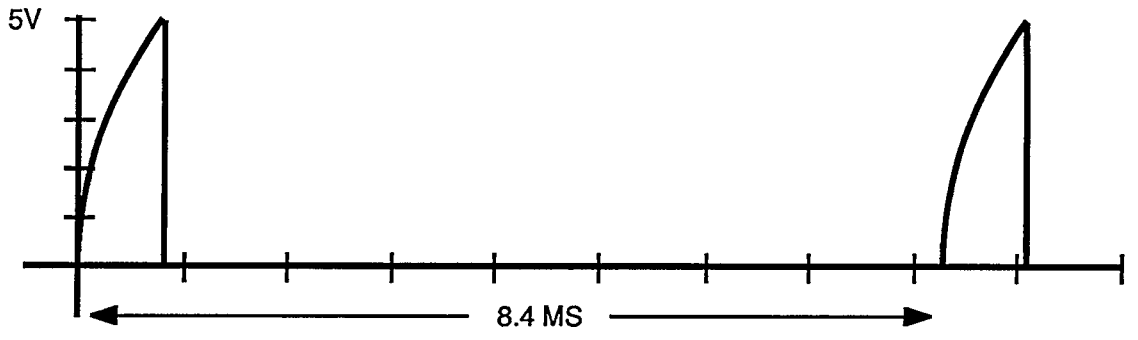

Figure 3-9, Zero crossing signal

Step 5: Observe Z3, pin 16 on the driver board. This signal should be the same as that observed in Step 4. If it is not replace the driver board, it is defective. If the signal is correct, go to Step 6.

Step 6: Power down the system and place the I/O board on its extender. Power up the system and observe Z10 pin 6 on the I/O board. This signal should be the same as seen in Steps 4 and 5. If it is not then the ribbon cable W31 is defective and should be replaced. If the signal is correct, replace the I/O board, it is defective.

Step 7: Remove the top deck and place on extension posts. Refer to disassembly section 3.2.1 for detailed instructions.

Step 8: Power up the system and observe the centrifuge motor control PC board. This board is located on the inside of the cabinet next to the card rack assembly. After power up the Red overspeed LED on the motor control PC board should be illuminated. If it does, go to Step 9; if it doesn't, go to Step 12.

Step 9: Power down the system and attach an AC voltmeter across VR1 on the centrifuge motor control PC board. VR1 is the large red disk varistor the center of the board. Set the voltmeter on a 200 VAC scale. Power up the system and observe the meter reading. If the meter measures 110 to 130 VAC then replace the centrifuge motor control PCB, it is defective. If it doesn't, go to Step 10.

Step 10: Power down the system and swap K1 and K2 on the centrifuge motor control board. Power up the system and after initialization press START AUTO process. If Error 6 is displayed, go to Step 11. If Error 4 is now displayed replace the relay that is now at position K1, it is defective.

Step 11: Power down the system and remove P121 from the motor control board. It is a 3 pin connector with a white, black and green/yellow wires. Attach an AC voltmeter to pins 1 and 2 of the cable connector (white and black wires). Adjust the voltmeter to the 200 VAC scale and power up the system. If 110 to 130 volts AC is measured, then replace the centrifuge motor control PC board. It is defective. If the voltage is not observed, then the cable from J120 on the power control PC board to J121 of the centrifuge motor control board is defective.

Step 12: Using the oscilloscope probe, examine Z3 pin 12 on the driver board. After power up and initialization this signal should go to a logic high (>3.5 volts). If it does, go to Step 13. If this signal is incorrect, go to Step 14.

Step 13: Power down the system and check the ribbon cable W90 for continuity of the following pins; pin 6, 9, 10, 13. If W90 fails this test, replace the cable. If W90 passes this test, the centrifuge motor control board is defective, replace it.

Step 14: Using the oscilloscope, examine Z3 pin 8 on the driver board for a logic high after power up and initialization. If this signal is not observed to to Step 15. If this signal is correct, the driver board is defective, replace it.

Step 15: Using the oscilloscope examine pin 6 of P6 on the I/O board which should still be installed on its extender. P6 is one of the two motherboard connectors and is numbered with odd pins on one side and even on the opposite row. The signal observed should be the same as expected in Steps 12 and 14. If it is not, go to Step 17. If the signal is correct go to Step 16.

Step 16: Power down the system and remove the I/O board from the extender. Using an ohmeter check for continuity from P6 pin 6 to P31 pin 8 of the I/O board. If continuity is not found replace the I/O board. If continuity is observed, replace the ribbon cable W31. It is defective.

Step 17: Remove the I/O board extender and replace the I/O board into the card rack. Place the CPU board onto its extender. Power up the system and examine with an oscilloscope Z7 pin 36 on the CPU board. This signal should be a logic high after power up and initialization. If this signal is incorrect replace the CPU board. It is defective. If this signal is correct, go to Step 18.

Step 18: Power down the system and remove the CPU from its extender. Using an ohmmeter check continuity from Z7 pin 36 to P2 pin 40. P2 is one of the two motherboard connectors. If continuity is correct the motherboard is defective; replace it. If continuity is not found, replace the CPU board, it is defective.

Step 19: Power down the machine. Remove the top deck and place on extension posts. Refer to Section 3.2.1 for detailed instructions.

Step 20: Unplug J135 from the Power Supply Interface board. This connector has 4 pins with two red and two blue wires. Place an AC voltmeter across pins 1 and 2 of the cable connector. IMPORTANT!—be sure to take measurement on wire side of the connector pair. Power up the machine. The AC voltmeter should measure approximately 110 volts. If this test fails, replace the transformer assembly. If this test passes go to Step 21.

Step 21: Power down the machine and reconnect J135 on the Power Supply Inteface board. Disconnect the 6-pin connector J120. Place the probes of an AC voltmeter on pins 1 and 2 of J120. IMPORTANT!—be sure to take the measurement on the PCB side of the connector pair. Power up the machine. The AC voltmeter should measure approximately 110 volts. If this test fails, replace the power supply interface board. If this test passes, the cable from J120 of the Power Supply Interface board to J121 of the centrifuge motor control board is defective.

3.2.2 DIAGNOSTIC LED INDICATIONS

There are a variety of diagnostic LEDs located on printed circuit boards within the CS4 cabinet. Green LEDs which indicate that power is present are located on the CPU, Driver, and Centrifuge Motor Control pcbs.

Table 3-1 shows the significance of the various LEDs in the group located over larger ribbon cable on the I/O board, and Table 3-2 explains the functions of the CPU status LEDs. Table 3-3 identifies the Centrifuge Motor Control LEDs and Table 3-4 identifies the Driver LEDs.

The LEDs may be used to determine which side of the circuit has the problem: the half from the control panel to the output side of the I/O printed circuit board, or the half from the I/O printed circuit board to the component. For example, if you look at the Status LEDs on the I/O pcb while pressing the PAUSE/RESUME switch, you should see LEDs 1 through 3 illuminate. If they do not, then the signal to open is not being sent to the valves, and the problem is in the part of the circuit before the Status LEDs. (The next step would be to check the CPU and I/O boards, etc.)

Table 3-1
I/O printed circuit board status LEDs

LED no.*	Indication when illuminated
1	Wash valve closed
2	Empty valve closed
3	Fill valve closed
4	Cover lock open
5	Not used
6	Cover lock slow release open.
7	Not used
8	Not used
9	Not used
10	Not used
11	Not used
12	Not used
13	Not used
14	Not used
15	Blood pump energized. Should be turning clockwise.
16	Blood pump reverse. Should be turning counterclockwise when energized.

* Read from left to right.

Table 3-2
CPU printed circuit board status LEDs

LED	Indication when illuminated
ALE (yellow)	Address Latch Enable. Processor is active.
SOD (red)	Serial Output Data. Processor is sending data to the display.
POWER (green)	+5V Power is supplied to the CPU board.

Table 3-3
Motor control printed circuit board status LEDs

LED	Indication when illuminated
Enable (green)	Indicates motor is enabled to spin centrifuge.
Reverse (yellow)	Indicates centrifuge control is in running direction. LED is off during braking.
Overspeed (red)	Indicates centrifuge speed is within specifications and K2 is energized.

Table 3-4
Driver printed circuit board status LEDs

LED	Indication when illuminated
LED 1 Power (green)	+24V power is supplied to the driver pcb.
LED 2	+5V power is supplied to the driver pcb.
LED 3	-15V power is supplied to the driver pcb.
LED 4	+15V power is supplied to the driver pcb.
LED 5 (red)	
BP EN	Blood pump enabled.
REV	Blood pump reversed.
AC EN	Not used.
C-SPD	Centrifuge speed sensor.

3.2.3 DIAGNOSTIC DISPLAY MESSAGES

The CS 4's microprocessor performs system self-checks and provides diagnostic display messages when a problem is encountered. Chapter 4 provides a detailed explanation of the significance of diagnostic messages.

Note: Many diagnostic messages merely indicate a transient problem such as twisted tubing or improperly installed disposables. Very often making a minor adjustment will correct the problem; be reasonably sure a component is faulty before performing a Service Procedure.

Chapter 4, software diagnostics

Contents

Paragraph		Page
4.1	SHUTDOWN AND NON-SHUTDOWN ERRORS, AND FAULT CONDITIONS	4-2
4.2	CS 4 TEST FUNCTIONS	4-2
4.2.1	Power-up system tests	4-2
4.2.2	Operating tests	4-3
4.2.3	Fault conditions	4-3
4.2.3.1	Fault condition messages and error codes	4-3
4.3	DIAGNOSTIC FUNCTIONS	4-4
4.4	POWER-UP SYSTEM TESTS	4-8
4.4.1	Power-on sequence	4-8
4.4.1.1	NVRAM battery test	4-8
4.4.1.2	NVRAM memory contents test	4-9
4.4.1.3	ROM checksum test	4-9
4.4.1.4	RAM function test	4-9
4.4.1.5	Air detect function test	4-9
4.5	OPERATING TESTS	4-10
4.5.1	Centrifuge-related tests	4-10
4.5.1.1	Reset-7 error	4-12
4.5.1.2	Cover latch failure	4-12
4.5.1.3	System and control errors	4-12
4.6	FAULT CONDITIONS WHICH INTERRUPT PROCESSING	4-13
4.6.1	Pump not turning	4-13
4.6.2	Optics low voltage	4-13
4.6.3	Waste bag full	4-14
4.6.4	Air detects	4-15
4.6.5	Centrifuge cover open	4-16
4.6.6	Long Empty/Return cycle	4-17
4.7	DIAGNOSTIC FUNCTIONS	4-18
4.7.1	Overview	4-18
4.7.2	RAM test	4-18
4.7.3	ROM checksum test	4-18
4.7.4	Error history	4-19
4.7.5	Special diagnostic functions	4-19
4.7.6	Optics and weight display	4-19
4.7.7	ROM checksum storage	4-19

4.7.8 NVRAM re-initialization 4-20
4.7.9 Membrane keyswitch test 4-21
4.7.10 Pump volume per pump revolution record 4-21

Figure Page

4-1 Location of fault condition message on display panel 4-4

Table Page

4-1 Fault condition messages 4-4
4-2 Error codes 4-7

4.1 SHUTDOWN AND NON-SHUTDOWN ERRORS, AND FAULT CONDITIONS

Please note the following definitions of terms used in this manual. A *shutdown error* is an error detected by the main processor (CPU) which is handled by shutting down all ongoing processes (centrifuge and pumps off, clamps closed), displaying an error message on the second line of the display, and then locking up the keyboard. The CS 4 must be powered off and then powered on again to recover from shutdown errors. A detected *non-shutdown error* displays a warning message but allows the continued operation of the machine.

Fault conditions are not errors. Fault conditions interrupt processing and warn the user of a problem which normally the user can correct. Fault conditions are generated when the machine finds fault with the "environment" of the machine. Examples of fault conditions include air detects, an open centrifuge cover, and similar problems.

4.2 CS 4 TEST FUNCTIONS

4.2.1 Power-up system tests

The goal of the power-up system tests is to detect hardware (electrical) problems which could affect the operation of the machine. All but one of the errors detectable by the system tests are shutdown errors. When all tests are passed a reasonable assurance of proper machine operation is gained.

These tests require little or no user intervention.

The power-up tests consist of the following:

1.) non-volatile RAM (NVRAM) battery and contents check
2.) ROM checksum test
3.) RAM function test
4.) air detector function test

(Please note that a checksum is nothing more than a sum of numbers. A checksum can be calculated for an area of memory by computing the sum of the numbers stored in that area of memory. If the contents of the memory area are changed then it is highly likely that that memory's checksum will also change.)

4.2.2 Operating tests

During machine operation certain tests are performed periodically. These operating tests check for centrifuge communication problems, low optic system voltage, and memory-access or memory-use errors. An optics error is the only non-shutdown error which can be detected by these tests.

4.2.3 Fault conditions

Fault conditions occur when the machine is in a processing mode. A fault condition message (appearing on the display's top line, right-of-center, as shown in Figure 4-1) warns the user of the fault condition. Processing is interrupted; the pump stops and the open clamp closes. After some time, the centrifuge, if on, will slow to idle speed (3600 rpm). After about 4 minutes at idle speed the centrifuge will automatically stop. (Normally, processing is resumed by the operator in less than 4 minutes.)

Help messages are available to aid the user in determining the cause of the fault condition. Hardware failures can cause fault conditions to occur repeatedly; however, the diagnostics do not test for these types of failure. To test for hardware-generated fault conditions manually operate the machine to exercise all the hardware. (See the system checkout in Chapter 5.)

4.2.3.1 Fault condition messages and error codes. Fault condition messages are listed in Table 4-1, and error codes are given in Table 4-2. In the discussion that follows shutdown error messages are referred to by error code.

The diagnostic mode is not accessible to the normal user since access to the CPU board in the card cage is required to enter the diagnostics. The diagnostics are designed to provide a means of checking the operation of the pump volume accounting, the weigher, the optics, and the keyboard.

FAULT CONDITION MESSAGE

```
WASH      AUTO          <OUT OF SALINE>

PROC'D VOL=450       RET'D VOL=0*
```

ASTIRISK INDICATES THAT PRESSING HELP PROVIDES FURTHER INFORMATION

Figure 4-1, Location of fault condition message on display panel

In addition, the RAM and ROM ICs (integrated circuits or "chips") are tested and errors can be localized to a specific IC.

4.3 DIAGNOSTIC FUNCTIONS

As mentioned earlier, an error history of the machine is displayed on entry to the diagnostic mode. Please note that when new program chips (ROMs) are installed one *must* enter the diagnostic mode to store the new ROM checksums. Otherwise, the machine will fail the System Power-up test. The ability to use the diagnostics requires that most of the system electronics be functioning. Understandably, the diagnostics cannot detect *all* possible problems with the system.

Table 4-1
Fault condition messages

Message	*Indication/operator action*
<CENT BRAKING DELAY>	Indicates that the centrifuge is braking; there will be no response to key input until braking is completed. Do not attempt to open the centrifuge cover until the <STOPPED> message appears. The cover is locked until the centrifuge comes to a complete stop.
<CHECK BAG FOR AIR!>	Indicates a long EMPTY mode. The CS 4 computer has determined that the bowl should be empty by this time, based upon the volume pumped. Check to see that the CS4 is still pumping blood and that there is no air in the Reinfusion bag. Press RESUME to restart.

Table 4-1 (Cont)
Fault condition messages

Message	*Indication/operator action*
<CHECK FOR AIR!>	Indicates long RETURN mode. See recommendations in <CHECK BAG FOR AIR>.
<EMPTY WASTE BAG>	Indicates that the waste bag is almost full and should be emptied or replaced.
<OPEN & CLOSE PUMP>	Indicates that the pump is not turning. Check to see that the pump platen is closed completely and that there are no kinks or obstructions in the pump tubing.
<PAUSED--PUMPING AIR>	In manual, indicates an air detect in RETURN or EMPTY. Check to see if the bowl is empty, and that the tubing is properly inserted into the air detector.
<RECENTRIF. DELAY>	In specific cases in automatic, delays pump and clamp opening. This is normal operation, and is intended to allow the centrifuge to spin for a few moments before fluid is pumped into the bowl so that separation may be accomplished. Pumping into a bowl before the red cells are allowed to separate from the supernatant may force some cells into the Waste bag.
<RESERVOIR EMPTY>	In automatic, indicates that air has been detected during FILL. If the Reservoir is indeed empty, wait until approximately 500 ml are in the Reservoir before pressing RESUME. If the Reservoir is not empty, check the red FILL line for air and be sure it is pushed all the way into the air detector.

Table 4-1 (Cont)
Fault condition messages

Message	*Indication/operator action*
<SALINE BAG EMPTY>	In automatic, indicates that air has been detected during WASH. Check to see that there is saline in the bag or bags and that the fluid path is unobstructed (that is, no slide clamps, kinks, etc.), and be sure the tubing is pushed all the way into the air detector.
<SENSORS DISABLED>	In manual, indicates normal operation. This message reminds the operator that the system is dependant upon the operator's monitoring of the procedure in manual.
<UNIT NOT WASHED!>	Indicates that the unit has not been washed, usually because the NO WASH button has been pressed. Accompanied by an audible warning on entry into EMPTY only.
<REINF. BAG EMPTY!!!>	In automatic, indicates that air has been detected during the CONCENTRATE mode. If the reinfusion bag is not empty, check to see that the fluid path is unobstructed by clamps, kinks, etc., and be sure the tubing is pushed all the way into the air detector.
<WASTE BAG FULL>	Indicates that the waste bag is full and should be emptied or replaced.
<CLOSE CENT COVER>	The cover interlock switch is open because the cover is open. The centrifuge will not run with the cover open.
<WARNING: AIR DETECTOR DOES NOT SEE AIR>	See section 4.4.1.5.
<WARNING -- PUMPING AIR>	See section 4.6.4.

Table 4-2
Error codes

Code	*Message*	*Indication*
1	ERROR 1	RESET 7. There has been a system malfunction. Powering off and on should restore operation.*
2	ERROR 2	Nonvolatile values lost.*
3	ERROR 3	The Motor Controller detected an overspeed.*
4	ERROR 4	The Motor Controller detected a centrifuge speed sensor fault.*
5	ERROR 5	Not used.
6	ERROR 6	There has been a Motor Controller communication error.*
7	ERROR 7	A centrifuge speed data error has been detected.*
8	ERROR 8	The CPU has detected a centrifuge overspeed.*
9	ERROR 9	There has been a control error.*
10	ERROR 10	The centrifuge cover latch has failed.*
11	SELF-TEST FAILURE, CALL 800-634-8010.*	
12	ERROR 12	A system error has been detected.*
13	ERROR 13	A memory configuration error has been detected.*
14	The battery that supports the nonvolatile memory is low. This error is not a shutdown error and is stored in the error history buffer only.)	
15	AUTO SYSTEM FAILURE The optics voltage reading indicates a malfunction.	

**When this message is displayed the keyboard is locked up. The machine must be turned off and on to reset.*

4.4.1 Power-on sequence

On power-up, the following sequence of events occur. First, the stack memory pointer is initialized to point to an address in the 4016 RAM. If this RAM is not functional, the system will never power-up successfully. Second, system variables are initialized. Third, the input/output devices are initialized: the pump is disabled, the clamps are closed, and the centrifuge is turned off. Finally, the machine beeps "hello" and displays the power-up message:

```
CELL-SAVER 4        1987      REV. E

        HAEMONETICS CORPORATION
```

This is followed by the message:

```
NORMAL PROTOCOL    2 CYCLES    1000 ML WASH

FILL SPD=500  WASH SPD=600  EMPTY SPD=500
```

While this message is being displayed, the Power-up System Tests are performed. These tests are described individually in the following sections.

4.4.1.1 NVRAM battery test. The first test checks the viability of the NVRAM battery. The NVRAM battery provides the power needed to store the NVRAM memory contents. Detection of a discharged or malfunctioning battery is not a shutdown error. The message,

```
LOW BATTERY, REPORT TO 800-634-8010
```

is displayed to warn the user of the potential problem and error code 14 is recorded in the error history buffer. The message is displayed for at least 3 seconds before the next test is executed. The machine is still operable as long as the NVRAM contents have not been altered.

Report any occurrence of the battery warning message to Haemonetics Field Service. Since the battery is an integral part of the NVRAM, the NVRAM itself must be replaced before it becomes a serious problem. If

the battery ever completely loses its charge, the ROM checksum data will be lost when the machine is turned off for any length of time and the machine will consistently fail the power-up tests. Problems with the battery are rare and the life expectancy of the NVRAM battery is about 10 years.

4.4.1.2 NVRAM memory contents test. This test examines the data stored in the NVRAM. The checksum of the stored data is compared to the stored checksum (recalculated whenever data is written into the NVRAM). The checksums must match. The matching of checksums confirms that there is a high likelihood that the NVRAM data is accurate.

In either case, if an error is found, error code message #2 is displayed and the error code is recorded in the error history buffer. Error #2 is a shut-down error, and the machine must be powered off to reset. The NVRAM, however, is reinitialized to its default values when the error is detected so that on the next power-up the machine should be operable. If the NVRAM is non-functional (either defective or not seated properly in its socket), it will fail this test on every power-up.

4.4.1.3 ROM checksum test. There are 5 ROMs (Read Only Memory program chips) in the CS 4. This test calculates the checksum for each ROM. These calculated checksums are compared to stored checksums. Any discrepancy between the calculated and the stored checksum values is a shutdown error. Error code message #11 is displayed and the error code is stored. This test failure usually indicates a problem with the ROMs or a failure to store the new checksums when the chips were installed. The cause of this test failure must be determined before the machine can be used.

4.4.1.4 RAM function test. The read/write functions of each of the three system RAM chips is tested next. Data is written to and then back from each memory location. Any read/write error is a shutdown error. Error message #11 is displayed and error code 11 is recorded when an error is detected. This type of failure is usually caused by a defective or improp-erly-seated RAM IC.

4.4.1.5 Air detect function test. Finally, the ability of the air detector to indicate "air detected" is tested. Basically, an air detect signal must exist before the machine will exit this test. Thus, failure of the machine to detect air will make the machine inoperable, as intended. The machine will not operate unless the air detector is able to detect air on power-up. If

the air detect system initially indicates that fluid is present, the operator is warned by the message,

```
WARNING:  AIR DETECTOR DOES NOT SEE AIR.

PUSH HELP FOR INSTRUCTION.
```

All buttons except HELP are disabled.

4.5 OPERATING TESTS

The first help message asks the operator to remove the air detector portion of the tubing and reposition it in the air detector. Removing a fluid-filled tube from the air detector should result in an air detect signal. Inability to sense air leaves the machine inoperable. Conversely, the ability to sense air does not guarantee the air detect system is functioning properly. For example, a system that always detected air would pass this test. This, however, is considered a safe failure which would manifest itself through repeated air detect fault conditions. Once air is detected this test is exited and the power-on sequence continues. Note that an error code does not exist for this test (i.e., no error code is recorded in the error history buffer). Failure to sense air on power-up is most often due to a bad electrical connection somewhere in the harness to the air detector from the driver board. A bad ribbon cable connection between the driver and I/O boards could also be the cause of the failure.

4.5.1 Centrifuge-related tests

There are two levels of centrifuge control. The main processor (8085 CPU on the CPU board) sends commands and data to the centrifuge motor control (MC) processor (located on the I/O board). The MC processor directly controls the centrifuge motor via the circuitry on the motor control circuit board. Communication between the CPU and MC processors is implemented through the 8255 peripheral interface on the I/O board.

When the MC processor detects a centrifuge error it immediately brakes the centrifuge and sends an error message to the main CPU. The main CPU decodes the message, stores the appropriate error code and displays the appropriate error message. (MC detected errors are described later in this section.) In addition, the CPU performs two centrifuge test functions.

First, it checks that communication with the MC processor is maintained. A communication error exists when the MC processor does not read or does not respond to commands or data from the CPU. Secondly, the main CPU constantly tests for centrifuge overspeed errors. A centrifuge overspeed error occurs when the centrifuge is spinning 420 or more rpm above the last requested speed.

This is why the machine should not be powered off and then on with the centrifuge spinning. On power-up the requested speed is zero; if the centrifuge is spinning at 420 rpm or higher, an overspeed error is detected. Therefore, the centrifuge should always be stopped before the system is powered off and on. At the normal operating speed of 5650 rpm an overspeed is detected when the centrifuge speed reaches 6070 rpm.

When a communication error is detected, error code message #6 is displayed and the error code is recorded into the history buffer. Usually, communication errors are caused by a faulty ribbon cable connection of the cable between the driver and motor control board or of the cables between the driver and I/O boards. The 8255 and the MC processor (8749) on the I/O board, and the motor control board are other prime suspects. A centrifuge speed error detected by the CPU gives error code message #8 and records error code 8.

Centrifuge speed errors most often occur on power-up as described above. Otherwise, the problem can be noise on the centrifuge interrupt line, a problem with the MC processor or with the motor control circuitry on the motor control board. At the direct level of control, the MC processor is constantly testing for centrifuge overspeed, for speed data errors, and for sensor faults. A centrifuge overspeed is detected by the MC processor when the centrifuge speed is greater than 6100 rpm . A centrifuge speed data error occurs when the MC processor receives out-of-range speed requests from the CPU. This error indicates corruption of the speed data either as stored in memory or occurring during data transfer from the CPU to the MC processor.

Bus problems including noise and faulty ICs can cause the data to become corrupted. Loss of signal from the Hall-effect sensors indicates a sensor fault. A sensor fault can be caused by a loose or bad ribbon cable connection between the driver and motor control boards or by a faulty connection in the harness connecting the sensors to the motor control board. An error detected by the MC processor is communicated to the main CPU via the 8255 I/O interface.

The main CPU constantly checks for error messages when processing in Fill, Concentrate, or Wash. If the MC processor sends a centrifuge overspeed message the CPU displays error code message #3 and records the error code. If the MC processor sends a sensor fault message the CPU displays error code message #4 and records the error code. A centrifuge speed data error is error code 7 and error code message 7 is displayed. In the current version, Rev E, of the MC program the over-current message will never be sent. If this is added in a future version the CPU will display error code message #5 and record error code 5.

Messages from the MC processor are not monitored when the machine is in a standby state. If the MC processor detects an error, it disables the centrifuge motor drive circuit effectively stopping power to the motor. In addition, the main CPU cuts off the ac power supplied to the motor control board when a centrifuge error or any other shutdown error is detected, causing the centrifuge to coast to a stop.

4.5.1.1 Reset-7 error. The Reset-7 error is a special error not associated with any test. Basically, a Reset-7 refers to an instruction which the CPU should never execute. However, if the CPU gets lost, this instruction can be executed. Execution of this instruction allows the CPU to recover to a safe state. On recovering, error code message #1 is displayed and the error code is recorded in the error history buffer. Reset-7 is a shutdown error requiring the machine to be powered off then on to reset. This problem can have many causes too numerous and obscure to list.

4.5.1.2 Cover latch failure. Before the centrifuge is allowed to run, the centrifuge cover must be closed and latched. When the cover is closed the cover latch is engaged and the centrifuge is brought up to speed. From the time the centrifuge starts until it stops, the status of the centrifuge cover latch is continuously examined. The latch consists of a pneumatically-driven pin which, when engaged, prevents the cover from being opened. When engaged, the pin also activates a cover latch switch whose status can be examined by the CPU. The latch switch status is examined every second while the centrifuge is running. If this switch opens for one second, the condition is sensed and becomes a shutdown error. Error code message #10 is displayed and the error code recorded. This failure can be caused by loss of pressure in the pneumatic system due to compressor drop-out or leaks in the system. Problems with the switch harness also can cause this error. The status of the switch is checked by reading the switch signal via the A/D (analog-to-digital converter) on the I/O board. Thus, a faulty A/D can give a false indication of cover latch failure.

4.5.1.3 System and control errors. A System Error is a shutdown error which occurs when the stack pointer is found to be out-of-range. The stack pointer points into a pre-defined area of memory. The stack pointer should never point anywhere outside of this area. If the stack pointer points elsewhere it indicates that the CPU is "lost."

Every time a pump or air detect interrupt occurs the value of the stack pointer is checked. If the stack pointer is out-of-range a shutdown error is indicated; error code message #12 is displayed and the error code is recorded in the error history buffer. The cause of this error can be difficult

to ascertain. A control error is an error detected by the software routine which switches control between process modes. If an erroneous control code is received by this routine it catches it and declares a shutdown error. This error should never occur in normal operation. A control error stores error code 9 and displays error code message 9.

4.6.1 Pump not turning

A pump fault condition is indicated by the message:

```
<OPEN & CLOSE PUMP>
```

4.6 FAULT CONDITIONS WHICH INTERRUPT PROCESSING

This condition indicates the pump is not turning when it should be. For the pump to turn the pump platen must be latched down. When down, the platen depresses a pin which, in turn, activates a pump latch switch which completes the pump drive circuit. The drive circuit is open when the pump platen is open. Therefore, failure to activate the pump latch switch is the most obvious cause of this fault condition. Problems with the pump motor, pump harness, pump drive circuitry (driver board), I/O-to-driver board ribbon cables, and the digital-to-analog converter on the I/O board are other potential sources of failure. If the pump does turn momentarily, but is not sensed as turning, the problem is with the pump interrupter signal. Again, the wiring is suspect; the signals can be traced to locate the source of the problem.

4.6.2 Optics low voltage

The optics voltage gives some indication of the functioning of the optics system. At the beginning of Fill Auto and on entry to Ready Standby the optics voltage is examined. The optics reading must be above the minimum acceptable "blacked out" reading. If the optics reading is below this minimum, automatic operation is not allowed although manual operation is allowed. Thus, this is not a shutdown error. On detection of the problem the machine will enter a Ready Manual state. The warning message,

```
AUTO SYSTEM FAILURE
```

is displayed. In addition, the user is prompted to report the problem by the message,

```
OPERATE MANUALLY, REPORT TO 800-634-8010
```

on the second line of the display. Please note this is the *only* time you will ever see a "Ready Manual" state.

Once this Ready Manual message is displayed, only the manual processing keys will start processing; the automatic function keys (Start Auto, Pause/Resume, Final Cycle) are disabled. The optics problem must be determined by tracing the signals through the optics system.

4.6.3 Waste bag full

In Fill, Conc, and Wash the weight of the waste bag is continuously monitored and recorded whenever the pump is turning. The weight-checking algorithm filters the weight data so that transient changes in weight are ignored. When the waste bag contains approximately 8 liters, a software indicator variable is set. In Fill and Conc, Auto or Manual, and in Manual Wash the message,

```
EMPTY WASTE BAG
```

will appear to warn the user of the almost-full waste bag. In addition, if the indicator is set on entry to Fill Auto or Manual, the machine will stop and display the message,

```
<WASTE BAG FULL>
```

When the waste bag contains approximately 10 liters the CS 4 will interrupt processing if in Fill, Conc, or Wash Auto or Manual. On interrupting processing, the machine goes to a "paused" standby state. The message,

<WASTE BAG FULL>

will be displayed and Help messages will be available via the HELP button. The waste bag must be nearly emptied to reset the weight indicators. The waste bag messages will disappear when the display is next updated. That is, the waste bag full message will not immediately disappear when the weight of the bag decreases, but when the display is next updated. The waste bag must be hanging freely for the waste bag weigher to operate properly. If the weigher load cell is damaged, or its connecting harness is faulty, erroneous weigher data can result in false waste bag full indications.

4.6.4 Air detects

The air detect function is enabled in all Auto modes and in Empty and Return Manual modes. The air detect function is also enabled in the Pump Only mode. On entry to any processing mode the air detect function is not enabled immediately. A delay of several pump revolutions is given to allow the tubing through the air detector to prime with fluid to prevent premature (false) air detects. An air detect in Fill, Conc, or Wash Auto interrupts processing, putting the machine in a Paused Standby state. The appropriate air detected message is displayed:

<WARNING PAK EMPTY!>

<RESERVOIR EMPTY>

<SALINE BAG EMPTY>

In Wash Auto, if 87.5% or more of the wash volume has been used, the CS 4 advances to the next state, usually Empty. Help messages are available whenever operation is interrupted and an "air detect" message appears.

In Empty or Return Auto an air detect stops emptying of the bowl and advances the machine to the next process cycle or to the Ready Auto Standby state. In Empty or Return Manual an air detect interrupts emptying of the bowl, putting the CS 4 in a Paused Standby state. The message,

```
<PAUSED-PUMPING AIR>
```

is displayed to alert the user. In Pump Only, an air detect zeroes the pump speed and displays the message:

```
<WARNING-PUMPING AIR>
```

The pump must be slewed up from zero speed to resume pumping. There is a delay of 18 pump revolutions before the air detector function is re-enabled after an air detect.

4.6.5 Centrifuge cover open

Before the centrifuge can run, the centrifuge cover must be closed and latched. If the cover is open when the centrifuge is to run , the CS 4 will ask the user to close the cover with the message:

```
CLOSE CENTF COVER
```

A cover switch is closed by the latching of the cover. The status of this cover switch is examined by the CPU. When the cover is closed the

pneumatic cover latch mechanism is engaged and simultaneously closes the latch switch.

Latching the cover closes the cover latch switch. The centrifuge is then commanded to run and the CLOSE CENTF COVER message disappears. Failure to sense the closing of the cover switch keeps the message displayed and leaves the keyboard locked out. The machine is effectively "hung-up" until the cover is sensed as closed and latched or the machine is powered off. If the cover latch mechanism is physically hung up, wiggling the cover may allow the latch to engage. Other causes of failure include loss of pressure in the pneumatics system, faulty electrical connections, cover switch out of adjustment, or even a defective A/D on the I/O board (which is used to sense the status of the cover switches).

4.6.6 Long Empty/Return cycle

As an additional safety measure, the number of pump revolutions is counted in RETURN and EMPTY. Should the pump revolution count exceed an upper limit of 65 pump revolutions the CS 4 stops and warns the user. The warning message shown below is displayed:

```
<CHECK BAG FOR AIR!>
```

The bowl should empty of fluid at around 54 pump revolutions, the fluid being displaced by air. Note this is why the waste bag must always contain at least a bowl-full of air to displace the fluid in the bowl as the bowl empties.

The emptying of the bowl is indicated by an air detect. Pressing RESUME will allow up to 18 more pump revolutions before again stopping and warning the user of the long cycle. This condition can occur when the air detector fails to detect air or when fluid remains in the tubing. If fluid remains in the tubing after 65 pump revolutions either the bowl is plugged by debris, the waste bag does not contain any air, the pump is not pumping effectively, or the line to the reinfusion bag is restricted. Another possibility is that the registered pump count is higher than the actual number of revolutions. In this case, the problem is due to a defective pump interrupter signal. If air is present but not sensed then a problem with the air detector is indicated.

4.7.1 Overview

The diagnostic mode of the CS 4 is entered by pushing the (red) trap switch on the CPU board. The CPU pcb is accessed by removing the access panel, unscrewing the knurled knobs, and lowering the card cage. The switch is clearly labeled. The machine must be powered off to exit the diagnostic mode. On entry to the diagnostics the functional integrity of the RAM ICs and the checksums of each ROM is calculated and the results of these tests are displayed on the top line of the display. An error history is displayed on the second line of the display. Additional diagnostic functions are an "Optics and Weight" display, ROM checksum calculation, NVRAM data reinitialization, a membrane keyboard switch test, and a pumped volume per revolution calibration. All of these diagnostic functions are described individually in the following paragraphs.

4.7.2 RAM test

The RAMs are tested by performing the read/write test described above. The 8156 and 4016 RAM on the CPU board, and the NVRAM on the Expansion board are tested in succession. On successful completion of each RAM test a number 1, 2, and 3 corresponding to the 8156, 4016, and NVRAM, respectively, is displayed. If a RAM fails its test, an asterisk (*) is displayed instead of its number. A RAM problem can be caused by something other than the RAM itself, for instance, a faulty chip select signal.

4.7.3 ROM checksum test

Following the RAM test, the ROM checksum test is executed. The checksum of each ROM is calculated and displayed on the top-right portion of the display. If the calculated checksum does not match the corresponding checksum stored in NVRAM, an asterisk is displayed to the right of the checksum value to indicate the discrepancy. Note that if this condition exists on power-up the self-test will fail. All 5 checksums are calculated in ascending address order, that is, ROM #1 up to #5. Asterisks next to the checksums indicate discrepancies with the stored checksums as described above. Discrepancies will exist when new program chips are installed. The new checksums must be recalculated and then stored in NVRAM. Other causes of discrepancy are failed ROMs, or bus failures. Loss or corruption of the stored checksum data in the NVRAM could also cause this failure. The cause of the failure must be ascertained before the machine can be made operational.

4.7.4 Error history

On the second line of the display, on entry to the diagnostics, the machine's recent error history is displayed. For example,

```
ERRORS:  2,4,7
```

might be displayed. The error codes correspond to the errors. These errors are summarized in Table 4-2. Up to eight errors are remembered and displayed. This error history may aid the service engineer in trouble-shooting problems, since the actual detected errors are recorded. (Often users do not remember the actual error or provide misinformation.)

4.7.5 Special diagnostic functions

The diagnostic functions described above occur automatically on entry to the diagnostic mode. The functions described below are selected by pushing a specific button on the membrane panel.

4.7.6 Optics and weight display

The current weigher weight and optics' reading can be viewed by pushing the START AUTO button. The values are displayed on the second line of the display. This display remains up until the membrane key-test or ROM checksum storage functions are entered (see below). After exiting these functions the optics and weight display can be restored by again pushing the START AUTO button. The weigher should read less than 25 when unloaded and at least 168 plus the initial reading when completely loaded. The optics should read between 23 and 31 when "blacked" out. The optics must be calibrated using the documented optics calibration procedure.

Note: The optics gain should never be changed unless the entire optics gain calibration procedure is followed.

4.7.7 ROM checksum storage

Whenever new revisions of the program are installed in a machine the checksums of the new program chips must be stored in NVRAM. Failure to store the new checksum values causes the machine to fail the power-up self-test. To store the checksums of the installed ROMS the NVRAM must not be write-protected (i.e., it must be enabled). The NVRAM can be enabled by switching the toggle switch located to the right of the RS232 connector to the right. When the user pushes the HELP button the

ROM checksums are recalculated, displayed (with no asterisks), and stored in the NVRAM. If the last checksum is successfully stored, the machine beeps and displays the message,

```
SWITCH TO WRITE-PROTECT
```

on the second line of the display. Switching the toggle switch back to the left write-protects (disables) the NVRAM. If this message does not appear and asterisks are displayed next to the checksums then the checksum data was not successfully stored in the NVRAM. This indicates a failure to read or write to the NVRAM or a failure to enable the NVRAM.

4.7.8 NVRAM re-initialization

The protocol parameters which are reprogrammable by the user are stored in the NVRAM. These parameters can be re-initialized to default values by pushing the REPROGRAM button on the membrane panel. All reprogram variables default to factory settings and the error history buffer is "wiped clean." All reprogram values which the user modified and made permanent are lost. The user must power off, then on and enter the reprogram loop to modify the permanent program values. The machine beeps when the REPROGRAM button is pushed to initiate the re-initialization. The display does not show any indication of the re-initialization. The re-initialization process is completed in an instant. The default program settings are as follows:

Option	Normal	Orthopedic	Low Volume
Protocol	Selected	Deselected	Deselected
Wash Volume	1000 ml	1500 ml	1000 ml
Number of Cycles	2	2	2
FILL Speed	500 ml/min	350 ml/min	250 ml/min
WASH Speed	600 ml/min	500 ml/min	200 ml/min
EMPTY Speed	500 ml/min	500ml/min	300 ml/min
Conc Speed (not programmable)	500 ml/min	350 ml/min	150 ml/min
RETURN Speed (not programmable)	500 ml/min	500 ml/min	300 ml/min
Centrifuge speed	5650 rpm	5650 rpm	5250 rpm

4.7.9 Membrane keyswitch test

The keyboard test provides a means of troubleshooting the membrane keyboard switches and associated circuitry. The keyswitch test is entered by pushing the pump slew up key down for about 1 second or until "KEY" appears on the second line of the display. Then pressing any key displays the appropriate key code for that key. The keys and their key codes are given below. The test also indicates multiple key closures by displaying more than one key code at the same time. The keys, PUMP SLEW UP, PUMP SLEW DOWN, and REMOVE AIR cannot be tested by this test and do not display a key code. However, the pump slew keys are tested indirectly when used to enter and to exit this test. The key test is exited by pushing the pump slew down key. The second line of the display is left blank.

The key codes are listed below.

Key	*Code*	*Key*	*Code*
FILL	C3	START AUTO	C4
CONC	CB	PAUSE/RESUME	CC
WASH	D4	HELP	C1
EMPTY	CD	FULL WASH	C9
RETURN	D5	HALF WASH	D1
STOP (WHITE)	C6	ZERO WASH	D9
STOP (RED)	CE	PUMP STOP	DA
REPROGRAM	C0	FINAL CYCLE	C5
YES	C8	PUMP ONLY	C7
NO	D0	A	CF
EXIT	D8	B	D7

4.7.10 Pump volume per pump revolution record

All Volume accounting — Processed, Returned, and Wash volumes — uses the pump-volume-per-pump-revolution value. The default is 5.0 ml if no value is recorded. The value is stored in the write-protected area of Non-Volatile RAM (NVRAM). The procedure for recording or modifying the pump volume/revolution value is described.

The pump volume per revolution can be adjusted between 4.0 to 6.0 ml. The NVRAM write-protect circuit must be disabled when entering or modifying the pump volume value. To disable the write-protect circuit switch, the toggle switch located to the right of the RS 232 connector to the right. In the diagnostics mode pushing the PUMP ONLY button puts you into the "enter and store" pump volume function.

If "??" is displayed on entry to the pump volume enter and store mode, the pump volume value stored is out-of-range and the NVRAM is write-protected. If the value is out-of-range and the NVRAM is not write-protected the pump volume value will be initialized to 5.0 ml. Use the Reprogram up and down arrow keys to modify the pump volume in 0.1 ml increments. To modify the value, the NVRAM must not be write-protected. Use the Reprogram Exit button to exit the mode.

The machine calculates volume by counting pump revolutions and multiplying by the pump volume per pump revolution value. Therefore, if the pump volume/revolution value is accurate, the volume accounting will be accurate also. The pump volume per revolution must be measured for each individual machine and should be rechecked at least yearly.

Chapter 5, System checkout

Contents

Paragraph	Page
General system operation	5-2 through 5-11
Unit current draw test	5-12
Hypot test	5-12
Electrical stress test	5-12
Centrifuge acceleration test	5-13
Bowl vibration test	5-13
Centrifuge cover interlock test	5-13
Centrifuge overspeed function test	5-14
Pump occlusion test	5-15
Programmed pump discharge rate test	5-15
Pump speed adjustment test	5-16
Pump discharge rate/volume accounting test	5-16
Pump cover interlock test	5-18
Pump valve occlusion test	5-19
Bag weigher test	5-19
Air sensor test	5-20
Optics aiming test	5-20
Optics gain test	5-20
Diagnostic mode check	5-21

Table		Page
5-1	Pump speed calibration	5-17
5-2	Volume accounting values	5-18
5-3	Error codes	5-22
5-4	Diagnostic key test	5-23
5-5	Programmed default settings	5-24

Step 1

Install a standard volume bowl from a List No. 243 disposable set into the centrifuge chuck. Install a length (approx. 6 inches) of water-filled IV tubing (tied off at both ends), 0.375-inch inside diameter, into the air sensor. Power on.

a. Display reads,

```
CELL SAVER 4, 1987 REV. E
HAEMONETICS CORPORATION
```

for approximately 2 seconds then,

```
NORMAL PROTOCOL, 2 CYCLES, 1000 ML WASH
FILL SPD=500 WASH SPD=600 EMPTY SPD=500
```

for approximately 2 seconds then,

```
WARNING: AIR DETECTOR DOES NOT SEE AIR
PUSH HELP FOR INSTRUCTIONS
```

b. All LEDs illuminate and remain on.
c. All keys are locked out (disabled) except HELP.
d. A continuous high-pitched tone is generated during the first display and then a short high-pitched tone for the third.
e. Both fans are on and airflow is outward from the cabinet.
f. The centrifuge lamp is on.

Note: The first power-on display will always show the installed program revision level and year released.

The second display (above) shows the program parameters. If the unit has been reprogrammed for the orthopedic protocol, the following display will appear:

```
ORTHO PROTOCOL, 2 CYCLES, 1500 ML. WASH
FILL SPD=350 WASH SPD=500 EMPTY SPD=350
```

Once again, the values given above are default values. If these have been reprogrammed, your display may show different values.

Note: Any time a key is disabled and an attempt is made to select it, a low-pitched tone is generated or no tone is generated. Any time an enabled key is pressed a single high-pitched tone is generated.

Step 2

Remove the IV tubing from the air sensor and then **replace it**.

a. The display reads,

```
OK - AIR DETECTOR IS FUNCTIONING
```

for approximately 2 seconds then,

```
NORMAL AUTO <TO GO - PUSH START>
TO SET UP OR CHANGE PROTOCOLS-PUSH HELP
```

b. All LEDs extinguish except the following:

START/AUTO (Flashing)
HELP
FULL/WASH

c. All keys are enabled.
d. A single high pitched tone is generated.

Step 3

Press REPROGRAMMING and set the system to the parameters shown in the next column.

Default parameters:

Wash control on	Fill speed = 500
Normal protocol	Wash speed = 600
500/1000 wash	Empty speed = 500
2 cycles.	Centrifuge speed = 5650

Step 4

a. Press PAUSE/RESUME once.
b. Press PAUSE/RESUME again.

a. All three tubing clamps open.

b. All three tubing clamps close.

Step 5

Press PUMP/ONLY.

a. The display reads,

```
PUMP ONLY  PRESS "A" FOR CLOCKWISE
PUMP SPD=0  PRESS "B" FOR COUNTERCLOCKWISE
```

b. All key LEDs extinguish except the following: PUMP ONLY, A , FULL WASH, HELP.

c. All key functions are locked-out except the following: STOP, PUMP CONTROLS, A, B, PUMP ONLY.

Step 6

Using the slew-up key increase the pump speed to approximately 500 ml/min.

a. The pump begins rotating clockwise at the selected speed.
b. The display indicates the selected speed.

Step 7

Press "B" and after the pump stops rotating, slew the speed up to approximately 500 ml/min again.

a. The pump begins rotating counterclockwise (counterclockwise) at the selected speed.
b. The display indicates the selected speed.
c. The "B" LED illuminates and "A" extinguishes.

Step 8

Use the slew down key and lower the pump speed to 0 and then raise it to 500.

The display indicates that the pump is responding by lowering and raising the speed as requested.

Step 9

Press PUMP STOP.

a. The pump slews down to 0 and stops.
b. The display indicates 0.

Step 10

Press PUMP ONLY again to deselect this function and then press and hold REMOVE AIR.

a. The display reads,

```
NORMAL AUTO <TO GO -- PUSH START>
REMOVE AIR WITH REINFUSION BAG INVERTED
```

b. The pump begins rotating clockwise at 600 ml/min
c. The EMPTY/CONC (blue) tube clamp opens.
d. The REMOVE AIR LED illuminates and START AUTO PROCESS extinguishes.

Step 11

Release REMOVE AIR.

a. Display returns to power-on ready display.
b. The tube clamp closes.
c. The pump stops.
d. The REMOVE AIR LED extinguishes and START AUTO PROCESS illuminates (flashing).

Step 12

Press REPROGRAM three times.

a. The display reads,

```
(1ST LINE UNCHANGED)
CHANGE WASH VOLUME - 500/1000?  (YES/NO)
```

b. The REPROGRAM LED illuminates.

Step 13

Press YES and verify:

a. The display reads,

```
(1ST LINE UNCHANGED)
USE REPGM ARROWS TO CHANGE:  500/1000
```

Step 14

a. Press NO

a. The displayed volumes decrease to 250/500.

b. Press YES.

b. The volume returns to 500/1000.

Step 15

Press EXIT

The CS 4 returns to the power-on ready state.

Step 16

Press NO WASH and then HALF WASH.

a. A single high-pitched tone is generated for each key when pressed.
b. The selected key LED illuminates and the previous extinguishes.

Note: Ensure that HALF WASH is selected for the remainder of the function test.

Step 17

Press START AUTO PROCESS.

a. The display reads,

```
FILL AUTO
PUMP SPD = 500 CENT SPD=5650 NORMAL @ 1:2
```

b. The centrifuge begins rotating counterclockwise.
c. The pump begins rotating clockwise.
d. The FILL (red) tube clamp opens.
e. The FILL key LED is illuminated. HELP extinguishes and the START AUTO PROCESS LED is on steady.

Step 18

Allow the pump to run for at least 30 seconds and then lift the pump cover.

a. The display reads,

```
FILL AUTO  <OPEN & CLOSE PUMP>
PUMP SPD=500 CENT SPD=5650 NORMAL @ 1:2
```

b. The pump stops.
c. The fill tube clamp closes.
d. The PAUSE/RESUME LED is flashing and HELP illuminates.
e. After approximately 15 seconds the centrifuge speed begins slowing to 3600 rpm.

Step 19

Close the pump cover and press PAUSE/RESUME.

a. The display reads,

```
FILL AUTO   <RECENTRIF. DELAY>
PUMP SPD=500 CENT. SPD-5650NORMAL @ 1:2
```

(Speed Increasing)

for approximately 25 seconds then the display reads,

```
FILL AUTO
PUMP SPD = 500 CENT SPD=5650 NORMAL @ 1:2
```

b. After the recentrifuge delay, the pump begins rotating again and the tubing clamp opens.

Note: Anytime the pump stops for approximately 15 seconds or longer and the centrifuge is running, the centrifuge will slow to idle speed (3600 rpm). If the centrifuge remains at idle for more than approximately 4 minutes, it will brake to a STOP. When the pump is restarted and the centrifuge is at idle, there is a 25 second recentrifuge delay. If the centrifuge is stopped there is a 60 second recentrifuge delay.

Step 20

Allow 16 pump revolutions and then remove the IV tubing from the air detector.

a. The display flashes the following message:

```
FILL AUTO  <RESERVOIR EMPTY>
PUMP SPD=500 CENT SPD=5650 NORMAL @ 1:2
```

b. The air sensor LED extinguishes.
c. The pump stops.
d. The tube clamp closes.
e. The PAUSE/RESUME key LED is flashing.

Step 21

Press FINAL CYCLE.

a. The display reads,

```
PUSH THE BUTTON BELOW YOUR CHOICE
RESUME    WASH    CONC    STOP
```

Flashing in sequence

b. The key LED corresponding to the selected option flashes in syncronization with the choice option as follows:

WASH	START AUTO PROCESS
RESUME	PAUSE/RESUME
CONC	FINAL CYCLE
STOP	STOP

c. All keys are disabled except the ones listed above.

Step 22

a. Press PAUSE/RESUME
b. Replace the IV tubing in the air detector.

a. The FILL mode is reactivated after the recentrifuge delay.

Step 23

a. Press WASH.
b. Press START AUTO PROCESS.

a. The display reads as follows with the wash volume value increasing as saline is pumped into the bowl:

```
WASH AUTO  WASH VOLUME  =  XXX/500
PUMP  SPD=600 CENT SPD=5650 NORMAL @ 1:2
```

b. The FILL tubing clamp closes, the EMPTY clamp opens for 2 revolutions then closes, and the wash clamp opens.
c. The FILL LED is extinguished and WASH illuminate.
d. The pump speed increases to 600 ml/min.

Obseve the following after the wash volume reaches 500 ml.

a. The display reads,

```
EMPTY AUTO  <CENT. BRAKING DELAY>
DO NOT ATTEMPT TO OPEN CENTRIFUGE COVER
```

during the braking cycle then ...

```
EMPTY AUTO
PUMP SPD=500 CENT SPD=0  NORMAL @ 1:2
```

b. The pump stops.
c. The centrifuge brakes to a stop.
d. The wash clamp closes.
e. The WASH LED extinguishes and EMPTY LED illuminate.
f. The pump begins rotating counterclockwise once the centrifuge stops.
g. The FILL clamp opens for the first 4 revolutions and then closes and EMPTY opens.

Note: The FILL clamp opens during the first 4 revolutions in EMPTY in order to purge the saline in the line which would otherwise dilute the packed red cells to be emptied. There is no purge in RETURN.

Step 25

After at least 26 revolutions in EMPTY, remove the IV tubing from the air sensor and then re-install.

a. The display reads,

```
FILL AUTO
PUMP SPD=500 CENT SPD-5650 NORMAL  @  2:2
```

Step 26

Press the red STOP button.

a. The display reads ...

```
FILL AUTO  <CENT. BRAKING DELAY>
PUMP SPD=500  CENT  SPD=5650 NORMAL @ 2:2
```

While centrifuge is braking then ...

```
FILL AUTO <STOPPED>
PUMP SPD=500 CENT SPD=0  NORMAL  @ 2:2
```

b. The pump stops.
c. The centrifuge brakes to a stop.
d. The fill clamp closes.
e. The STOP LED (both keys) illuminates.

Step 27

Press HELP.

a. The display reads,

```
FILL AUTO    <STOPPED>
PROC'D VOL  =  XXX RET'D VOL  =  XXX
```

For approximately 5 seconds and then returns to the previous display.

Step 28

Press FILL.

a. The display reads,

```
FILL MANUAL  <SENSORS DISABLED>
PUMP SPD=500 CENT SPD=5650 NORMAL  @ 1:2
```

b. The centrifuge begins rotating counterclockwise.
c. The pump begins rotating clockwise.
d. The fill tube clamp opens.
e. The fill LED is illuminate. and the following extinguish: START/AUTO, PAUSE/RESUME.

Step 29

Press CONC.

a. The display reads,

```
CONC MANUAL     <SENSORS DISABLED>
PUMP SPD=500 CENT SPD=5650 NORMAL  @ 1:2
```

b. The FILL clamp closes and the EMPTY clamp opens.
c. The FILL LED is extinguished and CONC is illuminated.

Step 30

Press WASH.

a. The display reads,

```
WASH  MANUAL    <SENSORS DISABLED>
PUMP SPD=600 CENT SPD=5650 NORMAL  @1:2
```

b. The EMPTY clamp closes and the wash clamp opens.
c. The CONC LED extinguishes and WASH illuminates.

Step 31

Press RETURN

a. The display reads,

```
WASH MANUAL RETURN? SELECT AGAIN
PUMP SPD=600 CENT SPD=5650 NORMAL  @ 1:2
```

Step 32

Press RETURN again within 5 seconds.

a. The display reads,

```
RETURN MANUAL  <CENT BRAKING DELAY>
PUMP SPD=500 CENT SPD=0 NORMAL  @ 1:2
```

b. The centrifuge brakes to a stop.
c. The pump stops.
d. The WASH clamp closes and the FILL clamp opens.
e. The pump begins rotating counterclockwise.
f. The WASH LED extinguishes and RETURN illuminate.

Step 33

Press the white STOP button.

a. The display reads,

```
RETURN MANUAL    <STOPPED>
PUMP SPD=500 CENT SPD=5650 NORMAL  @1:2
```

Step 33 (Cont)

b. The pump stops.
c. The FILL clamp closes.

Step 34

Press EMPTY.

a. The display reads,

```
EMPTY MANUAL    <SENSORS DISABLED>
PUMP SPD=500 CENT SPD=0 NORMAL @1:2
```

b. The EMPTY clamp opens.
c. The pump begins rotating counterclockwise

Step 35

Press STOP and power-off the CS 4 and perfom the following tests.

UNIT LEAKAGE CURRENT

1. Using the Bio-Tek Model 170 Leakage Meter (or equivalent), measure the leakage current through chassis ground. with the ground open in the following modes:

Power-Off
Power-On
Fill
Centrifuge Braking

All readings should be < 100 microamperes.

2. Reverse the polarity of the ac input lines and repeat step 1of this test. Verify that all readings are <100 microamperes.

GROUND CONTINUITY/ISOLATED GROUND CHECKS

1. Using the Associated Research, Model 4040A, continuity tester (or equivalent), verify ground continuity at the following points):

Pump Housing Hardware
Deck Cover Fasteners

2. Using a Fluke, Model 8024, digital volt meter (dvm) or equivalent, verify that there is infinite resistance between chassis ground and signal ground at the GND Test Point on the I/O pcb. The GND test point is located at the middle front of the I/O board between the ribbon connectors. See Figure 2-20.

UNIT CURRENT DRAW

1. Using a Fluke, Model 8024, dvm (or equivalent), and a Fluke Amp Clamp model 801-600, measure the current draw for the following modes at the applicable input voltage:

	Input voltage 115 Vac	Input voltage 230 Vac
Power off	≤ 1 amp	≤ 0.5 amp
Power on	≤ 3 amp	≤ 1.5 amp
Fill	≤ 5 amp	≤ 2.5 amp

HYPOT TEST

1. Using the Associated Research, Model HD 4040A (or equivalent), perform a dielectric withstand test on the unit at the voltage level and duration indicated:

Input Voltage	Hypot Voltage	Duration
120V Unit	1240 Vac	60 seconds
230V Unit	1480 Vac	60 seconds

Note: Procedure should be performed with the ON/OFF switch in the ON position.

ELECTRICAL STRESS TEST

1. Using a variac lower the input voltage to the unit under test to 100 Vac and then measure the power supply levels at the following points:

LOCATION	VOLTAGE
Driver PCB R36	+24.0 ± 1.0 Vdc
Driver PCB R42	+5.2 ± 0.05 Vdc
Driver PCB R43	+15.0 ± 0.5 Vdc
Driver PCB R44	-15.0 ± 0.5 Vdc

- Attach negative lead to ground lug on right front of driver board.
- R36, 42, 43, and 44 are located at extreme right front of driver board at LED indicators. Use the leg of the resister near the front of the pcb.

2. Repeat Step 1 at 140 Vac.

230 volt operation
Perform Step 1 of this test at 210 and 250 volts.

CAUTION

Always ensure unit power is disconnected when disconnecting or reconnecting electrical connectors.

CENTRIFUGE ACCELERATION/DECELERATION TEST

1. Install a water-filled (approximately 1/2 full) 225 ml bowl into the chuck. Simultaneously press FILL and activate a stopwatch.

2. Using a Shimpo, model 205DT (or equivalent), digital tachometer, verify that the centrifuge accelerates to 5650 rpm in < 20 seconds.

3. Allow the centrifuge to reach constant speed then verify that it is 5650 rpm ± 10 rpm. In addition, verify that it is constant to ≤ 5 rpm.

4. Using the reprogram function, modify the centrifuge speed to 4050 and verify that the centrifuge decelerates to 4050 ± 10 rpm.

5. Return the speed to 5650 rpm.

BOWL VIBRATION TEST

1. Install an empty 225 ml bowl into the chuck. Thread a length of 0.375-inch outer diameter x 0.250-inch inner diameter IV tubing through the pump and attach to the bowl inlet port. Terminate the free end in a water-filled reservoir.

2. Activate the manual FILL mode and slew the pump speed to 100 ml/min As the bowl fills with water, observe the water/air interface. Verify that this interface does not become discontinuous (caused by internal vibration) for more than 30 seconds.

3. As the water passes over the shoulder, verify that there is no vibration.

CENTRIFUGE COVER INTERLOCK TEST

1. Power-up the unit and open the centrifuge cover, then press START AUTO PROCESS and verify:

a) The display reads:

```
FILL AUTO    <CLOSE CENTRIFUGE COVER>
PUMP SPD=500 CENTRF SPD=5650 NORMAL @1:2
```

b) The centrifuge is not rotating.
c) The pump is stopped.
d) All pinch valves are closed.

2. Close the cover and verify that the FILL mode is activated.

3. Verify that with the centrifuge running, the cover cannot be opened.

CENTRIFUGE OVERSPEED FUNCTION TEST

1. Disconnect the spindle sensor harness plug (P2) from the centrifuge motor control pcb, and insert the spindle sensor test harness, between the sensor harness and pcb. The slide terminals on the white wire should be connected.

2. Using a Tektronics, Model 4658 oscilloscope, measure the pulse voltage level and frequency of Sensor 1 and 2 with the FILL mode activated and the centrifuge running at 5650 rpm. Ground the scope probe on the black wire terminal. The sensor 1 signal is on the green wire terminal and the sensor signal 2 is on the white wire terminal.

3. Verify that the voltage level is 5V ± 0.4V and the pulse spacing is 10.6 ms ± 0.4 ms on both signals.

4. Power off the system. With the spindle sensor test harness still installed, attach a function generator, HP Model 3310A output to the Sensor #2 terminal. Disconnect the white wire slide terminals. Ground the generator to the black wire terminal.

5. Set the generator for 5V, square pulse output at 90 Hz. Power-up the unit and press FILL. Slowly increase the generator output frequency and verify that at 101 Hz ± 2 Hz. (Approximately 420 rpm greater than selected speed).

a) The display reads:

```
FILL MANUAL <SENSORS DISABLED>
CENTF SPEED ERROR
```

b) The centrifuge coasts to a stop.

PUMP OCCLUSION TEST

1. Install a length of 0.375 inch O.D. x 0.250 inch I.D. IV tubing through the pump with the inlet end attached to a vacuum gauge.

2. Power-up the unit and activate the pump only "A" mode and slew the pump up to 100 ml/min

3. Verify and record that the pump draws a minimum vacuum of 20 inches Hg in < 1 minute. Stop the pump.

4. Slowly rotate the pump rotor 360° by hand, and verify the vacuum reading remains constant (no leakage).

5. Repeat Steps 1 thru 4 with the pump only "B" selected (counterclockwise rotation). The vacuum gauge must be moved to the opposite end of the tubing.

PROGRAMMED PUMP DISCHARGE RATE

1. Verify that the actual pump discharge rate has been marked on a label affixed to the left side of the card cage enclosure.

2. Enter the diagnostic mode by pressing the trap switch (red push button)located on the left side of the CPU pcb.

3. Press "PUMP ONLY" in order to select the pump volume/revolution enter and store mode. The CS 4 display reads,

```
DISABLE NVRAM WRITE-PROTECT TO MODIFY
PUMP VOLUME PER REVOLUTION = ML'S
```

4. Locate the NVRAM write-protect enable/disable switch next to the 25 pin connector (P34) on the Expansion pcb. Move the toggle to the right to disable the write-protect circuit.

5. Verify the displayed pump volume/rev is the same as that in step 1 of this test. If necessary, modify the displayed valve by using the reprogram up and down keys.

6. Press EXIT and switch the enable/disable switch to the left in order to enable the NVRAM write protect circuit.

Note: The programmed value is based on the measured pump discharge rate. Any rework which effects the pump discharge rate, that is, occlusion, will necessitate the re-setting and testing of the programmed value.

PUMP SPEED ADJUSTMENT TEST

1. Install a length of 0.375-inch O.D. IV tubing through the pump. Power-up the CS 4 and enter the manual FILL mode by press FILL.

2. Use the pump slew controls to select a speed of 500 ml/min.

3. Use a digital tachometer, Shimpo Model DT-105 (contact type) or equivalent, to measure the actual pump speed. Verify it is within the calculated speed tolerance. See Table 5-1, using the programmed pump vol/rev recorded.

4. Repeat Step 3 of this test. with the manual EMPTY mode selected by pressing EMPTY. Pump speed is calibrated by adjustments to the pump speed trim pot located at the left front of the Driver board. See Figure 2-41.

PUMP DISCHARGE RATE/VOLUME ACCOUNTING

1. Install a 5 foot length of 0.375 inch O.D. IV tubing through the pump (approximately centered). place the tubing exiting the left side of the pump into the air detector and into a water-filled reservoir. (Placing the tubing through the air detector prevents the tubing from "creeping" into the pump while running).

2. Place the tubing exiting the right side of the pump into the graduated cylinder, 500 ml. Place a small piece of masking tape on the top, outer edge, of the pump rotor. This is to facilitate counting pump revolutions.

3. Power-up the CS 4 and select the manual EMPTY mode by pressing EMPTY. Allow the tubing to completely prime with water then press STOP (either one). Ensure the graduated cylinder is emptied prior to continuing.

4. Press PAUSE/RESUME to once again start the EMPTY Auto Mode. Allow the pump to run for 50 revolutions and then press STOP.

5. Remove the tubing and measure the volume accumulated, record this value, Divide the volume accumulated by 50 revolutions to obtain the pump discharge rate.

6. Press HELP and record the display volume returned. Verify that the displayed volume is equal to the appropriate value in Table 5-2, based on pump ml/rev.

Table 5-1
Pump speed calibration

Pump vol/rev (ml/min)	rpm @ 500 ml/min	rpm @ 1000 ml/min
4.0	125 ± 3	250 ± 6
4.1	122 ± 3	244 ± 6
4.2	119 ± 3	238 ±6
4.3	116 ± 3	232 ± 6
4.4	114 ± 3	228 ± 6
4.5	111 ± 3	222 ± 6
4.6	109 ± 3	218 ± 5
4.7	106 ± 3	212 ± 5
4.8	104 ± 3	208 ± 5
4.9	102 ± 3	204 ± 5
5.0	100 ± 3	200 ± 5
5.1	98 ± 2	196 ± 5
5.2	96 ± 2	192 ± 5
5.3	94 ± 2	188 ± 5
5.4	93 ± 2	186 ± 5
5.5	91 ± 2	182 ± 5
5.6	89 ± 2	178 ± 4
5.7	88 ± 2	176 ± 4
5.8	86 ± 2	172 ± 4
5.9	85 ± 2	170 ± 4
6.0	83 ± 2	166 ± 4

Table 5-2
Volume accounting values

Pump ml/rev	Displayed volume per 50 rev (ml)
4.0	200 ± 8
4.1	205 ± 8
4.2	210 ± 8
4.3	215 ± 9
4.4	220 ± 9
4.5	225 ± 9
4.6	230 ± 9
4.7	235 ± 9
4.8	240 ± 10
4.9	245 ± 10
5.0	250 ± 10
5.1	255 ± 10
5.2	260 ± 10
5.3	265 ± 11
5.4	270 ± 11
5.5	275 ± 11
5.6	280 ± 11
5.7	285 ± 11
5.8	290 ± 12
5.9	295 ± 12
6.0	300 ± 12

PUMP COVER INTERLOCK TEST

1. Install a length of IV tubing in the pump and activate the manual FILL mode. Lift the pump cover and verify:

a. Pump stops.
b. The display reads:

```
FILL MANUAL  <OPEN & CLOSE PUMP>
PUMP SPD=500- CENTF SPD=5650 NORMAL @1:2
```

2. Close the pump cover and verify the pump begins rotating after FILL is pressed.

PINCH VALVE OCCLUSION TEST

1. Install a length of IV tubing through the FILL pinch valve and submerge the free end in a water-filled reservoir. Close the pinch valve such that the IV tube is occluded. Using a sphygmomanometer, verify that the pinch valve will not leak air when pressured to 250 mm Hg.

2. Repeat the above test on the EMPTY and WASH pinch valves.

3. Verify the proper color coding of the pinch valves:

FILL	Red	Front valve
EMPTY	Blue	Middle valve
WASH	Yellow	Rear valve

BAG WEIGHER TEST

1. Power-up the CS 4 and press the TEST switch (red push button) on the CPU board to enter the diagnostic mode.

2. Press START/AUTO to display the digital bag weigher reading. With no weight on the bag weigher, verify a reading of > 0 < 25. Record the initial reading.

3. Hang a 5 lb weight on the weigher and record the reading. Verify that the reading is:

$$35 + (\text{Initial reading}) \pm 4$$

Note: Reading = (Weight x 7) + Initial reading

4. Remove the 5 lb weight and replace with a 10 lb weight. Verify it is:

$$70 + (\text{Initial reading}) \pm 7$$

(see previous note)

5. Remove all weights from the weigher and verify the reading returns to that recorded in Step 2, ± 5.

AIR SENSOR TEST

1. Install a length of IV tubing, 1/2 filled with water, into the air sensor. Activate the FILL cycle. Allow the pump to run for 18 revolutions.

Note: Anytime the pump is activated there is an 18 revolution delay before the air detector is looked at.

2. Slowly pull the IV tubing through the sensor until the unit responds as follows:

a) Display reads,

```
FILL AUTO  <RESERVOIR EMPTY>
```

Flashing

3. Verify that there is a minimum 1/4-inch air gap between the sensing heads of the device and that the device LED is out.

4. Reposition the tubing such that the device sees fluid again, and verify the LED is on and FILL can be reactivated.

OPTICS AIMING TEST

1. Install the optics test fixture (TD2528) into the chuck. Power-up the unit and allow a 10-minute warm-up.

2. Rotate the chuck BY HAND until the transmitter red light falls on the white target. Verify the LED light is centered on the reference line of the target.

OPTICS GAIN TEST

1. Rotate the chuck BY HAND until the transmitter red light falls on the fixture's gray card. Place the unit into the diagnostics mode by pressing the trap switch on the CPU pcb, then press Start/Auto to display the digital A/D channel output

2. Verify that the digital reading is within the following specifications.

$121 \leq Dg \leq 159$

Dg = Digital gray reading

3. Place a black non-reflecting target tightly against the front of the optics lens. Verify the digital reading is as shown below:

$23 \leq Db \leq 31$

Db = Digital black reading

Optics gain is calibrated by use of the optics gain adjustment trim pot located at the left front of the I/O board. See Figure 2-20

DIAGNOSTIC MODE CHECK

1. Power-up the unit and press the trap switch (red push button), located on the left of the CPU pcb, in order to enter the diagnostic mode. The CS 4 display reads,

```
DIA 1 2 3   B1C6 F1D2   835C   2EF1   0F00
ERROR:
```

a. The first 3 numbers indicate the status of the 3 RAMs used in the system as follows:

1 - Z7 on CPU (8156)
2 - Z21 on CPU (4016)
3 - Z10 on expansion (NVRAM)

A read/write is performed on each RAM successively and upon successful completion the corresponding number is displayed. If a RAM fails an asterisk (*) is displayed.

b. Following the RAM test status numbers, the 5 EPROM calculated EPROM checksums are displayed successively, –01 thru -05. The five checksums reppresent Z6 and Z20 of the CPU board, and Z11 , Z12, and Z13 of ther Expansion board, respectively. If the calculated checksum does not match the value last stored in NVRAM, an asterisk (*) will

appear to the right of the checksum value. Note, this discrepancy will exist when new program chips (updated revision) are installed. To store the new values, move the NVRAM write-protect switch (located to the right of the 25-pin connector) on the Expansion board to the right, disabled position, and press HELP. If the values are successfully stored, the CS 4 will display:

```
SWITCH TO WRITE-PROTECT
```

on the 2nd line of the display. Ensure that the write-protect switch is normally left in the enabled position (to the left).

a. On the 2nd line of the display will appear the last 8 error codes as detected by the system. (See Table 5-3.) Error codes are explained fully in Chapter 4.

Table 5-3
Error codes

Code	*Message*	*Indication*
1	ERROR 1	RESET 7. There has been a system malfunction. Powering off and on should restore operation.*
2	ERROR 2	Nonvolatile values lost.*
3	ERROR 3	The Motor Controller detected an overspeed.*
4	ERROR 4	The Motor Controller detected a centrifuge speed sensor fault.*
5	ERROR 5	Not used.
6	ERROR 6	There has been a Motor Controller communication error.*
7	ERROR 7	A centrifuge speed data error has been detected.*
8	ERROR 8	The CPU has detected a centrifuge overspeed.*
9	ERROR 9	There has been a control error.*
10	ERROR 10	The centrifuge cover latch has failed.*
11	SELF-TEST FAILURE, CALL 800-634-8010.*	
12	ERROR 12	A system error has been detected.*
13	ERROR 13	A memory configuration error has been detected.*
14	The battery that supports the nonvolatile memory is low. This error is not a shutdown error and is stored in the error history buffer only.)	
15	AUTO SYSTEM FAILURE The optics voltage reading indicates a malfunction.	

**When this message is displayed the keyboard is locked up. The machine must be turned off and on to reset.*

2. Special diagnostic functions include the following:

a) Optics and weight display
b) Membrane keyswitch test
c) Pump volume per revolution setting
d) NVRAM re-initialization.

The two functions not previously explained are described as follows:

Membrane keyswitch test.

The diagnostic keyboard test provides a means of troubleshooting the membrane keyboard switches and associated circuitry. The key switch test is entered by pushing the Pump Slew Up key down for about 1 second or until KEY: appears on the 2nd line of the display. Then pressing any key displays the appropriate key code for that key. The keys and their key codes are given below. The test also indicates multiple key closures by displaying more than one key code at the same time.

The keys PUMP SLEW UP, PUMP SLEW DOWN, and REMOVE AIR cannot be tested by this test and do not display a key code. (However, the Pump Slew keys are tested indirectly when used to enter and to exit this test.) The key test is exited by pushing the Pump Slew Down key. The 2nd line of the display is left blank. The key codes are listed in the Table 5-4.

Table 5-4
Diagnostic key test

Key	*Code*	*Key*	*Code*
FILL	C3	START AUTO	C4
CONC	CB	PAUSE/RESUME	CC
WASH	D4	HELP	C1
EMPTY	CD	FULL WASH	C9
RETURN	D5	HALF WASH	D1
STOP (WHITE)	C6	ZERO WASH	D9
STOP (RED)	CE	PUMP STOP	DA
REPROGRAM	C0	FINAL CYCLE	C5
YES	C8	PUMP ONLY	C7
NO	D0	A	CF
EXIT	D8	B	D7

The protocol parameters which are reprogrammable by the user are stored in NVRAM. These values can be re-initialized to the factory default settings by pressing REPROGRAM. Note that this resets (wipes clean) the stored error codes as well. The factory default settings are listed in Table 5-5.

Table 5-5
Programmed default settings

Option	Normal	Orthopedic	Low Volume
Protocol	Selected	Deselected	Deselected
Wash Volume	1000 ml	1500 ml	1000 ml
Number of Cycles	2	2	2
FILL Speed	500 ml/min	350 ml/min	250 ml/min
WASH Speed	600 ml/min	500 ml/min	200 ml/min
EMPTY Speed	500 ml/min	500ml/min	300 ml/min
Conc Speed (not programmable)	500 ml/min	350 ml/min	150 ml/min
RETURN Speed (not programmable)	500 ml/min	500 ml/min	300 ml/min
Centrifuge speed	5650 rpm	5650 rpm	5250 rpm

Power off to exit the diagnostic mode.

Verify that S1 on the Expansion pcb is towards the P34 connector, NVRAM write-protect enabled.

Chapter 6, Disassembly

Contents

Paragraph		Page
6.1	DISASSEMBLY	6-2
6.1.1	IV pole	6-2
6.1.2	Centrifuge cover	6-2
6.1.3	Feed tube support arms	6-3
6.1.4	Control panel	6-5
6.1.5	Gas cylinder	6-6
6.1.6	Deck cover	6-6
6.1.7	Deck	6-6
6.1.8	Valves	6-7
6.1.9	Pump head assembly	6-7
6.1.10	Pump motor assembly	6-10
6.1.11	Motor generator	6-10
6.1.12	Optical switch	6-10
6.1.13	Pump cover switch assembly	6-11
6.1.14	Air detector	6-11
6.1.15	Centrifuge	6-11
6.1.16	Choke assembly	6-11
6.1.17	Motor plate assembly	6-14
6.1.18	Hall effect sensor assembly	6-14
6.1.19	Cover latch assembly	6-14
6.1.20	Centrifuge motor brushes	6-15
6.1.21	Cover latch air assembly	6-15
6.1.22	Optics assembly	6-16
6.1.23	Motor control pcb	6-16
6.1.24	Speaker assembly	6-16
6.1.25	O-ring removal and installation	6-17
6.1.26	Card cage printed circuit boards	6-17
6.1.27	Card cage	6-18
6.1.28	Transformer	6-19
6.1.29	Power supply interface pcb	6-21
6.1.30	Weigher	6-21
6.1.31	Power supply	6-21
6.1.32	Power switch	6-22
6.1.33	Fans	6-22
6.1.34	Air volume assembly	6-22
6.1.35	Compressor	6-22
6.1.36	Casters	6-22
6.1.37	Rear wheels	6-23

Contents

Figure		Page
6-1	Cell Saver 4 external components	6-3
6-2	Handle assembly	6-4
6-3	Removing the control panel	6-5
6-4	Deck components	6-8
6-5	Internal components	6-9
6-6	Centrifuge assembly	6-12
6-7	Rear view, centrifuge assembly	6-13
6-8	Removing the printed circuit boards	6-18
6-9	Cabinet components, view A	6-19
6-10	Cabinet components, view B	6-20

6.1 DISASSEMBLY

Disassembly of the Cell Saver 4 begins from the top down. First external components are removed, then the cover is removed, the deck is lifted off, and finally individual components within the cabinet are detached and lifted out. (See Figure 6-1.)

All references to front and back and right and left are from the perspective of a repair person facing the front panel of the machine. Also, the complete disassembly of the machine is given here. To replace a single component, go directly to the appropriate section.

6.1.1 IV pole (See Figure 6-2.)

1. Unscrew the two 5/32-inch button head Allen screws that attach the guide assembly to the top of the handle assembly.

2. Loosen the solution support knob.

3. Lift the guide assembly and the IV pole assembly out of the handle.

4. Remove the press pin at the bottom of the pole that retains the pole assembly inside the guide assembly.

5. Remove the IV pole assembly from the guide.

6.1.2. Centrifuge cover. Unscrew the two 5/32-inch Allen head screws located at the back of the cover and lift the cover off.

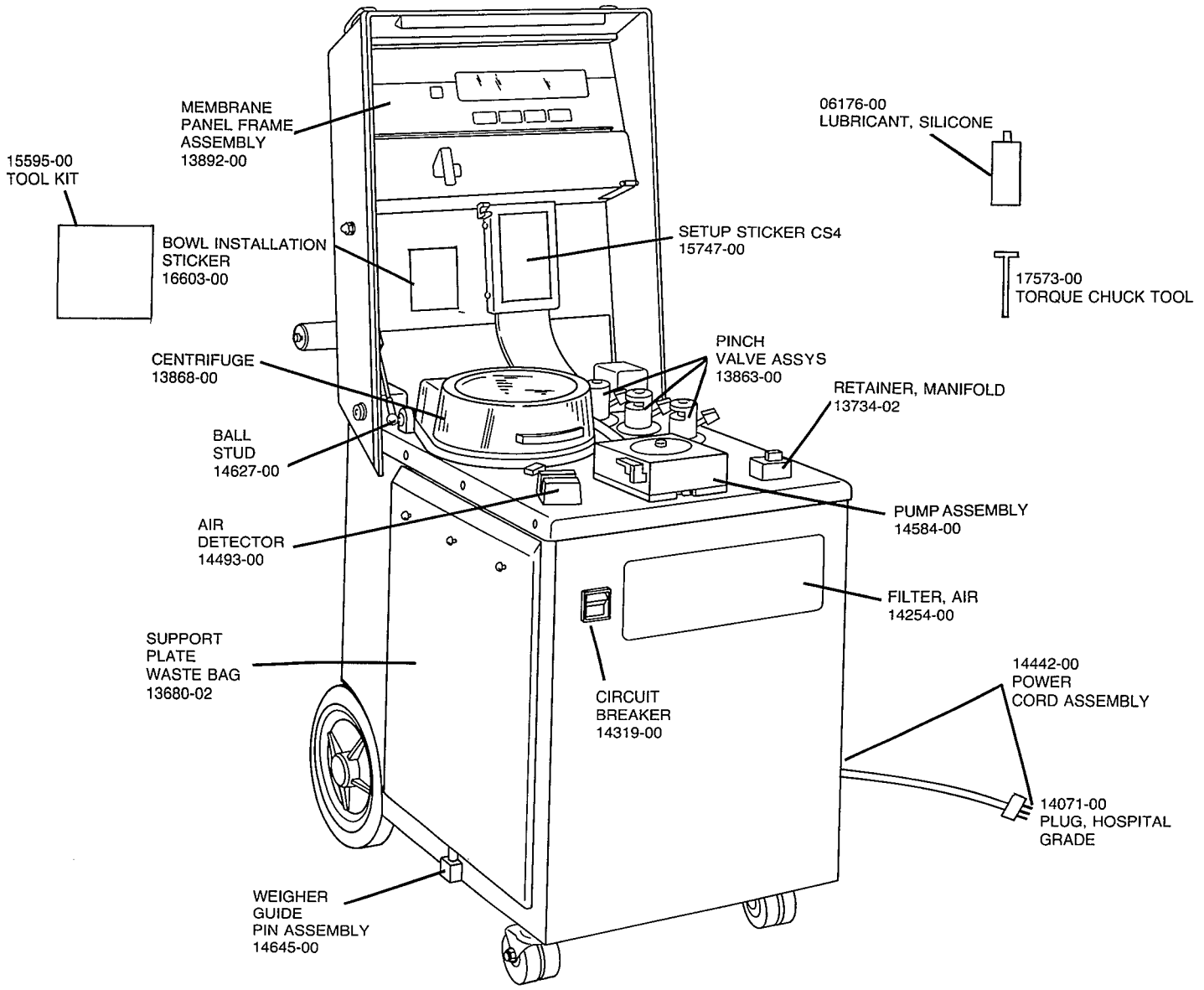

Figure 6-1, Cell Saver 4 external components

Warning

Do not run the machine with the centrifuge cover removed; the spinning centrifuge will be exposed. The machine will run with the cover removed, as long as the cover hinge is in place.

6.1.3 Feed tube support arms. Unscrew the 3/16-inch Allen head screws that hold the feed tube support arms in place and lift the arms off the posts.

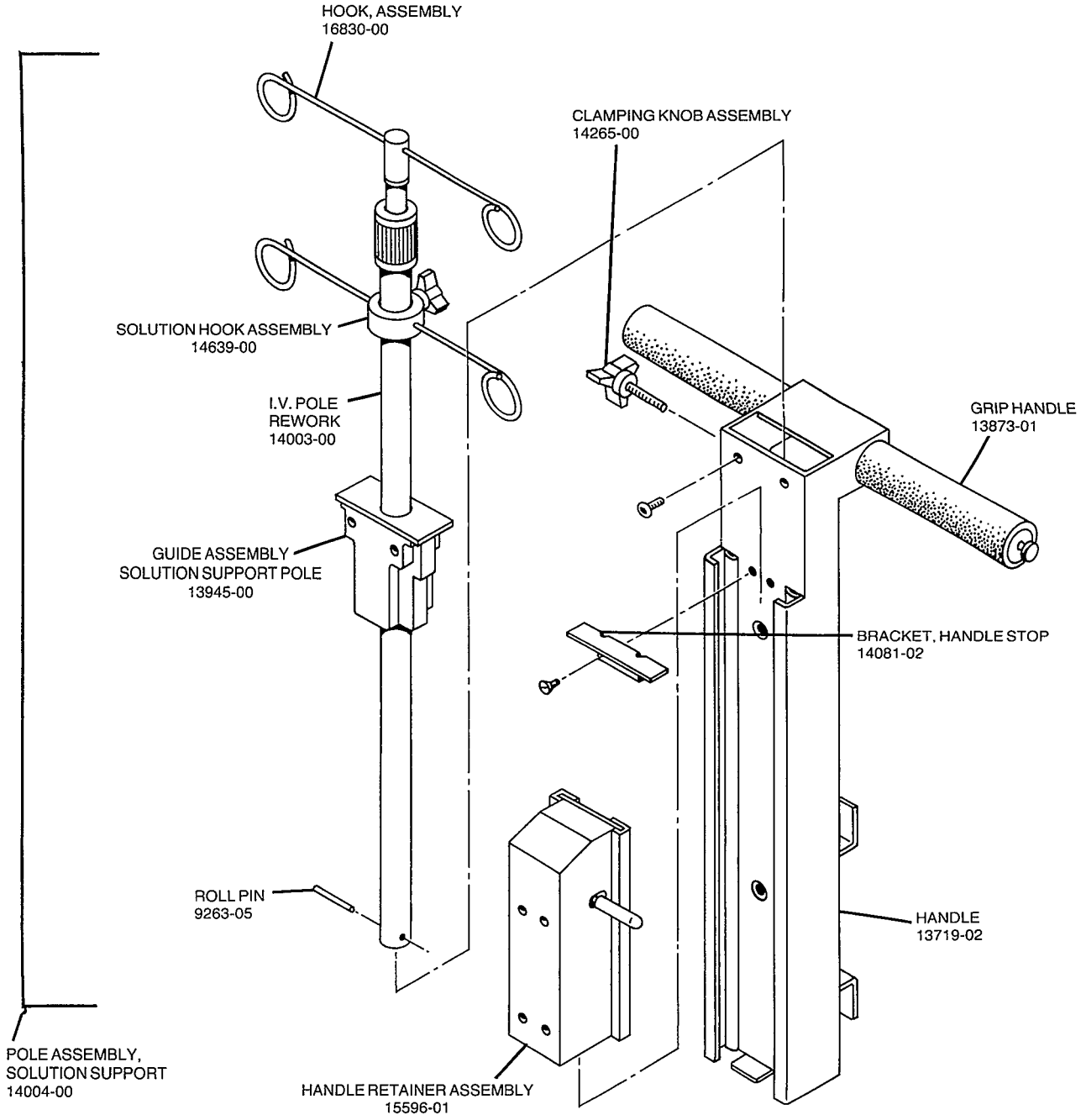

Figure 6-2, Handle assembly 14275-00

6.1.4 Control panel (See Figure 6-3.)

1. Remove the white shield that protects the wide, black, 60-pin ribbon cable that runs from the cabinet to the control panel. This shield is attached with four small Phillips screws.

2. Remove the red membrane panel door by unscrewing the two front hinge screws and loosening the back two. Move the hinges aside and lift off the door. Remove the back two hinge screws and hinges and place the hardware aside.

3. Remove the control panel by unscrewing the two inboard screws while supporting the panel. Tilt the control panel forward at the bottom and the top lip will slip away from the cover. Support the control panel, and carefully disconnect the wide black ribbon cable that is attached to a 60-pin connector on the control panel.

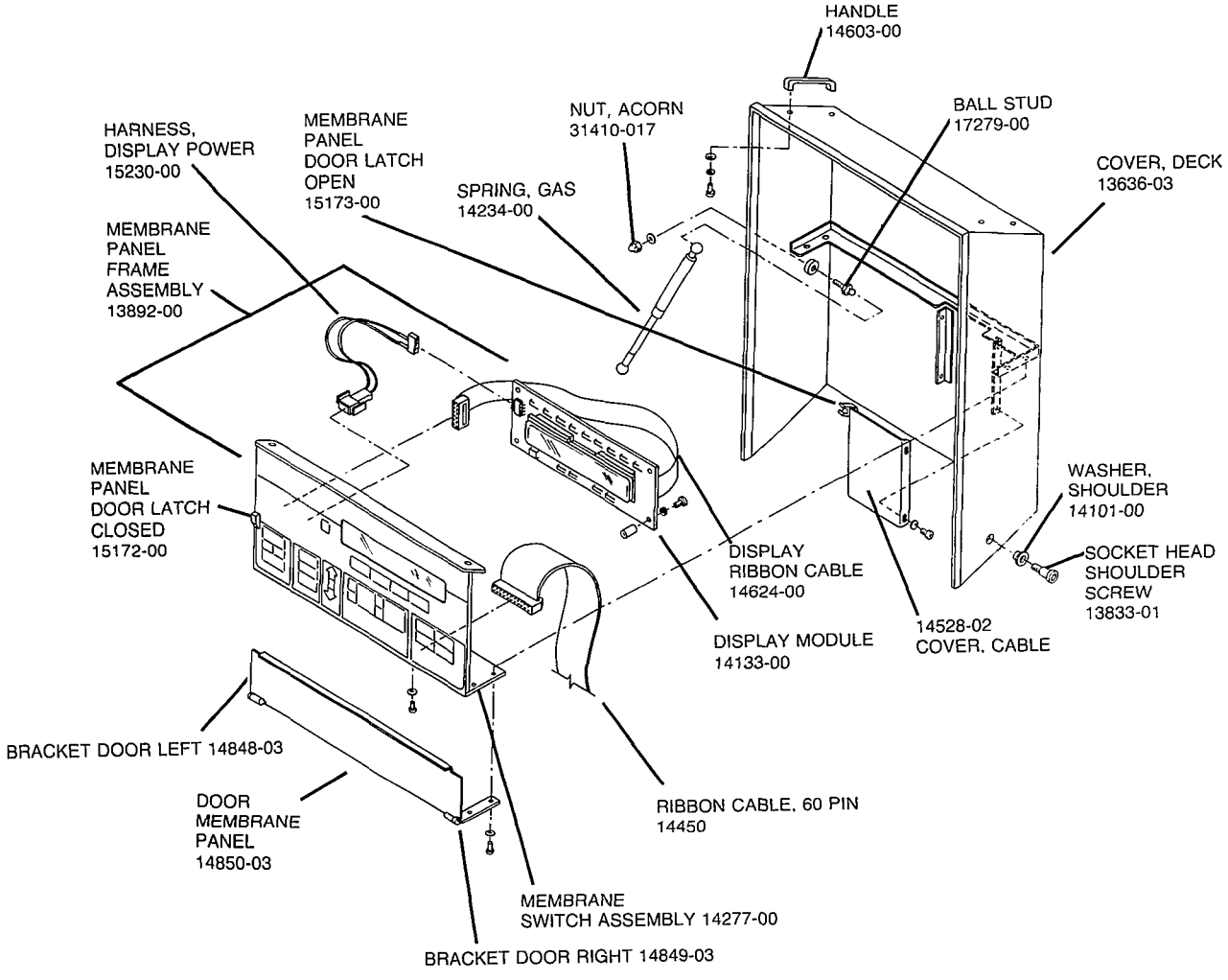

Figure 6-3, Removing the control panel

4. To remove the display panel pcb, disconnect the two cables that connect it to the display and then remove the four slotted screws that hold the display to the metal panel.

6.1.5 Gas cylinder. Twist the end nearest each coupling and push the cylinder away from the coupling.

6.1.6 Deck cover. Unscrew each of the two large 1/4-inch Allen head bolts that hinge the deck cover to the deck, being careful to support the cover. Although the cover is not heavy (it weighs roughly 15 lbs), it is bulky and awkward to handle when not supported by the gas cylinder and hinge bolts.

6.1.7 Deck

1. Loosen the black rubber centrifuge gasket and pry the gasket off.

2. Remove the 1/8th inch Allen-head screws that secure the deck to the cabinet. There are three on each side and four on the rear.

3. Remove the side access panel on the right (when facing the machine) of the CS4.

4. Loosen the retaining screws that secure the card cage in the upright position, and then pivot the card cage to the down position.

Caution

When pivoting the card cage be sure there are no obstructions.

5. Disconnect the cables and pneumatics (listed as follows) that are connected to components on the deck.
   - Pump motor/generator, 9-pin connector, P270
   - Pump cover interlock switch, 3-pin, J36
   - Air detector, 3-pin, P205
   - Centrifuge light, two spade lug connectors
   - Pneumatics, three color-coded quick disconnects

6. Disconnect the control panel 60-pin ribbon cable from the motherboard by first unscrewing one screw on the strain relief bar, then loosening the second screw, moving the bar out of the way, and finally unplugging the 60-pin connector (take care not to bend any pins).

7. After getting a good grip on the CS 4 deck, lift the entire unit straight up off the chassis being careful to clear the centrifuge well.cover. Place the deck cover on its side on a clean clear workspace.

Note: Figure 6-4 identifies the components located on the deck and should be referenced when using the sections which follow. Figure 6-5 identifies internal components.

6.1.8 Valves

1. Detach the valve lever by backing off the the small set screw that holds it in place.

2. Pry out the rubber gasket between the valve and the deck.

3. On the underside of the deck, detach the pneumatic tubing from the valve.

4. Unscrew the three socket head screws that secure the valve to the underside of the deck.

5. Push the valve out through the bottom of the deck.

6.1.9 Pump head assembly

1. On the top side of the pump head assembly loosen the screw in the center of the pump rotor. This screw is captive and does not require complete removal from the pump rotor.

2. Lift the rotor assembly straight up out of the pump head assembly.

3. The rollers may be removed for cleaning or replacement by unscrewing the two flat head screws that hold the rotor assembly together and separating the halves of the assembly.

4. Remove the two Allen screws at the corner of the pump head frame.

5. Lift the pump head frame straight up and off the deck.

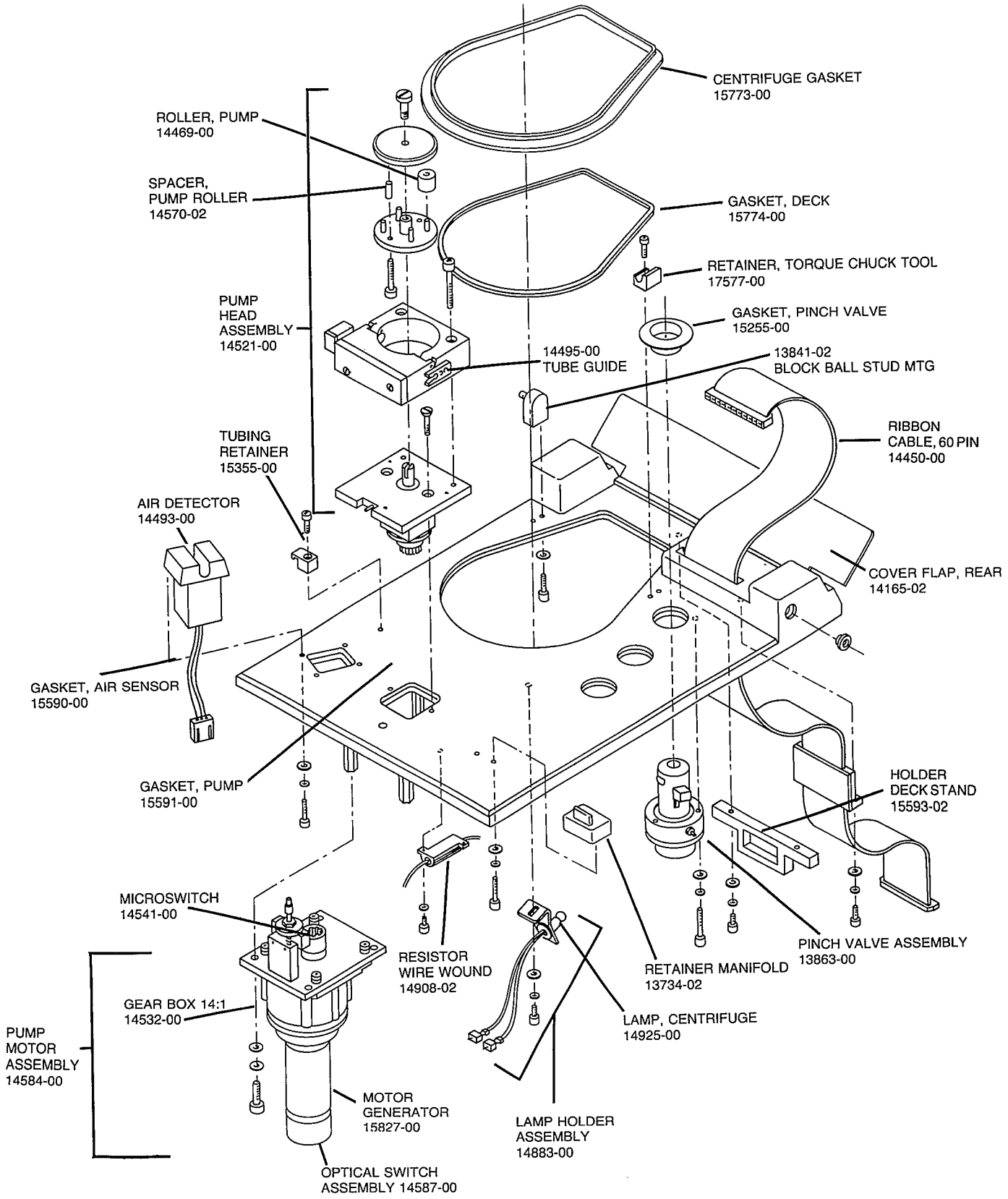

Figure 6-4, Deck components

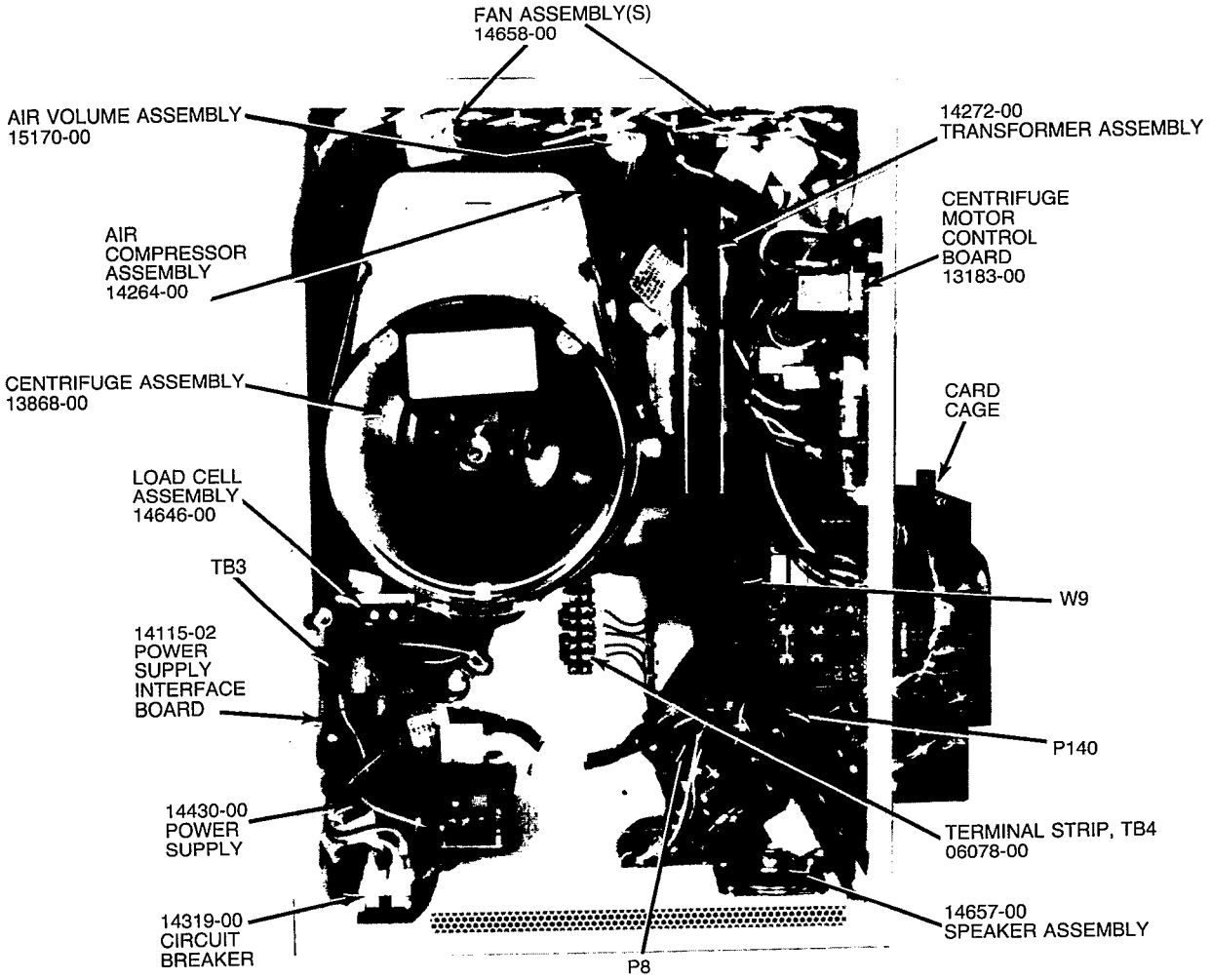

Figure 6-5, Internal components

6.1.10 Pump motor assembly

1. Remove the deck assembly. Refer to Section 6.1.7 for detailed instructions.

2. Locate the flexible coupling which connects the pump motor assembly to the pump head shaft. Loosen the 1/8-inch Allen head screws on the coupling that is furthest away from the pump motor.

3. Remove the two 3/32-inch Allen head bolts that attach the large power resistor to the bottom of the deck assembly.

4. Remove the four 3/16-inch Allen head bolts which attach the gearbox to the 3-inch long deck standoffs.

5. Remove the pump motor assembly.

6.1.11 Motor generator

1. Remove the deck assembly. Refer to Section 6.1.7 for detailed instructions.

2. Loosen and remove the two 5/32-inch Allen head bolts which attach the motor generator to the gearbox.

3. Lift the motor generator straight out of the gearbox, being careful not to damage the motor shaft.

6.1.12 Optical switch

1. Remove the deck assembly. Refer to Section 6.1.7 for detailed instructions.

2. Remove the two 7/64-inch Allen head bolts which attach the black sensor cover to the rear of the motor generator.

3. Remove the black cover from the motor generator.

4. Remove the two screws which hold the optical switch PCB to its mounting bracket.

5. Remove the optical switch assembly.

6.1.13 Pump cover switch assembly

1. Remove the pump motor assembly. Refer to Section 6.1.10 for detailed instructions.

2. Remove the two slotted head screws which hold the microswitch to its mounting bracket.

3. Remove the two orange/red wires and capacitor attached to the C and NO terminals of the microswitch.

6.1.14 Air detector

1. Remove the four pan head screws (found on the underside of the deck) that hold the air detector in place.

2. Lift the air detector out through the cutout in the deck.

3. Disconnect 3-pin connector, P205.

6.1.15 Centrifuge (See Figures 6-5, 6-6, 6-7.)

1. Remove the four 1/2-inch hex bolts on the underside of the cabinet.

2. Make the following disconnections:

   a. 4-pin latch connector, J67
   b. 4-pin centrifuge speed sensor, P301
   c. 3-pin centrifuge speed motor connector, J1, located on the centrifuge motor control PCB.
   d. Green/yellow ground wire from the top of the centrifuge casting.
   e. Green pneumatic line at quick disconnect.
   f. Optics interface PCB from the I/O PCB in the card rack. The optics PCB is attached to the I/O PCB by two screws.

3. Lift the centrifuge straight up gripping the underside of the top casting (centrifuge bucket).

6.1.16 Choke assembly

1. Remove the centrifuge assembly. Refer to Section 6.1.15 for detailed instructions.

2. Lay the centrifuge assembly on its side.

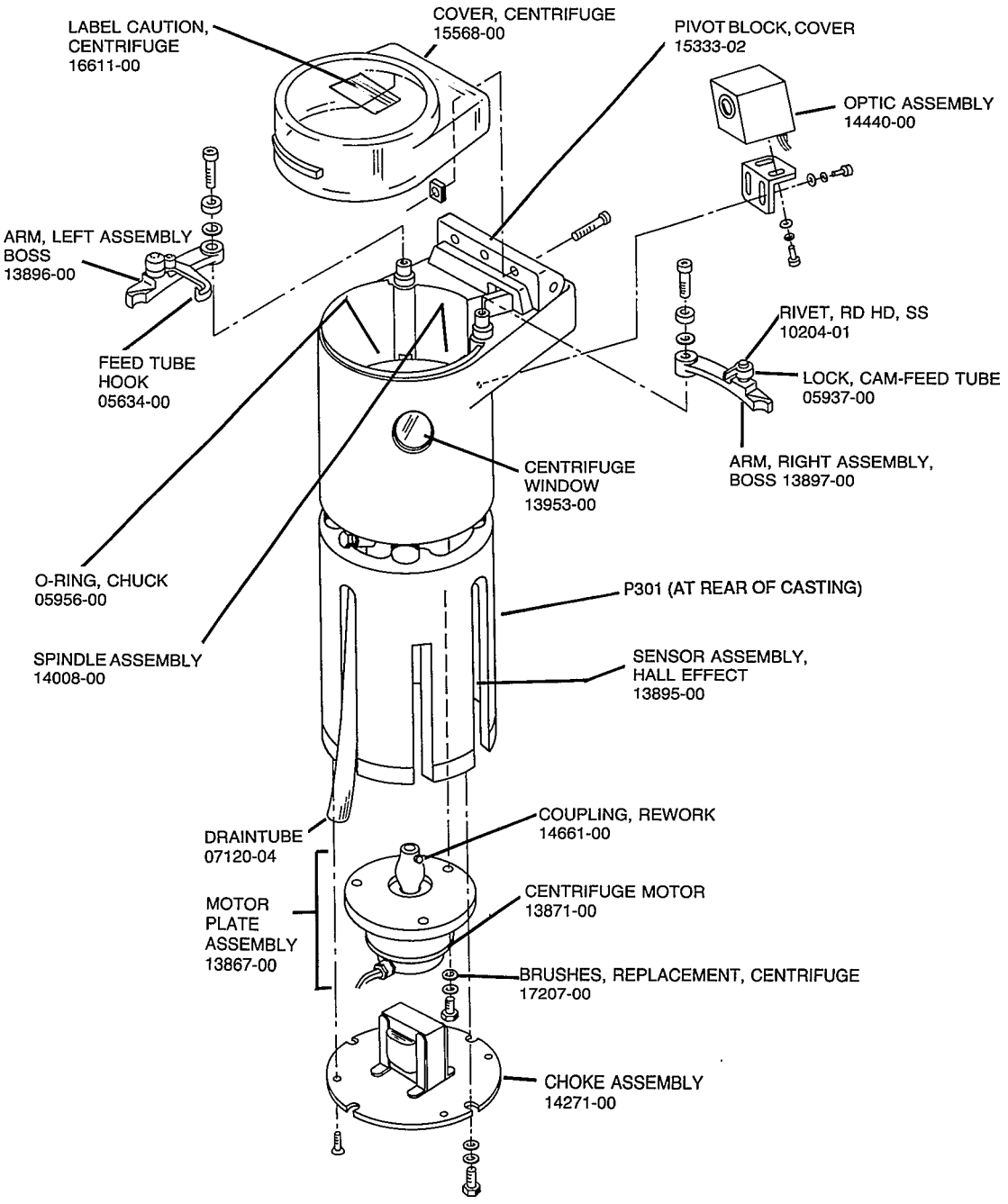

CENTRIFUGE ASSEMBLY 13868-00

Figure 6-6 Centrifuge assembly

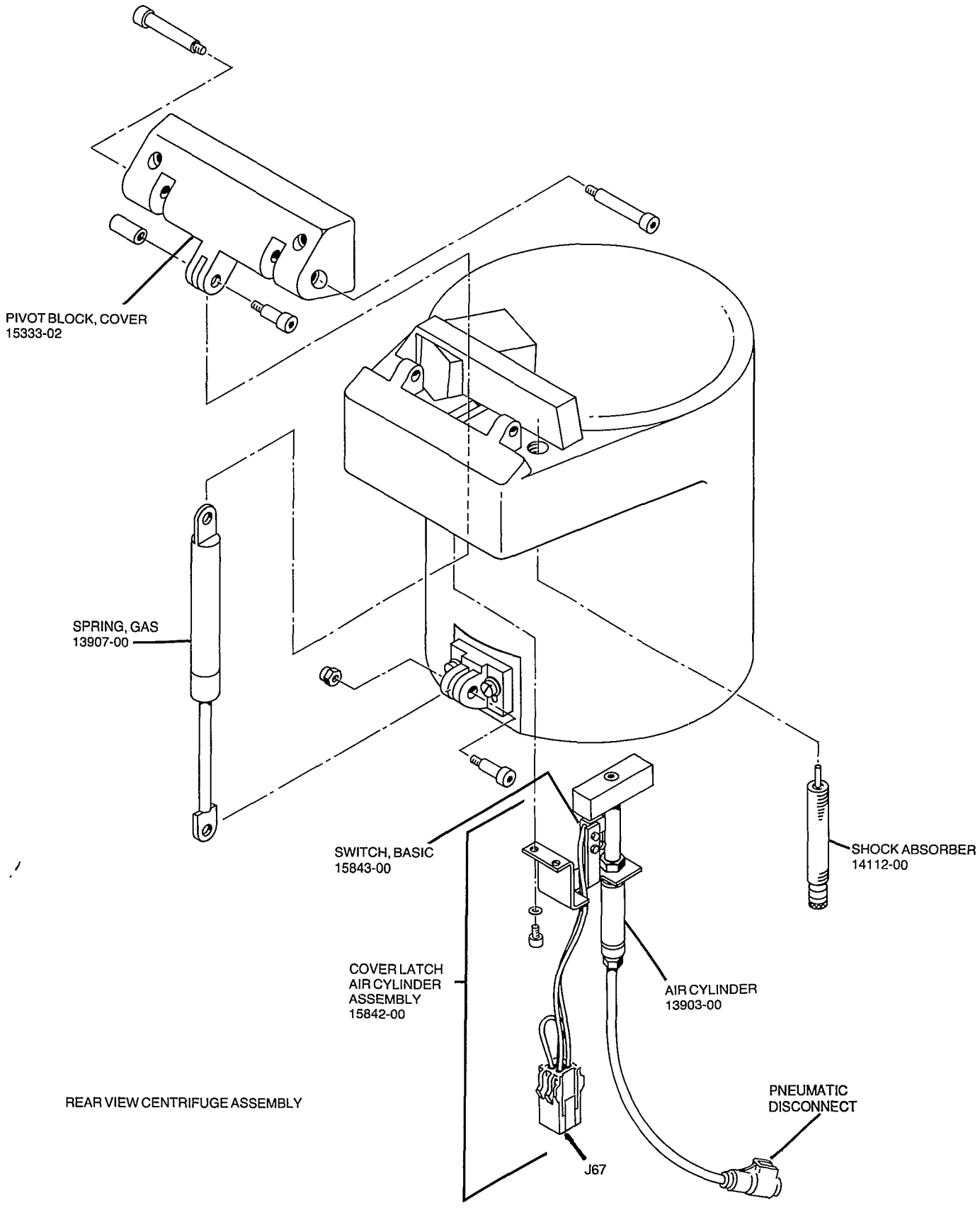

Figure 6-7, Rear view, centrifuge assembly

3. Remove the 4 flat head screws which attach the choke mounting plate to the very bottom of the centrifuge assembly.

4. Detach the two electrical slide connections associated with the choke. These two connections simply pull apart.

5. Remove the choke assembly from the centrifuge assembly.

6.1.17 Motor plate assembly

1. Remove the choke assembly. Refer to Section 6.1.16 for detailed instructions.

2. Looking through the long thin slots in the centrifuge base, locate the coupling which connects the motor to the centrifuge shaft.

3. Turn the centrifuge chuck by hand until the set screws line up with a slot in the centrifuge base.

4. Using an 1/8-inch Allen wrench loosen the Allen screw in the coupling furthest away from the motor. The screw will be sufficiently loose when the centrifuge can be turned without rotating the coupling.

5. Remove the three 1/2-inch hex head bolts that hold the motor plate assembly to the centrifuge assembly.

6. Remove the motor plate assembly from the centrifuge assembly.

6.1.18 Hall effect sensor assembly

1. Remove the motor plate assembly. Refer to Section 6.1.17 for detailed instructions.

2. Loosen the two 3/32-inch Allen head bolts that attach the Hall effect sensor to the centrifuge.

3. Remove the 4-pin connector, J301, from its mounting bracket by squeezing the 4 mounting ears together. Push the connector through the bracket towards the centrifuge assembly until the connector is free.
4. Remove the Hall effect sensor and cable from the centrifuge assembly.

6.1.19 Cover latch assembly

1. Remove the centrifuge assembly. Refer to Section 6.1.15 for detailed information.

2. Locate the cover latch assembly at the top rear of the centrifuge assembly. This assembly is easily identified by the green pneumatic line attached to it.

3. Remove both two 7/64-inch Allen head bolts which attach the cover latch assembly to the centrifuge assembly.

6.1.20 Centrifuge motor brushes

1. Remove the choke assembly. Refer to Section 6.1.16 for detailed instructions.

2. Remove the centrifuge motor access plate. This is accomplished by removing the three 7 mm Allen head bolts which attach the cover to the motor.

3. While pushing the motor wires through the bushing on the cover, rotate the cover away from the motor.

4. Remove the four brush assemblies from the centrifuge motor.

6.1.21 Cover latch air cylinder

1. Remove the cover latch assembly. Refer to Section 6.1.19 for detailed instructions.

2. Using pliers grip the metal cylinder that is attached to the air cylinder shaft and contact the microswitch activation arm.

3. While preventing this shaft from rotating, loosen and remove the 5/32-inch Allen head bolt from the top of the black delrin block.

4. Extend the air cylinder by pulling out on the metal cylinder referenced in Step 2. Continue to grip this metal cylinder and place a set of needle nose pliers on the thinner air cylinder shaft now exposed. Using the pliers, remove the larger cylinder which is threaded onto the air cylinder shaft.

5. Loosen and remove the large 9/16-inch bolt which attached the air cylinder to the bracket.

6. Remove the air cylinder from the bracket.

7. Using a 5/16-inch wrench, remove the pneumatic connection and tubing from the bottom of the air cylinder.

6.1.22 Optics assembly

1. Remove the centrifuge assembly. Refer to Section 6.1.15 for detailed Instructions.

2. Open the centrifuge cover and locate the optics assembly which projects from the side into the centrifuge bucket.

3. Locate the metal bar which partially covers the optics assembly and is positioned between the cover hinge and centrifuge bucket.

4. Remove this bar by loosening and removing two 9/64-inch Allen bolts which are located near the cover latch mechanism.

5. Remove the two 7/64-inch Allen bolts which attach the black optics bracket assembly to the centrifuge assembly. This bracket is also located in the same area as the cover latch assembly.

6. Remove the optics assembly and its cable from the centrifuge assembly.

6.1.23 Motor control pcb

1. Disconnect the following connectors:
   P1 — 3-pin
   P2 — 4-pin
   P121 — 3-pin
   W90 — ribbon cable

2. Remove the four slotted head screws and lift out.

6.1.24 Speaker assembly

1. Remove the side access panel and rotate out the card rack assembly.

2. Locate the speaker assembly which is mounted to the inside frame of the air filter assembly. The speaker can be seen by looking through the access opening above and to the left of the card rack assembly.

3. Using a 5/16-inch nut driver, remove the four screws that attach the speaker assembly to the machine. Be careful not to drop the nuts or lock washers onto the card rack or machine.

4. Disconnect the two slide terminal connections that are associated with the speaker assembly.

5. Remove the speaker assembly from the machine.

6.1.25 O-ring removal and installation

Remove the O-ring

1. Loosen the three chuck screws.

2. If a bowl is installed in the centrifuge chuck, remove it.

3. Remove the O-ring with a hemostat or needle nose pliers.

4. Inspect the O-ring. Replace is it is nicked, gouged, or worn.

5. Clean the O-ring with water. Dry and set aside.

6. Clean the O-ring space with damp cotton swabs.

Install the O-ring

1. Lubricate the O-ring using silicone lubricant. Put a small amount on a finger and thumb, coating all surfaces lightly.

2. Replace the O-ring into the ring space. Run a finger around the O-ring space to make sure it is flat in space. The O-ring may appear too large to fit, but it can be manipulated into place.

6.1.26 Card cage printed circuit boards

Remove all of the following cards using the card ejectors as shown in Figure 6-8.

1. Disconnect the ribbon cables W30 and W31 at both ends and slide out the I/O pcb.

2. Remove the optics pcb from the I/O pcb.

3. Remove the I/O pcb.

4. Slide out the expansion pcb 4 inches.

5. Remove J33 (undo locking clamps) on the Expansion board.

6. Remove the Expansion board.

7. Remove the CPU pcb.

8. Disconnect the large 24-pin connectors, J140, at the rear of the card cage and above the Driver boards.

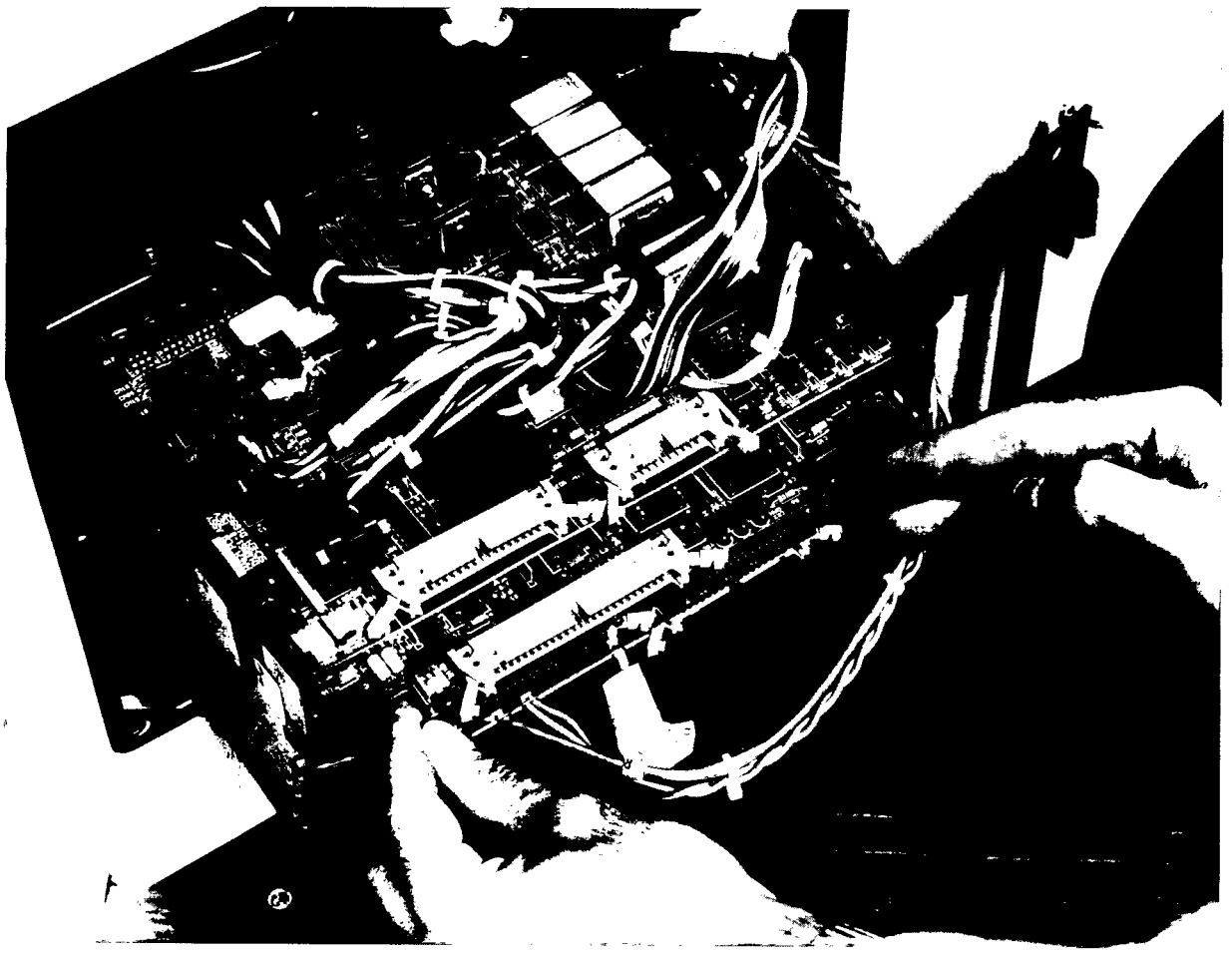

Figure 6-8, Removing printed circuit cards

9. Disconnect the pneumatics connector which is attached to the valves on the Drive board. There are two captive screws which must be loosened to accomplish this task.

10. Remove the Driver board.

6.1.27 Card cage

1. Remove the four socket head screws from the base.

2. Lift out the cage.

Figure 6-9 is an exploded view of the cabinet and components. Other cabinet components are shown in Figure 6-10.

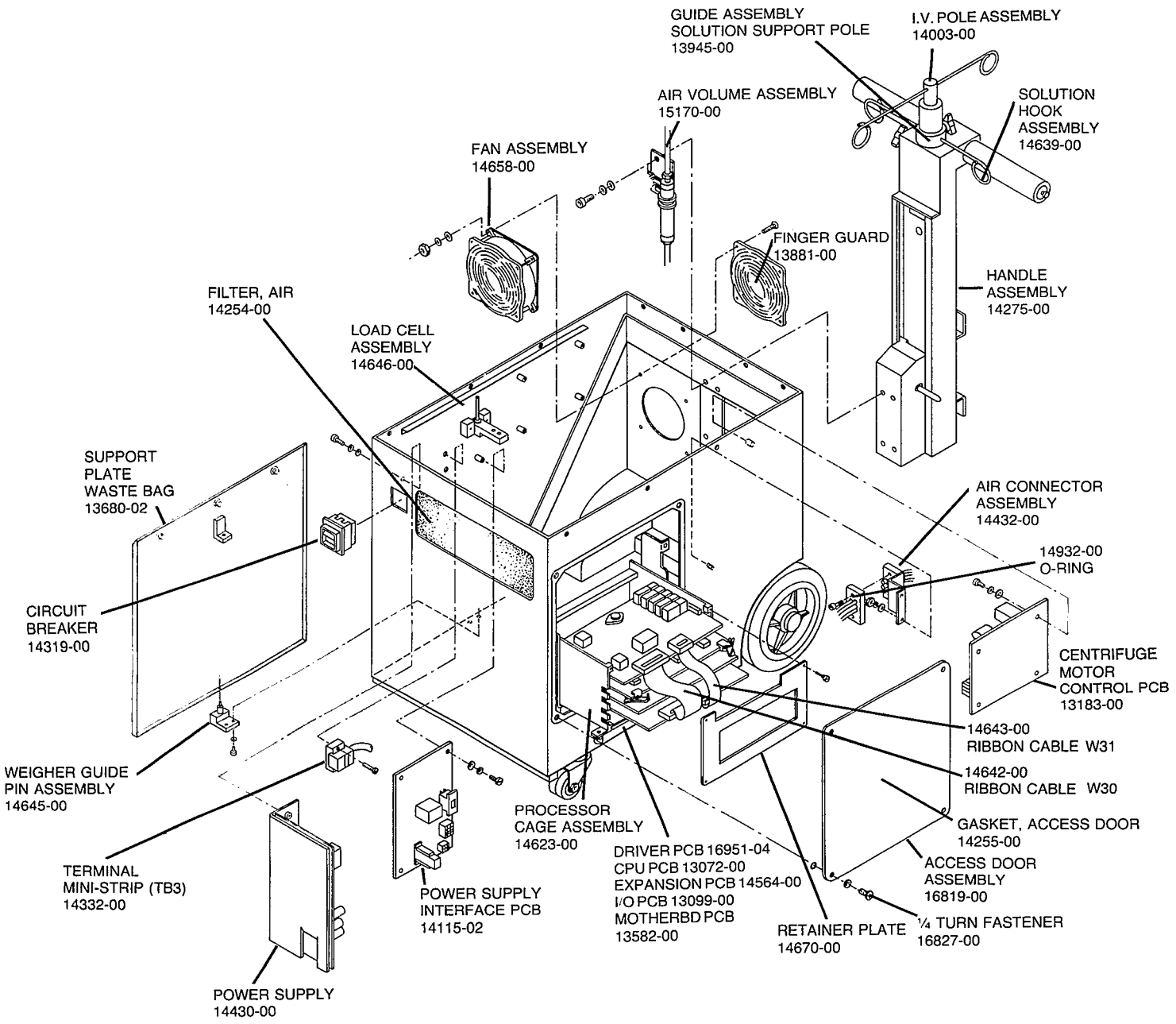

Figure 6-9, Exploded view of cabinet components, view A

6.1.28 Transformer

1. Disconnect P 130 from power supply interface pcb. Disconnect Pin 1 (black) and Pin 3 (white) from P130, and disconnect J135 from the power supply interface pcb.

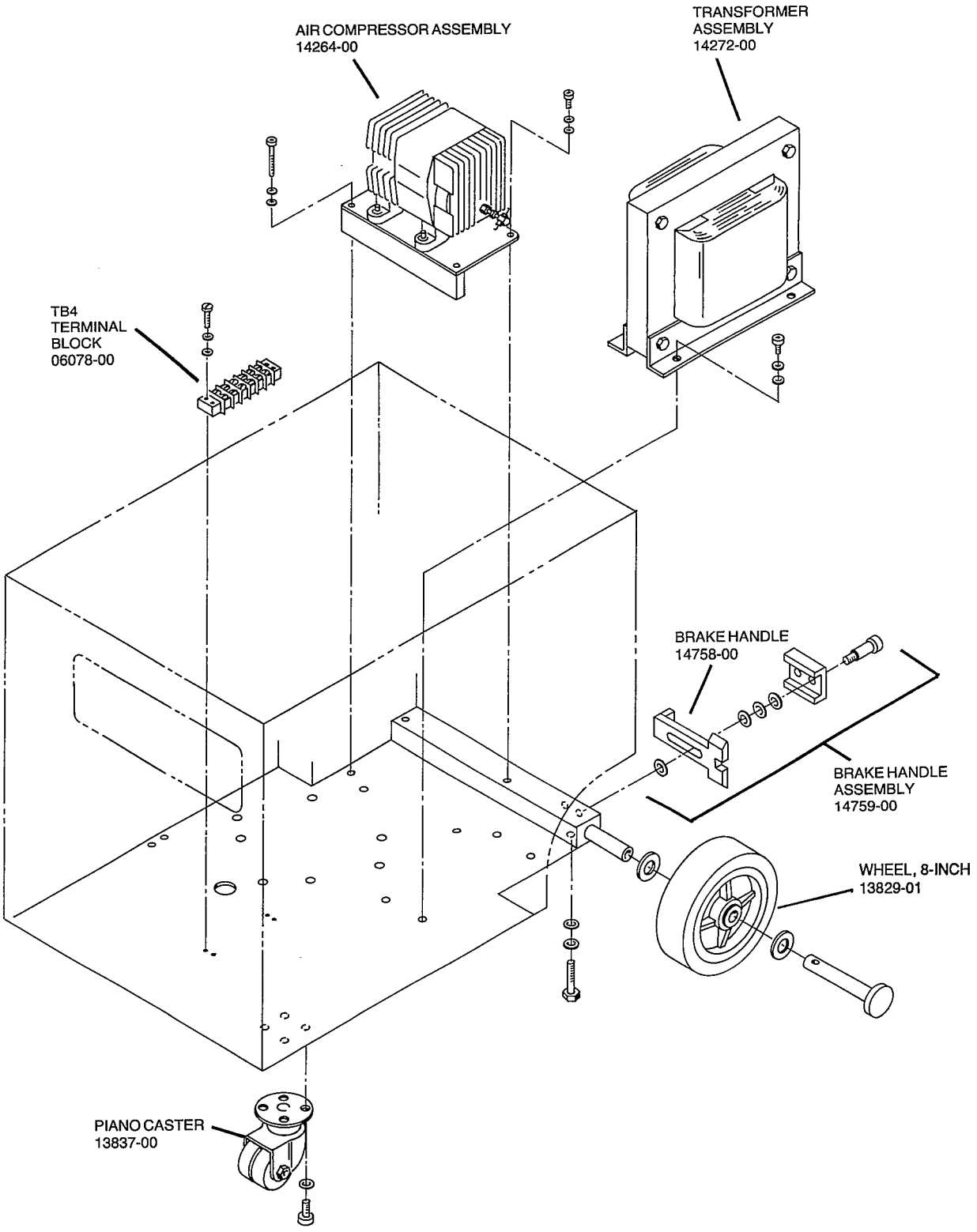

Figure 6-10, Cabinet components, view B

2. Remove the four socket head screws that secure the transformer to the base.

3. Lift the transformer straight up and out of the cabinet.

6.1.29 Power supply interface pcb

1. Disconnect the following connections from the power supply interface pcb:

A. P130	12-pin connector
B. J135	6-pin connector
C. P115	3-pin connector
D. P100	4-pin connector
E. P110	12-pin connector

2. Remove the four slotted head screws that secure the pcb to the cabinet and lift out the pcb.

6.1.30 Weigher

1. Remove the nut on the spring-loaded, threaded shaft located at the top inside of the cabinet on the same mounting as the load cell.

2. Remove the two socket-head load cell mounting screws.

3. Disconnect the load cell connector; the load cell is now free and may be lifted out.

4. Unscrew the nut on the bottom of the spring-loaded, threaded shaft.

5. Remove the threaded shaft.

6. Pull the weigher shroud up and out.

7. Replace the weigher by reversing the above steps, but leave a 3/4-inch spacing from the top of the flat washer underneath the nut to the top of the load cell. When replacing the threaded shaft, apply a light coating of lubricating oil to the unthreaded section of the shaft. Check the calibration using the service procedure for the waste bag weigher found in Chapter 5. Precise calibration of the weigher is not necessary. The weigher' function is to indicate when the waste bag is nearly full.

6.1.31 Power supply

1. Detach the (AC in) wiring, labeled G, LOW, and HIGH, at the top of the power supply.

2. Remove the red, molded plastic, (DC output) wiring connector located near the card cage.

3. Remove the two mounting screws on the outside of the cabinet. The weigher shroud must be removed, to gain access to these screws. See the waste bag weigher removal section in 6.1.30.

6.1.32 Power switch

1. Disconnect the spade lugs from the power switch.

2. Remove the power switch by disengaging the retainer clips and pushing the switch through the cutout in the cabinet.

6.1.33 Fans

Repeat the following procedure for each fan.

1. Remove the 3-pin connector to the fan.

2. From the outside of the cabinet remove the four screws that secure the fan to the cabinet.

3. Remove the finger guard and pull the fan out from inside the cabinet.

6.1.34 Air volume assembly.

1. Disconnect the pneumatic tubing from the air volume assembly.

2. Remove the nut holding the clamp and lift out the air volume assembly.

6.1.35 Compressor

1. Remove the pneumatic tubing from the fitting.

2. Disconnect the 3-pin connector.

3. Remove the four socket-head mounting screws.

4. Pull the compressor straight up and out of the cabinet.

6.1.36 Casters

Remove the four socket head screws and the casters are free of the chassis.

6.1.37 Rear wheels

1. Remove the 7/16 hex-head bolts.
2. Slide the wheel retainer/axle out of the cabinet.
3. The wheels and Teflon washers can now be removed.

Chapter 7
Parts List

Contents

Paragraph		Page
7.1	ORDERING INFORMATION	7-1
7.1 1	Alphabetical order	7-1
7.1.2	Numerical order	7-4

The parts used in the Cell Saver 4 are listed below, first in alphabetical order and then in numerical order. Current prices may be obtained and parts may be ordered by writing to Haemonetics Corporation, 400 Wood Road, Braintree, Massachusetts 02848 or by calling 800-634-8010 outside of Massachusetts and within the United States. Within Massachusetts and outside of the United States, call 617-848-7100.

7.1.1 Alphabetical order

Description	Part No.	Page No.
1/4 Turn Fasteners	16827-00	6-19
Access Door Assembly	16819-00	6-19
Air Compressor Assembly	14264-00	6-20
Air Connector Assembly	14432-00	6-19
Air Cylinder	13903-00	6-13
Air Sensor Assembly, 3/8 OD Tubing	14493-00	6-3, 6-7
Air Volume Assembly	15170-00	6-19
Arm, Left Assembly, Boss	13896-00	6-12
Arm, Right Assembly, Boss	13897-00	6-12
Ball Stud	14627-00	6-3
Ball Stud	17279-00	6-4
Block Ball Stud Mtg.	13841-02	6-7
Bowl Installation Sticker	16603-00	6-3
Bracket Door Left	14848-03	6-4
Bracket Door Right	14849-03	6-4
Bracket, handle stop	14081-02	6-8
Brake Handle	14758-00	6-20
Brake Handle Assembly	14759-00	6-20
Brushes, Replacement, Centrifuge	17207-00	6-12
Centrifuge Assembly	13868-00	6-3, 6-12
Centrifuge Motor	13871-00	6-12
Centrifuge Motor Control PCB Assembly	13183-00	6-19

Description	Part No.	Page No.
Centrifuge, Gasket	15773-00	6-7
Choke Assembly	14271-00	6-12
Circuit Breaker	14319-00	6-3, 6-19
Clamping knob assembly	14265-00	6-8
Coupling, Rework	14661-00	6-12
Cover Flap Rear	14165-02	6-7
Cover Latch, Air Cylinder Assembly	15842-00	6-13
Cover, Cable	14528-02	6-4
Cover, Centrifuge	15568-00	6-12
Cover, Deck	13636-03	6-4
Display Module Vacuum Fluorescent	14133-00	6-4
Display, Ribbon Cable	14624-00	6-4
Door Access Gasket	14255-00	6-19
Door Membrane Panel	14850-03	6-4
Drain Tube	07120-04	6-12
Expansion PCB Assembly	14564-00	6-19
Fan, Assembly	14658-00	6-19
Filter, Air	14254-00	6-3, 6-19
Finger Guard	13881-00	6-19
Gasket pinch valve	15255-00	6-7
Gasket, Air Sensor	15590-00	6-7
Gasket, Deck	15774-00	6-7
Gasket, Pump	15591-00	6-7
Gear Box, 14:1	14532-00	6-7
Grip, handle	13873-01	6-8
Guide Assembly, Solution Support Pole	13945-00	6-8, 6-19
Guide PCB	11307-02	2-13
Handle	13719-02	6-8
Handle	14603-00	6-4
Handle Assembly	14275-00	6-8, 6-19
Handle retainer assembly	15596-01	6-8
Harness, display power	15230-00	6-4
Holder, Deck Stand	15593-02	6-7
Hook assembly	16830-00	6-8
Hook, Feed Tube	05634-00	6-12
I.V. pole assembly	14003-00	6-8, 6-19
IC, NON VOL RAM (BAT)	15229-00	2-27
Label Caution, Centrifuge	16611-00	6-12
Lamp Holder Assembly	14883-00	6-7
Lamp, Centrifuge	14925-00	6-7
Load Cell Assembly	14646-00	6-19
Lock, Cam-Feed Tube	05937-00	6-12
Lubricant, Silicone	06176-00	6-3
Main Program, Part 1	14637-01	2-14

Description	Part No.	Page No.
Main Program, Part 2	14637-02	2-14
Main Program, Part 3	14637-03	2-27
Main Program, Part 4	14637-04	2-27
Main Program, Part 5	14637-05	2-27
Membrane Panel Frame Assembly	13892-00	6-3, 6-4
Membrane panel, door latch closed	15172-00	6-4
Membrane panel, door latch open	15173-00	6-4
Membrane Switch Assembly	14277-00	6-4
Micro Switch	14541-00	6-7
Mother PCB Assembly	13582-00	6-19
Motor Generator	15827-00	6-7
Motor Plate Assembly	13867-00	6-12
Nut, Acorn	31410-017	6-4
O Ring, Chuck	05956-00	6-12
O-Ring	14932-00	6-19
Optic Assembly	14440-00	6-12
Optical Switch Assembly	14587-00	6-7
Owner's Operating Manual	15346-00	—
Piano caster	13837-00	6-20
Pinch Valve Assy	13863-00	6-3, 6-7
Pivot Block, Cover	15333-02	6-12,6-13
Plug, Hospital Grade	14071-00	6-3
Pole Assembly Solution Support	14004-00	6-8
Power Cord Assembly	14442-00	6-3
Power Supply	14430-00	6-19
Power Supply Interface PCB	14115-02	6-19
Processor CPU PCB Assembly	13072-00	6-19
Processor Driver PCB Assembly	16951-04	6-19
Processor, Cage Assembly	14623-00	6-19
Processor, I/O PCB Assembly	13099-00	6-19
Program, Motor Control	13471-00	2-33
Pump Head Assembly	14521-00	6-7
Pump Motor Assembly	14584-00	6-3, 6-7
Pump Roller	14469-00	6-7
Relay	13203-00	8-
Resistor, Wire Wound	14908-02	6-7
Retainer Plate	14670-00	6-19
Retainer Wheel	13660-02	6-20
Retainer, Torque Chuck Tool	17577-00	6-7
Retainer, Manifold	13734-02	6-3, 6-7
Ribbon Cable W30	14642-00	6-19
Ribbon Cable W31	14643-00	6-19
Ribbon Cable, 60-Pin	14450-00	6-4, 6-7
Rivet, RD HD, SS	10204-01	6-12

Description	Part No.	Page No.
Roll pin	09263-05	6-8
Sensor Assembly, Hall Effect	13895-00	6-12
Service Manual	17893-00	—
Set Up Sticker CS4	15747-00	6-3
Shock Absorber	14112-00	6-13
Socket Head Shoulder Screw	13833-01	6-4
Solenoid Valve	13131-00	2-60
Solution Support Hook Assembly	14639-00	6-8, 6-19
Spacer, Pump Roller	14570-02	6-7
Speaker Assembly	14657-00	6-9
Spindle, Assembly	14008-00	6-12
Spring, Gas	14234-00	6-4
Spring, gas	13907-00	6-13
Support Plate Waste Bag	13680-02	6-3, 6-19
Switch, Basic	15843-00	6-13
Terminal Strip, TB4	06078-00	6-20
Terminal, Mini-Strip (TB3)	14332-00	6-19
Tool kit	15595-00	6-3
Torque Chuck Tool	17573-00	6-3
Transformer Assembly	14272-00	6-20
Tube Guide	14495-00	6-7
Tubing Retainer	15355-00	6-7
Urethane Hose Yellow	13124-08	2-60
Urethane Hose, Blue	13124-02	2-60
Urethane Hose, Red	13124-06	2-60
Washer, Shoulder	14101-00	6-4
Weigher Guide Pin Assembly	14645-00	6-3, 6-19
Wheel, 8-inch diameter	13829-01	6-20
Window, Centrifuge	13953-00	6-12

7.1.2 Numerical order

Part No.	Page No.	Description
05634-00	6-12	Hook, Feed Tube
05937-00	6-12	Lock, Cam-Feed Tube
05956-00	6-12	O Ring, Chuck
06078-00	6-20	Terminal Strip, TB4
06176-00	6-3	Lubricant, Silicone
07120-04	6-12	Drain Tube
09263-05	6-8	Roll pin
10204-01	6-12	Rivet, RD HD, SS
11307-02	2-13	Guide PCB
13072-00	6-19	Processor CPU PCB Assembly

Part No.	Page No.	Description
13099-00	6-19	Processor, I/O PCB Assembly
13124-02	2-60	Urethane Hose, Blue
13124-06	2-60	Urethane Hose, Red
13124-08	2-60	Urethane Hose Yellow
13131-00	2-60	Solenoid Valve
13183-00	6-19	Centrifuge Motor Control PCB Assembly
13203-00	8-	Relay
13471-00	2-33	Program, Motor Control
13582-00	6-19	Mother PCB Assembly
13636-03	6-4	Cover, Deck
13660-02	6-20	Retainer Wheel
13680-02	6-3, 6-19	Support Plate Waste Bag
13719-02	6-8	Handle
13734-02	6-3, 6-7	Retainer, Manifold
13829-01	6-20	Wheel, 8-inch diameter
13833-01	6-4	Socket Head Shoulder Screw
13837-00	6-20	Piano caster
13841-02	6-7	Block Ball Stud Mtg.
13863-00	6-3, 6-7	Pinch Valve Assy
13867-00	6-12	Motor Plate Assembly
13868-00	6-3, 6-12	Centrifuge Assembly
13871-00	6-12	Centrifuge Motor
13873-01	6-8	Grip, handle
13881-00	6-19	Finger Guard
13892-00	6-3, 6-4	Membrane Panel Frame Assembly
13895-00	6-12	Sensor Assembly, Hall Effect
13896-00	6-12	Arm, Left Assembly, Boss
13897-00	6-12	Arm, Right Assembly, Boss
13903-00	6-13	Air Cylinder
13907-00	6-13	Spring, gas
13945-00	6-8, 6-19	Guide Assembly, Solution Support Pole
13953-00	6-12	Window, Centrifuge
14003-00	6-8, 6-19	I.V. pole assembly
14004-00	6-8	Pole Assembly Solution Support
14008-00	6-12	Spindle, Assembly
14071-00	6-3	Plug, Hospital Grade
14081-02	6-8	Bracket, handle stop
14101-00	6-4	Washer, Shoulder
14112-00	6-13	Shock Absorber
14115-02	6-19	Power Supply Interface PCB
14133-00	6-4	Display Module Vacuum Fluorescent
14165-02	6-7	Cover Flap Rear
14234-00	6-4	Spring, Gas
14254-00	6-3, 6-19	Filter, Air
14255-00	6-19	Door Access Gasket

Part No.	Page No.	Description
14264-00	6-20	Air Compressor Assembly
14265-00	6-8	Clamping knob assembly
14271-00	6-12	Choke Assembly
14272-00	6-20	Transformer Assembly
14275-00	6-8, 6-19	Handle Assembly
14277-00	6-4	Membrane Switch Assembly
14319-00	6-3, 6-19	Circuit Breaker
14332-00	6-19	Terminal, Mini-Strip (TB3)
14430-00	6-19	Power Supply
14432-00	6-19	Air Connector Assembly
14440-00	6-12	Optic Assembly
14442-00	6-3	Power Cord Assembly
14450-00	6-4, 6-7	Ribbon Cable, 60-Pin
14469-00	6-7	Pump Roller
14493-00	6-3, 6-7	Air Sensor Assembly, 3/8 OD Tubing
14495-00	6-7	Tube Guide
14521-00	6-7	Pump Head Assembly
14528-02	6-4	Cover, Cable
14532-00	6-7	Gear Box, 14:1
14541-00	6-7	Micro Switch
14564-00	6-19	Expansion PCB Assembly
14570-02	6-7	Spacer, Pump Roller
14584-00	6-3, 6-7	Pump Motor Assembly
14587-00	6-7	Optical Switch Assembly
14603-00	6-4	Handle
14623-00	6-19	Processor, Cage Assembly
14624-00	6-4	Display, Ribbon Cable
14627-00	6-3	Ball Stud
14637-01	2-14	Main Program, Part 1
14637-02	2-14	Main Program, Part 2
14637-03	2-27	Main Program, Part 3
14637-04	2-27	Main Program, Part 4
14637-05	2-27	Main Program, Part 5
14639-00	6-8, 6-19	Solution Support Hook Assembly
14642-00	6-19	Ribbon Cable W30
14643-00	6-19	Ribbon Cable W31
14645-00	6-3, 6-19	Weigher Guide Pin Assembly
14646-00	6-19	Load Cell Assembly
14657-00	6-9	Speaker Assembly
14658-00	6-19	Fan, Assembly
14661-00	6-12	Coupling, Rework
14670-00	6-19	Retainer Plate
14758-00	6-20	Brake Handle
14759-00	6-20	Brake Handle Assembly

Part No.	Page No.	Description
14848-03	6-4	Bracket Door Left
14849-03	6-4	Bracket Door Right
14850-03	6-4	Door Membrane Panel
14883-00	6-7	Lamp Holder Assembly
14908-02	6-7	Resistor, Wire Wound
14925-00	6-7	Lamp, Centrifuge
14932-00	6-19	O-Ring
15170-00	6-19	Air Volume Assembly
15172-00	6-4	Membrane panel, door latch closed
15173-00	6-4	Membrane panel, door latch open
15229-00	2-27	IC, NON VOL RAM (BAT)
15230-00	6-4	Harness, display power
15255-00	6-7	Gasket, pinch valve
15333-02	6-12, 6-13	Pivot Block, Cover
15346-00	—	Owner's Operating Manual
15355-00	6-7	Tubing Retainer
15568-00	6-12	Cover, Centrifuge
15590-00	6-7	Gasket, Air Sensor
15591-00	6-7	Gasket, Pump
15593-02	6-7	Holder, Deck Stand
15595-00	6-3	Tool kit
15596-01	6-8	Handle retainer assembly
15747-00	6-3	Set Up Sticker CS4
15773-00	6-7	Centrifuge, Gasket
15774-00	6-7	Gasket, Deck
15827-00	6-7	Motor Generator
15842-00	6-13	Cover Latch, Air Cylinder Assembly
15843-00	6-13	Switch, Basic
16603-00	6-3	Bowl Installation Sticker
16611-00	6-12	Label Caution, Centrifuge
16819-00	6-19	Access Door Assembly
16827-00	6-19	1/4 Turn Fasteners
16830-00	6-8	Hook assembly
16951-04	6-19	Processor Driver PCB Assembly
17207-00	6-12	Brushes, Replacement, Centrifuge
17279-00	6-4	Ball Stud
17573-00	6-3	Torque Chuck Tool
17577-00	6-7	Retainer, Torque Chuck Tool
17893-00	—	Service manual
31410-017	6-4	Nut, Acorn

Chapter 8, Schematics and assembly drawings

Contents

Listed below are the schematics and assembly drawings that may be found in the following pages.

Part No.	Description	
14244	CS4 System Schematic	8-2
14246	CS4 Pneumatic Schematic	8-3
13074	CPU PCB Schematic	8-4, 8-5
13072	CPU PCB Assembly	8-6
13072	CPU PCB BOM	8-7 thru 8-9
13101	I/O PCB Schematic	8-10 thru 8-12
13099	I/O PCB Assembly	8-13
13099	I/O PCB BOM	8-14 thru 8-17
14565	Expansion PCB Schematic	8-18 thru 8-21
14564	Expansion PCB Assembly	8-22
14564	Expansion PCB BOM	8-23 thru 8-26
16952	Driver PCB Schematic	8-27 thru 8-29
16951-04	Driver PCB Assembly	8-30, 8-31
16951-04	Driver PCB BOM	8-32 thru 8-35
13185	Centrifuge Motor Control PCB Schematic	8-36
13183	Centrifuge Motor Control PCB Assembly	8-37
13183	Centrifuge Motor Control PCB BOM	8-38 thru 8-40
14116-02	Power Supply Interface Schematic	8-41
14116-02	Power Supply Interface Assembly	8-42
14115-02	Power Supply Interface BOM	8-43
13583	Motherboard PCB Schematic	8-44
13582	Motherboard PCB Assembly	8-45
13582	Motherboard PCB BOM	8-46
14277	Membrane Switch	8-47, 8-48
14253	Transformer	8-49
14430	Power Supply	8-50 thru 8-52

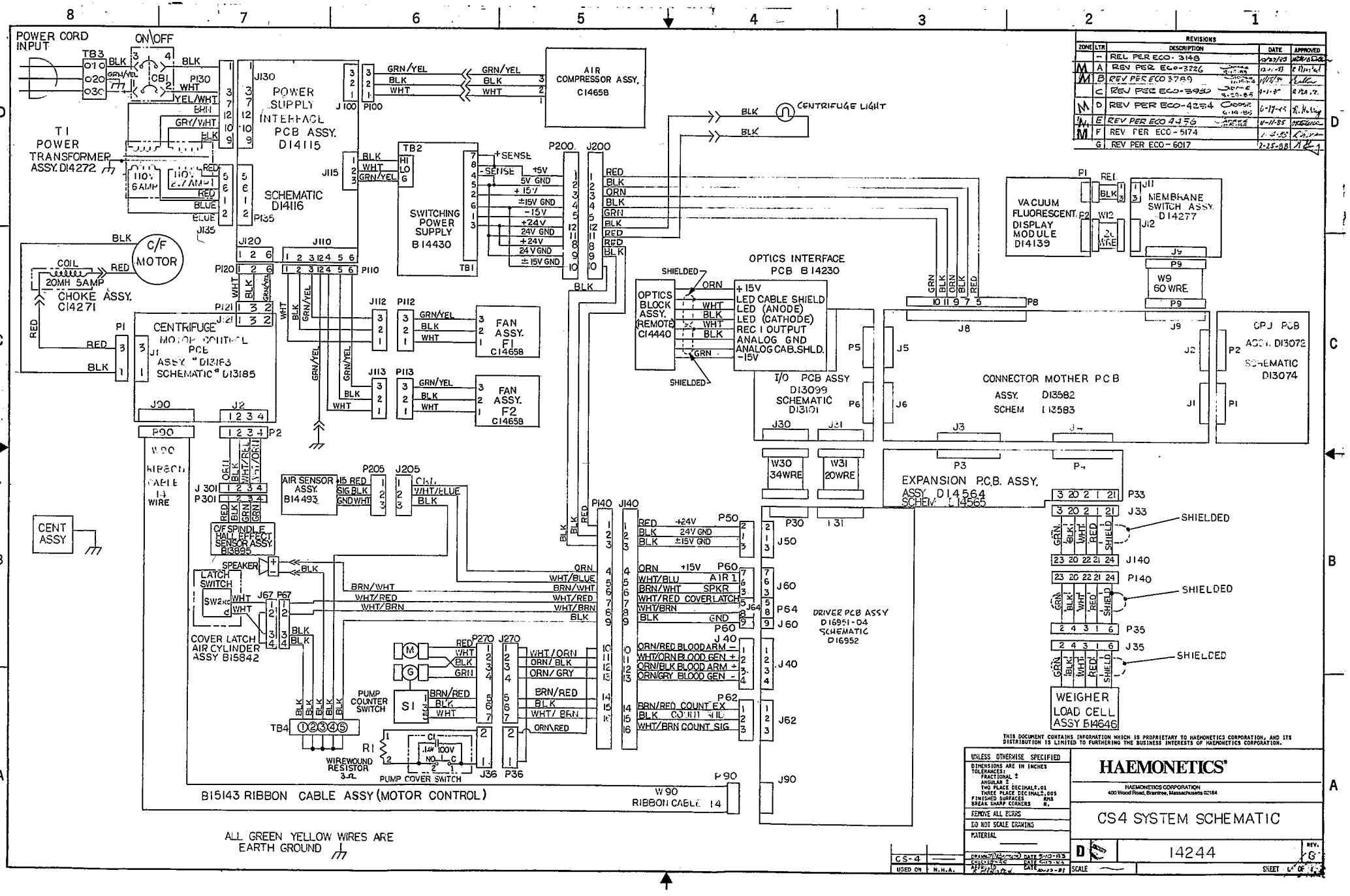
POWER CORD INPUT
ON/OFF
TB3
CB1
T1 POWER TRANSFORMER ASSY. D14272
110V 6AMP
110V 2.7AMP
POWER SUPPLY INTERFACE PCB ASSY. D14115
SCHEMATIC D14116
AIR COMPRESSOR ASSY. C14658
CENTRIFUGE LIGHT
SWITCHING POWER SUPPLY B14430
C/F MOTOR
COIL 20MH 5AMP
CHOKE ASSY. C14271
CENTRIFUGE MOTOR CONTROL PCB ASSY. "D13163 SCHEMATIC" D13185
FAN ASSY. F1 C14658
FAN ASSY. F2 C14658
OPTICS INTERFACE PCB B14230
OPTICS BLOCK ASSY. (REMOTE) C14440
+15V
LED CABLE SHIELD
LED (ANODE)
LED (CATHODE)
REC I OUTPUT
ANALOG GND
ANALOG CAB.SHLD.
-15V
I/O PCB ASSY D13099 SCHEMATIC D13101
VACUUM FLUORESCENT DISPLAY MODULE D14139
MEMBRANE SWITCH ASSY. D14277
W9 60 WRE
CPU PCB ASSY. D13072 SCHEMATIC D13074
CONNECTOR MOTHER PCB ASSY. D13582 SCHEM D13583
W30 34WRE
W31 20WRE
EXPANSION P.C.B. ASSY. ASSY D14564 SCHEM D14565
W90 RIBBON CABLE 14 WIRE
AIR SENSOR ASSY. B14493
C/F SPINDLE HALL EFFECT SENSOR ASSY. B13895
SPEAKER
LATCH SWITCH
COVER LATCH AIR CYLINDER ASSY B15842
PUMP COUNTER SWITCH
WIREWOUND RESISTOR 3Ω
PUMP COVER SWITCH
DRIVER PCB ASSY D16951-04 SCHEMATIC D16952
WEIGHER LOAD CELL ASSY B14646
SHIELDED
CENT ASSY
B15143 RIBBON CABLE ASSY (MOTOR CONTROL)
W90 RIBBON CABLE 14
ALL GREEN YELLOW WIRES ARE EARTH GROUND
REVISIONS
ZONE LTR DESCRIPTION DATE APPROVED
REL PER ECO-3148
REV PER ECO-3226
REV PER ECO 3789
REV PER ECO-3950
REV PER ECO-4234
REV PER ECO 4456
REV PER ECO-5174
REV PER ECO-6017
THIS DOCUMENT CONTAINS INFORMATION WHICH IS PROPRIETARY TO HAEMONETICS CORPORATION, AND ITS DISTRIBUTION IS LIMITED TO FURTHERING THE BUSINESS INTERESTS OF HAEMONETICS CORPORATION.
UNLESS OTHERWISE SPECIFIED
DIMENSIONS ARE IN INCHES
TOLERANCES:
FRACTIONAL ±
ANGULAR ±
TWO PLACE DECIMAL ±.01
THREE PLACE DECIMAL ±.005
FINISHED SURFACES RMS
BREAK SHARP CORNERS R.
REMOVE ALL BURRS
DO NOT SCALE DRAWING
MATERIAL
HAEMONETICS
HAEMONETICS CORPORATION
400 Wood Road, Braintree, Massachusetts 02184
CS4 SYSTEM SCHEMATIC
D 14244 REV. G
SCALE
SHEET 1 OF 1
CS-4
USED ON N.H.A.

REVISIONS				
ZONE	LTR	DESCRIPTION	DATE	APPROVED
M	D	REV. PER ECO-6017	2-25-88	
M	A	REV PER ECO 3494	6-24-8[illegible]	
M	B	REV PER ECO-3920	3-5-85	R. PLASTED
	C	REV PER ECO-5321	1/29/88	

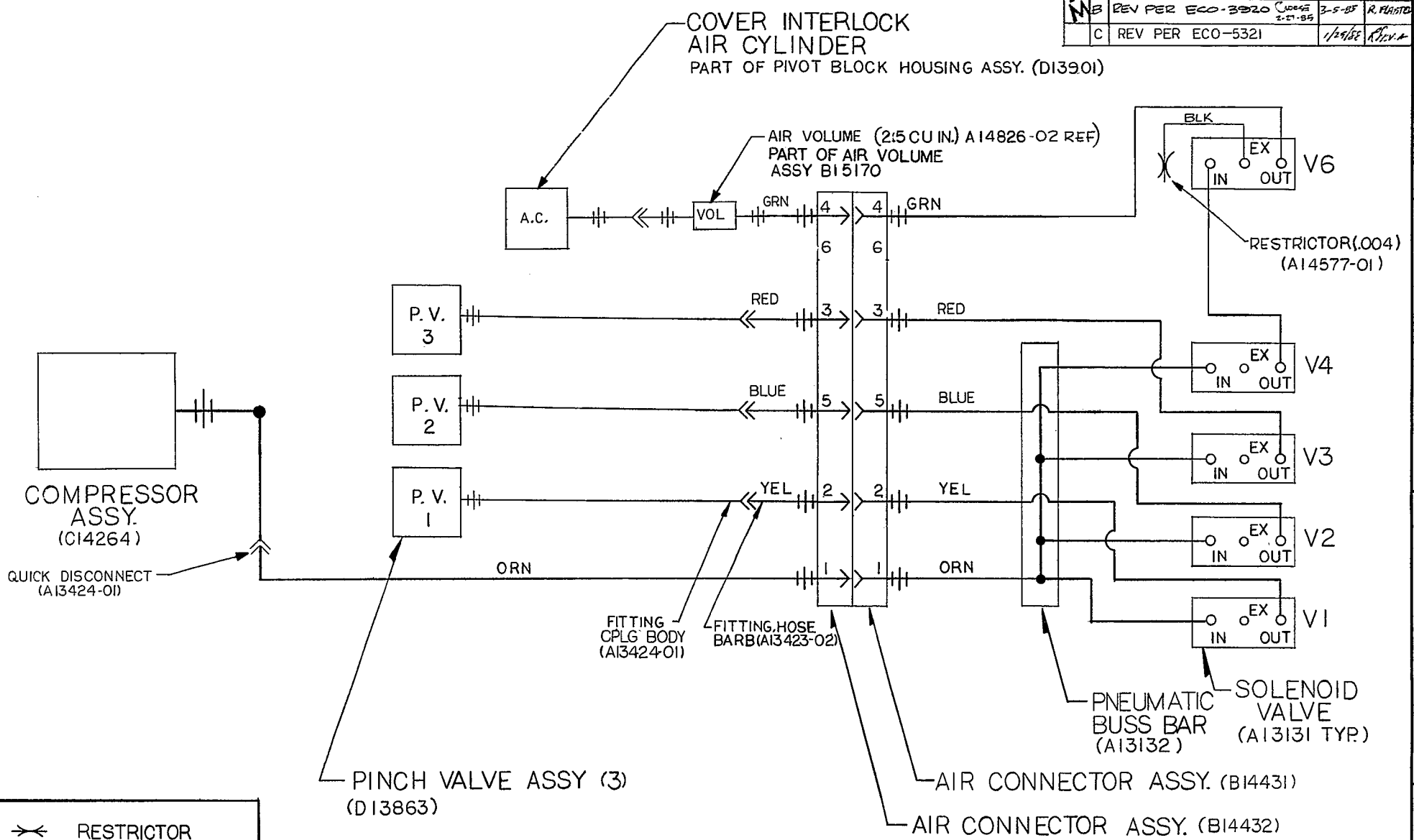

	RESTRICTOR
	TEE FITTING
	DISCONNECT
	BARBED FITTING

THIS DOCUMENT CONTAINS INFORMATION WHICH IS PROPRIETARY TO HAEMONETICS CORPORATION, AND ITS DISTRIBUTION IS LIMITED TO FURTHERING THE BUSINESS INTERESTS OF HAEMONETICS CORPORATION.

UNLESS OTHERWISE SPECIFIED
DIMENSIONS ARE IN INCHES
TOLERANCES:
FRACTIONAL ±
ANGULAR ±
TWO PLACE DECIMAL ±.01
THREE PLACE DECIMAL ±.005
FINISHED SURFACES RMS
BREAK SHARP CORNERS R.
REMOVE ALL BURRS
DO NOT SCALE DRAWING
MATERIAL ——

DRAWN DATE 9-16-93
CHECKED DATE 4-20-83
APPROVED DATE 6-29-84

HAEMONETICS®
HAEMONETICS CORPORATION
400 Wood Road, Braintree, Massachusetts 02184

PNEUMATIC SCHEMATIC
CS 4

C 14246 REV. D

SCALE —— SHEET 1 OF 1

CS 4 USED ON N.H.A.

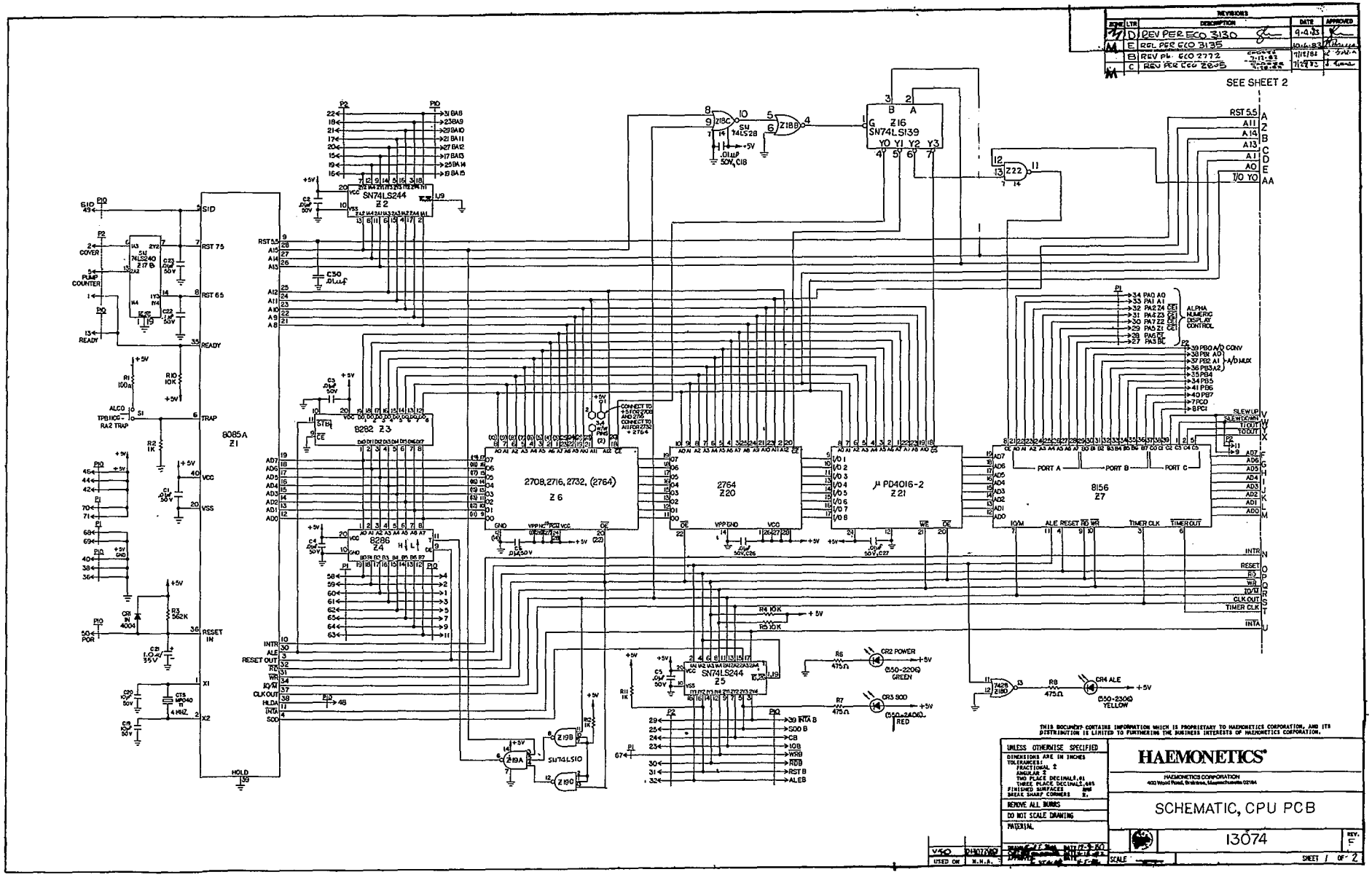
REVISIONS
D REV PER ECO 3130
E REL PER ECO 3135
B REV PER ECO 2772
C REV PER ECO 2835
SEE SHEET 2
8085A Z1
8282 Z3
8286 Z4
SN74LS244 Z2
2708,2716,2732,(2764) Z6
2764 Z20
μPD4016-2 Z21
8156 Z7
SN74LS139 Z16
SN74LS244 Z5
SN74LS10
ALPHA NUMERIC DISPLAY CONTROL
A/D MUX
A/D CONV
PORT A
PORT B
PORT C
CR2 POWER
CR3 SOD
CR4 ALE
THIS DOCUMENT CONTAINS INFORMATION WHICH IS PROPRIETARY TO HAEMONETICS CORPORATION, AND ITS DISTRIBUTION IS LIMITED TO FURTHERING THE BUSINESS INTERESTS OF HAEMONETICS CORPORATION.
UNLESS OTHERWISE SPECIFIED
REMOVE ALL BURRS
DO NOT SCALE DRAWING
MATERIAL
HAEMONETICS
HAEMONETICS CORPORATION
SCHEMATIC, CPU PCB
13074
SHEET 1 OF 2

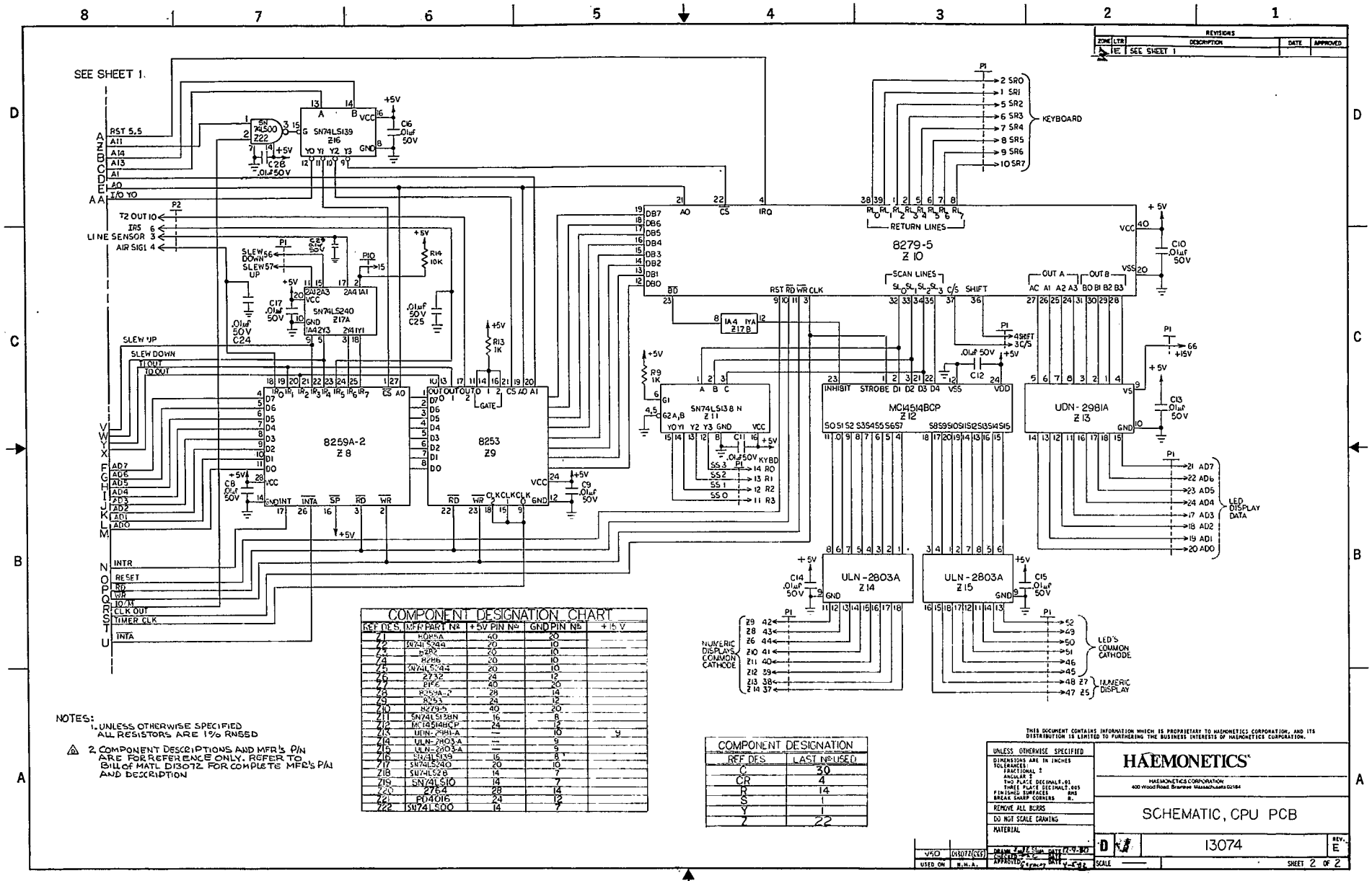

COMPONENT DESIGNATION CHART				
REF DES.	MFR PART Nº	+5V PIN Nº	GND PIN Nº	+15 V
Z1	8085A	40	20	
Z2	SN74LS244	20	10	
Z3	8282	20	10	
Z4	8286	20	10	
Z5	SN74LS244	20	10	
Z6	2732	24	12	
Z7	8156	40	20	
Z8	8259A-2	28	14	
Z9	8253	24	12	
Z10	8279-5	40	20	
Z11	SN74LS138N	16	8	
Z12	MC14514BCP	24	12	
Z13	UDN-2981-A	—	10	9
Z14	ULN-2803-A	—	9	
Z15	ULN-2803-A	—	9	
Z16	SN74LS139	16	8	
Z17	SN74LS240	20	10	
Z18	SN74LS28	14	7	
Z19	SN74LS10	14	7	
Z20	2764	28	14	
Z21	PD4016	24	12	
Z22	SN74LS00	14	7	

COMPONENT DESIGNATION	
REF DES	LAST Nº USED
C	30
CR	4
R	14
S	1
Y	1
Z	22

NOTES:
1. UNLESS OTHERWISE SPECIFIED ALL RESISTORS ARE 1% RN55D
2. COMPONENT DESCRIPTIONS AND MFR'S P/N ARE FOR REFERENCE ONLY. REFER TO BILL OF MATL D13072 FOR COMPLETE MFR'S P/N AND DESCRIPTION

THIS DOCUMENT CONTAINS INFORMATION WHICH IS PROPRIETARY TO HAEMONETICS CORPORATION, AND ITS DISTRIBUTION IS LIMITED TO FURTHERING THE BUSINESS INTERESTS OF HAEMONETICS CORPORATION.

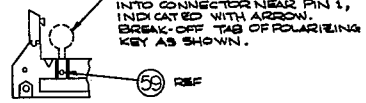

DETAIL "B"

SECTION A-A

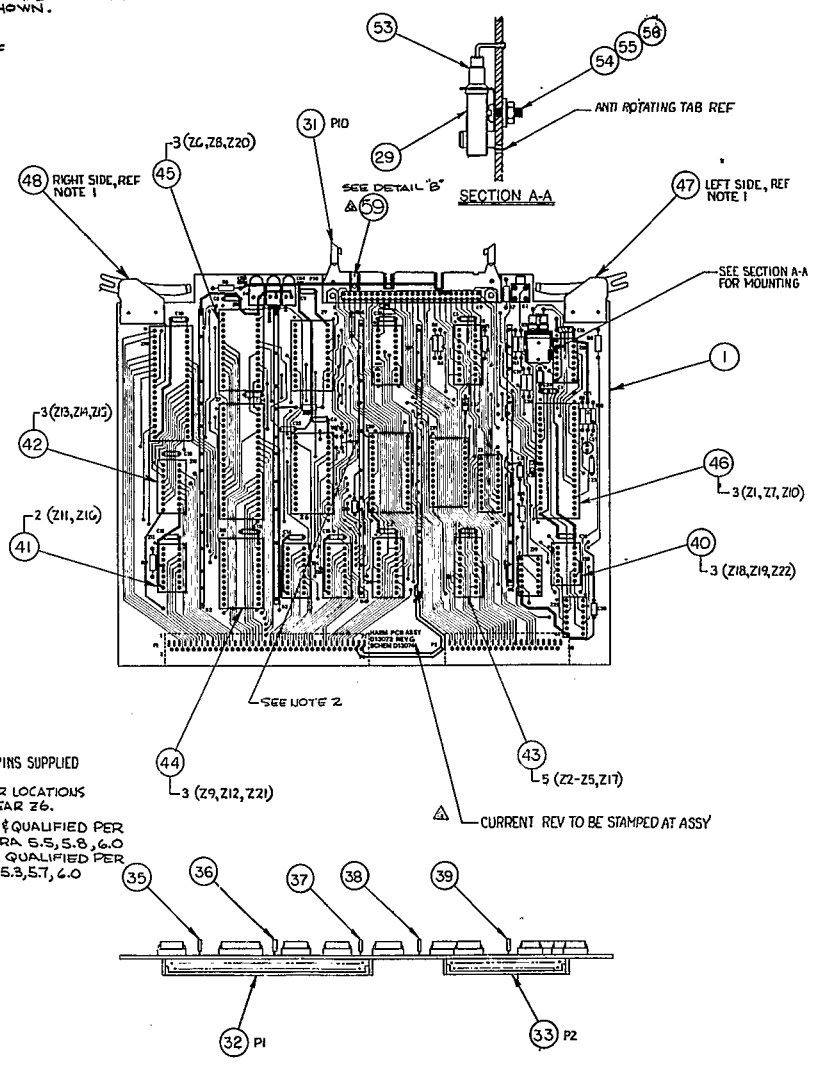

NOTE:

1. ASSEMBLE TO P.C. BOARD USING ROLLPINS SUPPLIED WITH EXTRACTORS.
2. USING No. 24 BUSS WIRE JUMPER LOCATIONS 2 AND 4 THAT ARE LOCATED NEAR Z6.
3. COMPONENTS TO BE TESTED & QUALIFIED PER HAEMONETICS QCP E122 PARA 5.5, 5.8, 6.0
4. COMPONENTS TO BE TESTED & QUALIFIED PER HAEMONETICS QCP E122 PARA 5.3, 5.7, 6.0

REVISIONS

ZONE	LTR	DESCRIPTION	DATE	APPROVED
	A	REL PER ECO-2565	4-5-82	G. Stacy
	B	REV PER ECO-2808	2/12/82	J. Cooke
	C	REV PER ECO-3084	6-15-83	R. Gruber
	D	REV PER ECO 3130	9-1-83	
	E	REV PER ECO 3135	10-6-83	R. Gruber
	F	REV PER ECO-3385	8/9/84	R. Gruber
	G	REV PER ECO-4389	11-18-85	R. Gruber

	REFERENCE DESIGNATION	ITEM NO	QTY.	PART NO	DESCRIPTION	NOTES
	Z6	REF	REF	BOM 13521-01	PROG. ASSY, V50 MAIN PROG, ENGLISH	
	Z20	REF	REF	BOM 13521-02	PROG ASSY, V50 MAIN PROG, ENGLISH	
	Z6	REF	REF	A13559	PROG ASSY, MCSIII, ENGLISH	
	C30	58	1	A27144-001	CAP, .01µf, 100V, 10% SP #CKR05BX1031455	
	C1-C6, C8-C18, C23-C28	30	23	A11351	CAP, .01µf 50V, AVX MD015C103K	
	C19, C20	28	2	A11355	CAP, 10pF, SPRAGUE, 292CC0G10D7050B	
	C21	27	1	A11352	CAP, 1.0µf 35V, SPRAGUE, 199D105X0035BB1	
	CR1	25	1	A40004-004	DIODE, IN4004	NOTE 3
	CR2	18	1	A11345	L.E.D., GREEN, DIALIGHT, 550-2206	
	CR3	19	1	A11347	LED, RED, DIALIGHT, 550-2406	
	CR4	20	1	A11346	LED, YELLOW, DIALIGHT, 550-2306	
	R14, R4, R5, R10	23	3	A33134-001	RESISTOR, 10K, 1%, RN55D	
	R2, R9, R11-R13	22	5	A33133-001	RESISTOR, 1K, 1%, RN55D	
	R3	24	1	A33133-562	RESISTOR, 5.62K, 1%, RN55D	
	R6, R7, R8	21	3	A33130-476	RESISTOR, 475Ω, 1%, RN55D	
	S1	26	1	A11296	SWITCH, MPB N.O. ALCO TPB11CQRA2	
	Y1	29	1	A11568	CRYSTAL, CTS 4.007MHZ HC-25/U	
	Z1	2	1	A30008-085	IC, INTEL QP8085AH-2 MICRO PROCESSOR	
	Z2, Z5	3	2	A30074-244	IC, TI SN74LS244N3-01 BUFFER/DRIVER	
	Z3	4	1	A30008-282	IC, INTEL QP8282 OCTAL LATCH	
	Z4	5	1	A30008-286	IC, INTEL QP8286 OCTAL BUS XCEIVER	
	Z7	7	1	A30008-156	IC, INTEL QP8156H 2048 BIT RAM	
	Z8	8	1	A30082-592	IC, INTEL QP8259A-2 INTERRUPT CNTLR	
	Z9	9	1	A30008-253	IC, INTEL QP8253-5 PRGMBL TIMER	
	Z10	10	1	A30008-279	IC, INTEL QP8279-5 PRGMBL DISPLAY	
	Z11	11	1	A30074-138	IC, TI SN74LS138N3-01 DECODER/MLTPLXR	
	Z12	12	1	A30014-514	IC, MOTOROLA MC14514BCPDS DECODER	
	Z13	13	1	A30002-981	IC, SPRAGUE UDN2981A BU DRIVER	
	Z14, Z15	14	2	A30002-803	IC, SPRAGUE ULN2803A BU BUFFER	
	Z16	15	1	A30074-139	IC, TI SN74LS139N3-01 DECODER/MLTPLXR	
	Z17	16	1	A30074-240	IC, TI SN74LS240N3-01 BUFFER	
	Z18	17	1	A30007-428	IC, TI SN74LS28N3-01 QUAD BUFFER	
	Z19	49	1	A30007-410	IC, TI SN74LS10N3-01 BUFFER/DRVR	
	Z21	51	1	A30004-016	IC, NEC µPD4016C-2 STATIC RAM	
	Z22	52	1	A30007-400	IC, TI SN74LS00N3-01 QUAD NAND GATE	NOTE 4
	C22, C29	34	2	A21149-001	CAP, .1µf, 50V, AVX MD015C104K	
	R1	57	1	A33131-010	RESISTOR, 100Ω, 1%, RN55D	

THIS DOCUMENT CONTAINS INFORMATION WHICH IS PROPRIETARY TO HAEMONETICS CORPORATION, AND ITS DISTRIBUTION IS LIMITED TO FURTHERING THE BUSINESS INTERESTS OF HAEMONETICS CORPORATION.

UNLESS OTHERWISE SPECIFIED
DIMENSIONS ARE IN INCHES
TOLERANCES:
FRACTIONAL ±
ANGULAR ±
TWO PLACE DECIMALS ±.01
THREE PLACE DECIMALS ±.005
FINISHED SURFACES RMS
BREAK SHARP CORNERS R.
REMOVE ALL BURRS
DO NOT SCALE DRAWING
MATERIAL
SEE BOM

HAEMONETICS®
HAEMONETICS CORPORATION
400 Wood Road, Braintree, Massachusetts 02184

CPU PCB ASSY

D 13072 REV. G

SCALE FULL SHEET 1 OF 1

V-50 | 013127 | N.H.A.
USED ON

BILL OF MATERIALS	HAEMONETICS CORP. 400 WOOD ROAD, BRAINTREE	PROD. IDENT. V50	BOM D 13072	REV. G	SHEET 1 OF 3
TITLE: CPU, PCB ASSEMBLY		DRWN BY: DATE: KS/VDG 11/81	CHECKED: CADOSE	DATE: 12-18-81	
			APPROVED: Stover	DATE: 4-5-82	

ITEM	QUANTITY G4	G3	G2	G1	PART NO./DWG NO.	DESCRIPTION	BOM	REFERENCE DESIGNATION
1				1	D 13073	CPU, Drilling		
Ref				Ref	D 13074	CPU, Schematic		
2				1	A 30008-085	IC, Intel QP8085AH-2, Microprocessor		Z1
3				2	A 30074-244	IC, TI SN74LS244N3-01, Buffer/Driver		Z2, Z5
4				1	A 30008-282	IC, Intel QP8282, Octal Latch		Z3
5				1	A 30008-286	IC, Intel QP8286, Octal Bus Transceiver		Z4
6								
7				1	A 30008-156	IC, Intel QP8156H2048, Bit Ram		Z7
8				1	A 30008-259	IC, Intel QP8259A-2		Z8
9				1	A 30008-253	IC, Intel QP8253-5, Programmable Timer		Z9
10				1	A 30008-279	IC, Intel QP8279-5, Programmable Display		Z10
11				1	A 30074-138	IC, TI SN74LS138N3-01, Decoder/Demultiplexer		Z11
12				1	A 30014-514	IC, Motorola MC14514BCPDS, Decoder		Z12
13				1	A 30002-981	IC, Sprague UDN2981ABU, Driver		Z13
14				2	A 30002-803	IC, Sprague ULN2803ABU		Z14, Z15
15				1	A 30074-139	IC, TI SN74LS139N3-01, Decoder/Demultiplexer		Z16
16				1	A 30074-240	IC, TI SN74LS240N3-01		Z17
17				1	A 30007-428	IC, TI SN74LS28N3-01, Quad Buffer		Z18
18				1	A 11345	LED, Green - Dialight 550-2206		CR2
19				1	A 11347	LED, Red - Dialight 550-2406		CR3

LTR	REVISION	APP'D	DATE	LTR	REVISION	APP'D	DATE
A	Release per ECO 2565			D	Rev. per ECO 3130		9/4/83
B	REV ECO 2805 CADOSE 7-28-82	Evans	7/29/82	E	Rev per ECO 3135 CADOSE 10-4-83		10-6-83
C	REV PER ECO-3094 CADOSE 6-13-83		6-15-83	F	REV ECO-3385 CADOSE 4-5-84		4/9/84
				G	REV ECO-4389 CADOSE 10-18-85		10-18-85

V50	D13127		
USED ON	N.H.A.	USED ON	N.H.A.

TITLE: CPU, PCB ASSEMBLY

BOM D 13072 REV. G

BOM D 13072	TITLE CPU, PCB ASSEMBLY	HAEMONETICS CORP. 400 WOOD ROAD, BRAINTREE	REV. G	SHEET 2 OF 3

8-8

ITEM	QUANTITY G4	G3	G2	G1	PART No./DWG No.	DESCRIPTION	BOM	REFERENCE DESIGNATION
20				1	A 11346	LED, Yellow, Dialight 550-2306		CR4
21				3	A 33130-475	Resistor, 475Ω RN55D (1%)		R6,R7,R8
22				5	A 33133-001	Resistor, 1K RN55D (1%)		R2,R9,R11,R12,R13
E 23				4	A 33134-001	Resistor, 10K RN55D (1%)		R14,R4,R5,R10
24				1	A 33133-562	Resistor, 562K RN55D (1%)		R3
25				1	A 40004-004	Diode, IN4004		CR1
26				1	A 11296	Switch, MPB N.O. Alco TPB11CGRA2		S1
27				1	A 11352	Cap, 1.0uf 35V,Sprague 199D105X0035BB1		C21
28				2	A 11355	Cap, 10pf, Sprague 292CC0G100J050B		C19, C20
B 29				1	A 11568	Crystal, 4.0MHz, HC-25/U		Y1
30				23	A 11351	Cap, .01uf, 50V, AVX MD015C103K		C1-C6,C8-C18,C23-C28
31				1	A 11302	Header, 50 Pin, 3M #3433-1302		P10
32				1	A 11292	Header, 71 Pin, AMP #202933-1		P1
33				1	A 11294	Header, 41 Pin, AMP #202933-2		P2
B 34				2	A 21145-001	Cap, .1μf, 50V, AVX MD015C104K		C22, C29
35				1	B 11288-02	Buss Bar, PCB		
36				1	B 11288-03	Buss Bar, PCB		
37				1	B 11288-04	Buss Bar, PCB		
38				1	B 11288-05	Buss Bar, PCB		
39				1	B 11288-06	Buss Bar, PCB		
40				3	A 11560-02	Socket, 14 Pin, Dip Augat 514-AG11D		Z18,Z19,Z22 Ref
41				2	A 11560-03	Socket, 16 Pin, Dip Augat 516-AG11D		Z11,Z16 Ref
42				3	A 11560-04	Socket, 18 Pin, Dip Augat 518-AG11D		Z13,Z14,Z15 Ref
43				5	A 11560-05	Socket, 20 Pin, Dip Augat 520-AG11D		Z2,3,4,5,17Ref
44				3	A 11560-06	Socket, 24 Pin, Dip Augat 524-AG11D		Z9,Z12,Z21 Ref
45				3	A 11560-07	Socket, 28 Pin, Dip Augat 528-AG11D		Z6,Z8,Z20 Ref
46				3	A 11560-08	Socket, 40 Pin, Dip Augat 540-AG11D		Z1,Z7,Z10 Ref
47				1	A 11802	Left PC Card Extractor		

BOM D 13072	TITLE CPU, PCB ASSEMBLY	HAEMONETICS CORP. 400 WOOD ROAD, BRAINTREE	REV. G	SHEET 3 OF 3

		QUANTITY							
	ITEM	G4	G3	G2	G1	PART NO./DWG NO.	DESCRIPTION	BOM	REFERENCE DESIGNATION
	48				1	A 11803	Right, PC Card Extractor		
	49				1	A 30007-410	IC, TI #SN74LS10N3-01, Buffer/Driver		Z19
	50								
	51				1	A 30004-016	IC, NEC uPD4016C-2, Static Ram		Z21
	52				1	A 30007-400	IC, TI SN74LS00N3-01, Quad Nand Gate		Z22
	53				1	A 13153	Socket, Augat # 8004-1G16		
	54				1	A 60110-104	Scr, Mach, Sl Pan Hd, SS, #2-56x1/4 Lg		
	55				1	A 56121-003	Washer, Plain, Rglr, #2, SS		
	56				1	A 31110-001	Nut, Hex, Rglr, SS, #2-56		
	57				1	A 33131-010	RESISTOR, 100Ω, 1%, RN55D		R1
F									
E									
E									
E	58				1	A 27144-001	Cap, SP #CKR05BX1031455, .01uf,100V,10%		C30
G	59				1	A 14625	KEY, POLARIZING, 3M # 3518		P10

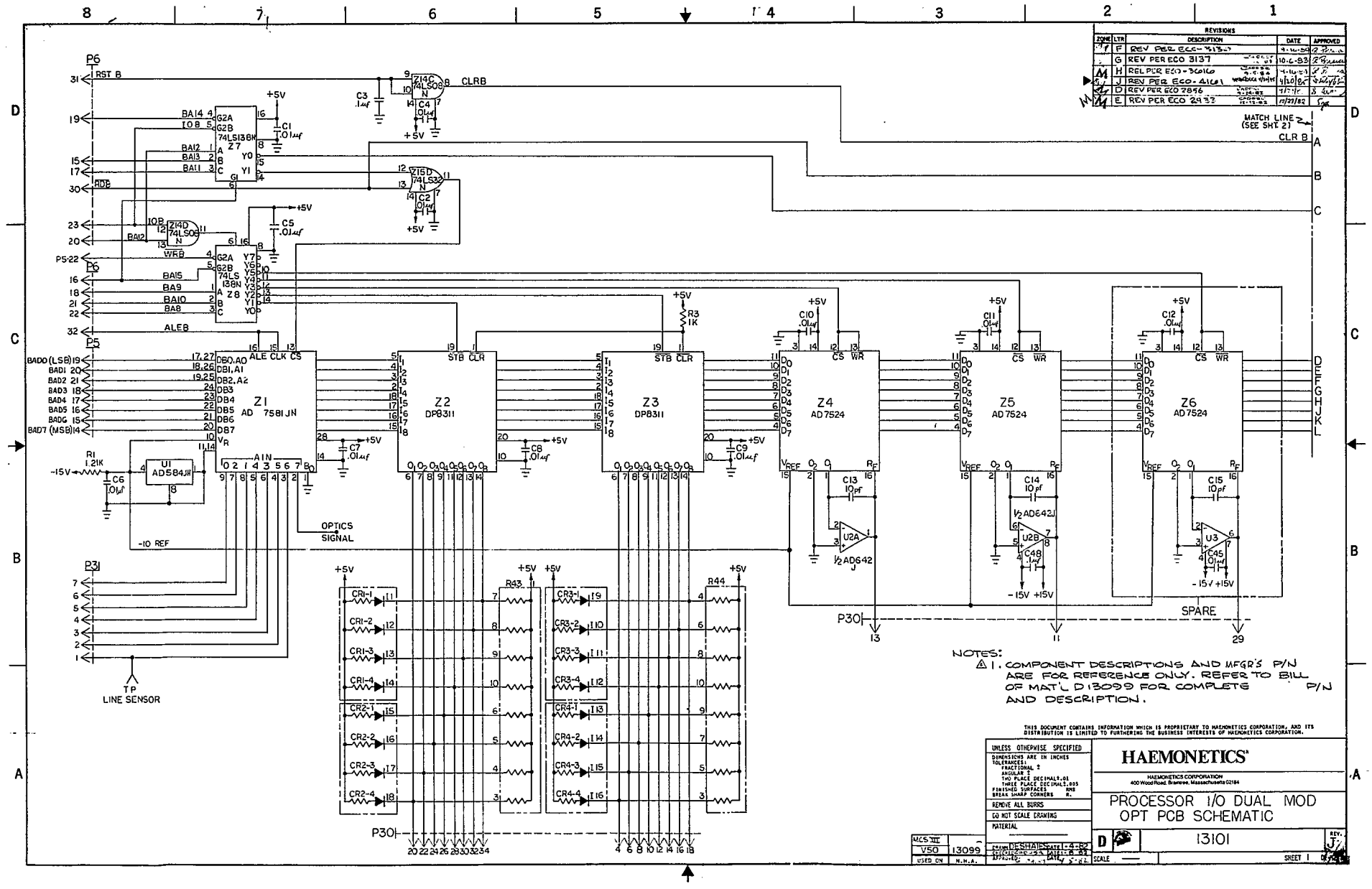
REVISIONS
ZONE LTR DESCRIPTION DATE APPROVED
F REV PER ECO-3130
G REV PER ECO 3137 10-6-83
H REL PER ECO-3016
J REV PER ECO-4161
D REV PER ECO 2856
E REV PER ECO 2933
MATCH LINE (SEE SHT 2)
CLR B
P6
RST B
CLRB
Z14C 74LS08 N
Z15D 74LS32 N
Z14D 74LS08 N
Z7 74LS138N
Z8 74LS138N
Z1 AD 7581JN
Z2 DP8311
Z3 DP8311
Z4 AD7524
Z5 AD7524
Z6 AD7524
U1 AD584JH
U2A ½AD642J
U2B ½AD642J
U3
R1 1.21K
R3 1K
R43
R44
OPTICS SIGNAL
-10 REF
TP LINE SENSOR
SPARE
P30
NOTES:
1. COMPONENT DESCRIPTIONS AND MFGR'S P/N ARE FOR REFERENCE ONLY. REFER TO BILL OF MAT'L D13099 FOR COMPLETE P/N AND DESCRIPTION.
THIS DOCUMENT CONTAINS INFORMATION WHICH IS PROPRIETARY TO HAEMONETICS CORPORATION, AND ITS DISTRIBUTION IS LIMITED TO FURTHERING THE BUSINESS INTERESTS OF HAEMONETICS CORPORATION.
UNLESS OTHERWISE SPECIFIED
DIMENSIONS ARE IN INCHES
TOLERANCES:
FRACTIONAL ±
ANGULAR ±
TWO PLACE DECIMAL ±.01
THREE PLACE DECIMAL ±.005
FINISHED SURFACES RMS
BREAK SHARP CORNERS R.
REMOVE ALL BURRS
DO NOT SCALE DRAWING
MATERIAL
HAEMONETICS
HAEMONETICS CORPORATION
400 Wood Road, Braintree, Massachusetts 02184
PROCESSOR I/O DUAL MOD
OPT PCB SCHEMATIC
D 13101 REV. J
MCS III V50 13099
USED ON N.H.A.
SCALE
SHEET 1

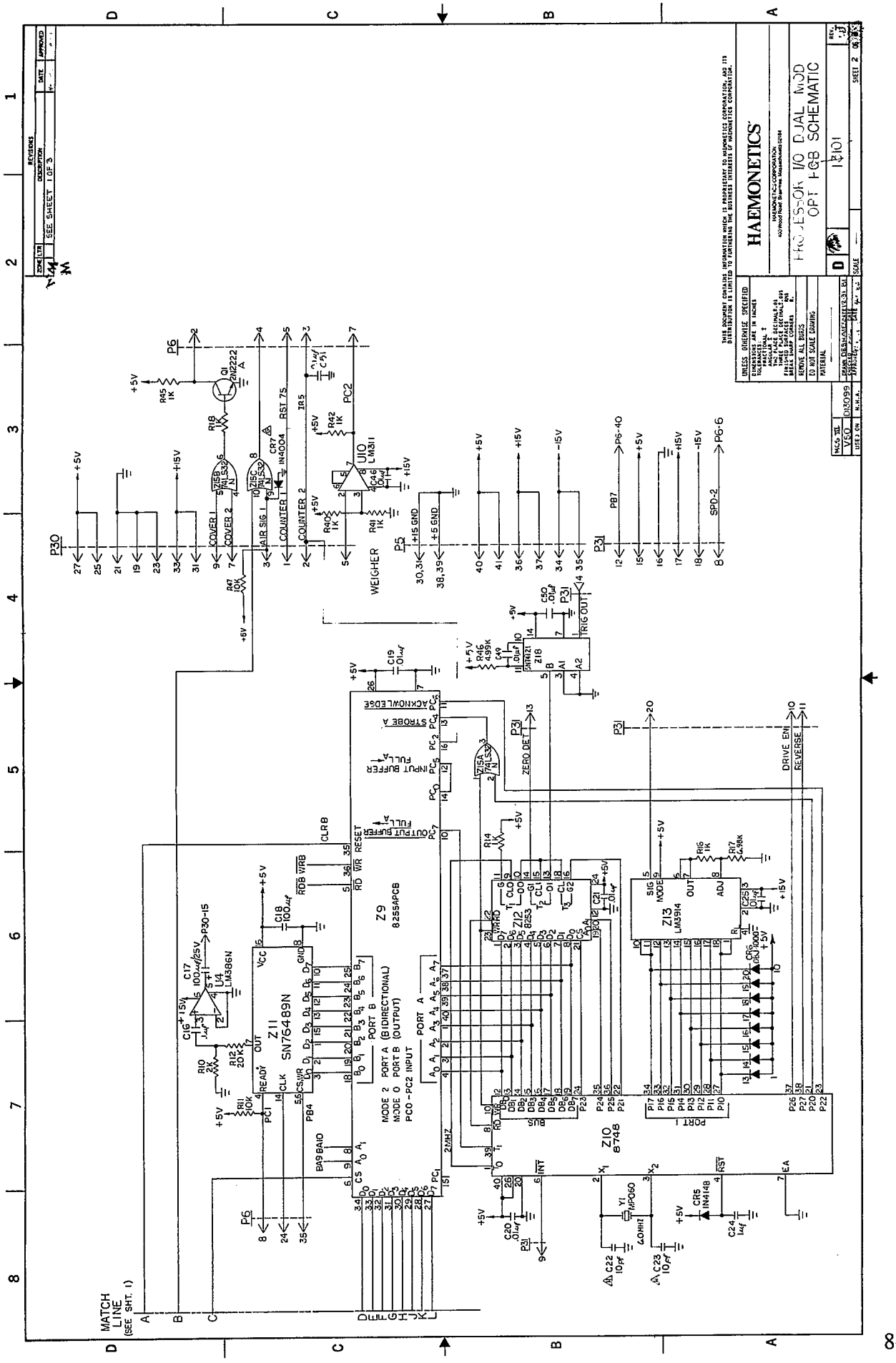
HAEMONETICS
PROCESSOR I/O DUAL MOD
OPT PCB SCHEMATIC
MATCH LINE (SEE SHT. 1)
WEIGHER
Z9 8255APCB
Z11 SN76489N
Z10 8748
Z12 8253
Z13 LM3914
U10 LM311
U4 LM386N
Q1 2N2222
MODE 2 PORT A (BIDIRECTIONAL)
MODE 0 PORT B (OUTPUT)
PC0-PC2 INPUT
PORT A
PORT B
PORT 1
ACKNOWLEDGE
STROBE A
INPUT BUFFER FULL A
OUTPUT BUFFER FULL A
ZERO DET
DRIVE EN
REVERSE
TRIG OUT
COVER 1
COVER 2
AIR SIG 1
COUNTER 1
COUNTER 2
+15 GND
+5 GND
SPD-2
REVISIONS
SEE SHEET 1 OF 3

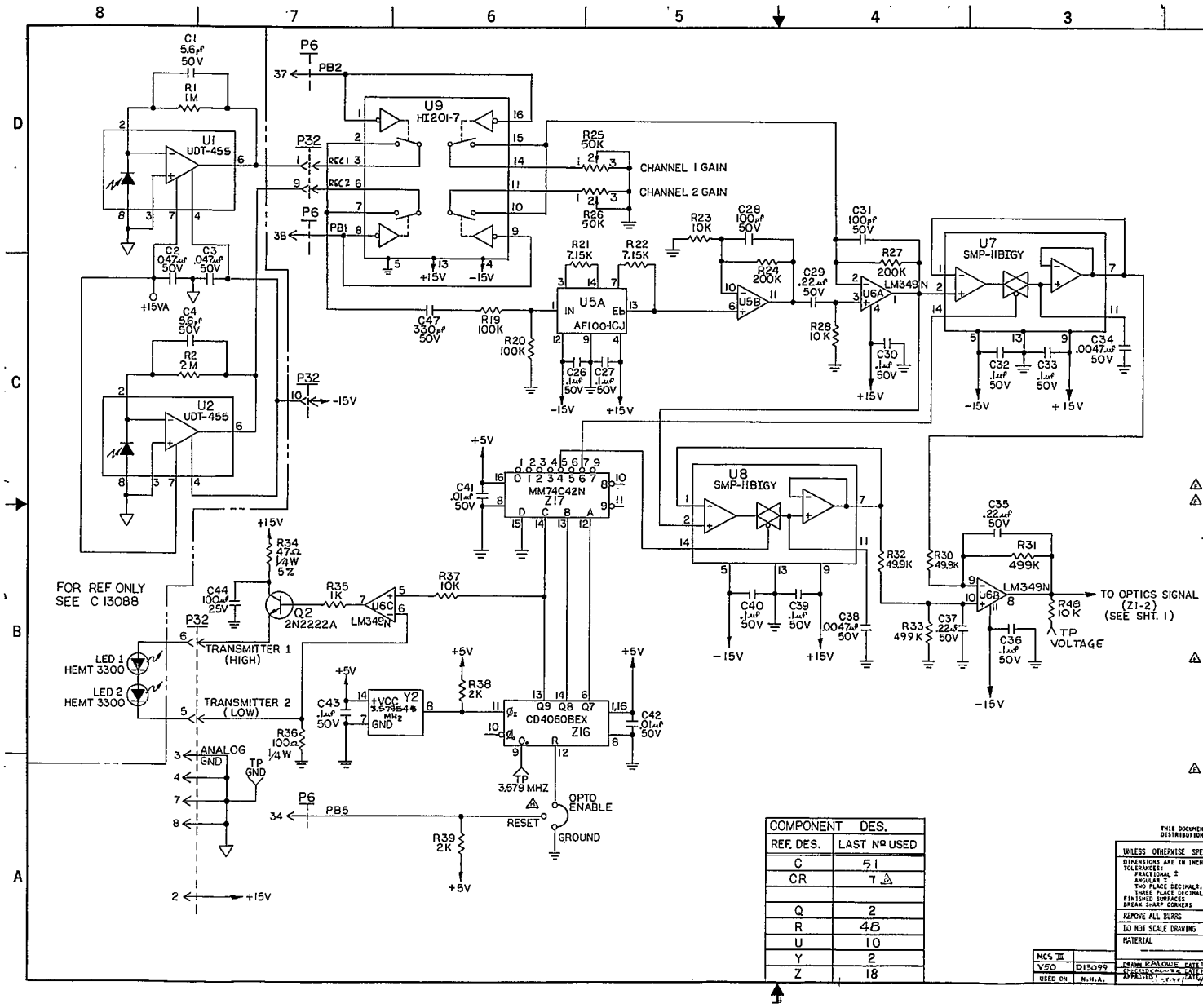

COMPONENT DESIGNATION CHART					
REF. DES.	MFG. PART Nº	+5V PIN Nº	GND PIN Nº	+15V PIN Nº	-15V PIN Nº
U1	AD584JH		1,8		4
U2	AD642JH			8	4
U4	LM386N	6	2,4		
U5	AF100-1CJ		9	4	12
U6	LM349N			4	11
△ U7,U8	SMP-11BIGY		13	9	5
△ U9	HI-201-7		5	12,13	4
U10	LM311N		1,4	8	
Z1	AD7581JN	26	14		
Z2,Z3	DP8311N	20	10		
Z4,Z5	AD7524LN	14	3		
Z7,Z8	74LS138N	16	8		
△ Z9	8255APCB	26	7		
Z10	8748	40	20		
Z11	76489N	16	8		
Z12	8253	24	12		
Z13	LM3914N	3	2		
Z14	74LS08N	14	7		
Z15	74LS32N	14	7		
△ Z16	CD4060BEX	1	8		
Z17	MM74C42N	16	8		
Z18	74121N	14	7		

COMPONENT DES.	
REF. DES.	LAST Nº USED
C	51
CR	7 △
Q	2
R	48
U	10
Y	2
Z	18

REVISIONS				
ZONE	LTR	DESCRIPTION	DATE	APPROVED
M		SEE SHT 1 OF 3		

THIS DOCUMENT CONTAINS INFORMATION WHICH IS PROPRIETARY TO HAEMONETICS CORPORATION, AND ITS DISTRIBUTION IS LIMITED TO FURTHERING THE BUSINESS INTERESTS OF HAEMONETICS CORPORATION.

UNLESS OTHERWISE SPECIFIED
DIMENSIONS ARE IN INCHES
TOLERANCES:
FRACTIONAL ±
ANGULAR ±
TWO PLACE DECIMAL ±.01
THREE PLACE DECIMAL ±.005
FINISHED SURFACES RMS
BREAK SHARP CORNERS R.
REMOVE ALL BURRS
DO NOT SCALE DRAWING
MATERIAL

HAEMONETICS®
HAEMONETICS CORPORATION
400 Wood Road, Braintree, Massachusetts 02184

PROCESSOR I/O DUAL MOD
OPT PCB SCHEMATIC

D 13101 REV. J
SCALE ~ SHEET 3 OF 3

NCS III V50 D13099 USED ON N.H.A.

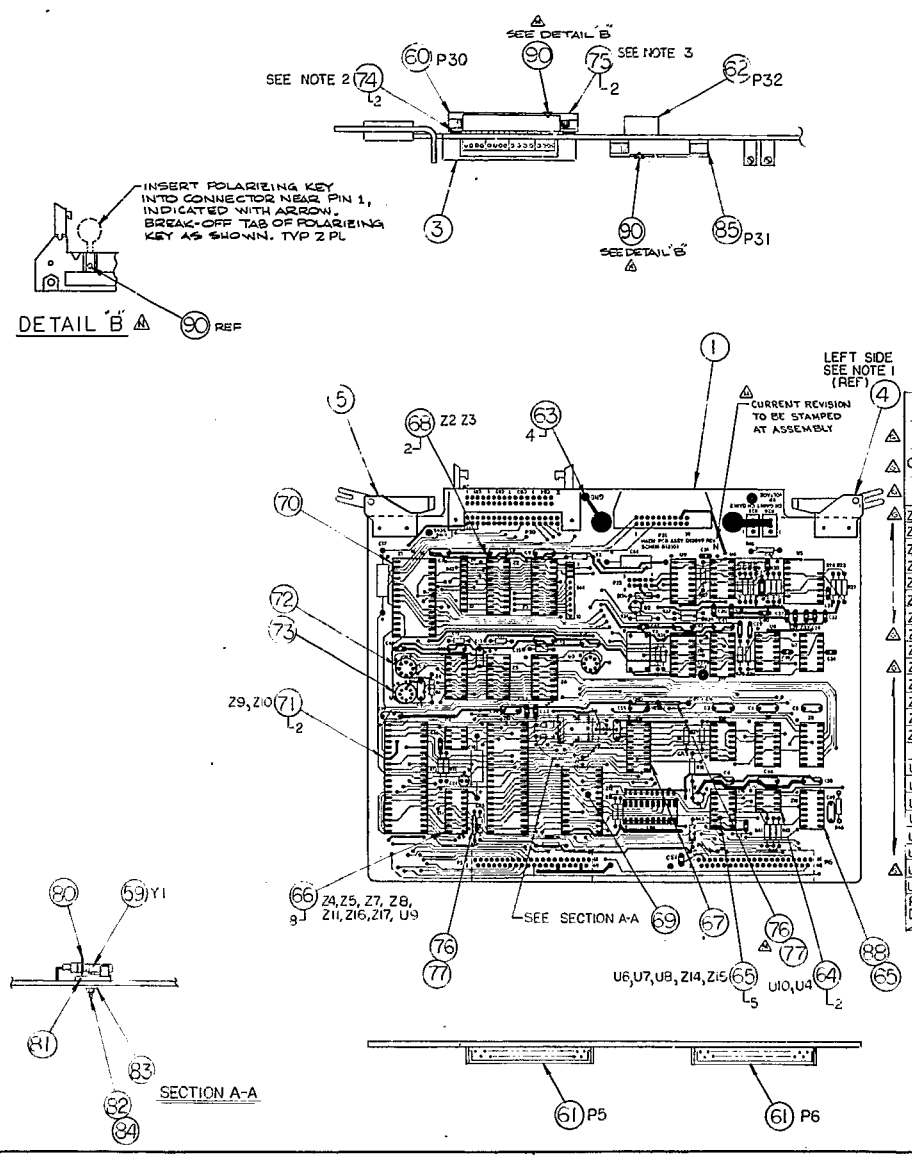

NOTES:

1. ASSEMBLE TO P.C. BOARD USING ROLL PINS SUPPLIED WITH EXTRACTORS.
2. POSITION TWO (2) NYLON WASHERS, ITEM (74), BETWEEN BOARD, ITEM (1), AND CONNECTOR P30 ITEM (60).
3. TWO (2) SCREWS, ITEM (75), SCREW INTO LED GUARD, ITEM (3).
4. COMPONENTS TO BE TESTED AND QUALIFIED PER HAEMONETICS QCP E122 PARAGRAPH 5.3, 5.7, 6.0.
5. COMPONENTS TO BE TESTED AND QUALIFIED PER HAEMONETICS QCP E122 PARAGRAPH 5.5, 5.8, 6.0.
6. COMPONENTS TO BE TESTED AND QUALIFIED PER HAEMONETICS QCP E122 PARAGRAPH 5.4, 5.8, 6.0.

REF DES / NOTES	ITEM Nº	QTY	DESCRIPTION	PART Nº
C47	78	1	CAP CERAMIC 330pf 50V 10% CENTRALAB CW15C331K	A21141-033
C34, C38	36	2	CAP CERAMIC .0047µf 50V 10% CENTRALAB CW15C472K	A21142-047
C29, 35, 37	34	3	CAP CERAMIC 22µf 50V 10% CENTRALAB CW30C224K	A21144-022
C28, C31	35	2	CAP CERAMIC 50V 10% 100pf CENTRALAB CN15C101K	A21142-001
Z18	88	1	IC SN74121N3-01	A30074-121
Z17 NOTE 4	25	1	IC MM74C42N/A+	A30007-442
Z16	24	1	IC CD4060BEX	A30004-060
Z15	7	1	IC SN74LS32N3-01	A30007-432
Z14	8	1	IC SN74LS021N3-01	A30007-408
Z13	16	1	IC LM3914N/A+	A30003-914
Z12	17	1	IC QP8253-5	A30008-253
Z11 NOTE 4	19	1	IC SN76489AN-01	A30007-489
Z10	9	REF	PROGRAM ASSY. V50 MTR CONT.	A13470
Z9 NOTE 4	20	1	IC AM8255APCB	A30008-255
Z7 Z8	6	2	IC SN74LS138N3-01	A30074-138
Z4 Z5	18	2	IC AD7524LN/883B	A30007-524
Z2 Z3	14	2	IC DP8311N/A+	A30008-311
Z1	10	1	IC AD7581JN/883B	A30007-581
U10	13	1	IC LM311N/A+	A30000-311
U9	26	1	IC HI201-7	A30002-015
U7 U8	23	2	IC SMP11B1GY	A30000-011
U6	22	1	IC LM349N/A+	A30000-349
U5	21	1	IC AF100-1CJ/A+	A30000-100
U4	15	1	IC LM386N-1/A+	A30000-386
U2	12	1	IC AD642JH/883B	A30000-642
U1	11	1	IC AD584JH/883B	A30000-584

REF DES / NOTES	ITEM Nº	QTY	DESCRIPTION	PART Nº
Y2	27	1	OSCILLATOR 3.579545MHz MOT K1100AN	A11808
Y1	59	1	CRYSTAL, 6.00 MHz, HC-25/U	A11317
R43, R44	79	2	RES NET. BOURNS, 4310R-101-103 10K	A11442
R36	57	1	RESISTOR, 100Ω, 1/4W 1%	A33231-010
R34	56	1	RESISTOR, 47Ω, 1/4W 5%	A33250-047
R31, R33	54	2	RESISTOR, 499K 1/8W 1%	A33133-499
R30, R32	53	2	RESISTOR, 49.9K 1/8W 1%	A33132-499
R46	87	1	RESISTOR, 4.99 1/8W 1%	A33131-499
R25, R26	58	2	RESISTOR, 50K TRIMPOT 66XR	A13544
R24, R27	51	2	RESISTOR, 200K 1/8W 1%	A33135-002
R21, R22	50	2	RESISTOR, 7.15K 1/8W 1%	A33131-715
R19, R20	49	2	RESISTOR, 100K 1/8W 1%	A33135-001
R12	47	1	RESISTOR, 20K 1/8W 1%	A33134-022
R10, 38, 39	46	3	RESISTOR, 2K 1/8W 1%	A33133-002
R11, 23, 28, R37, 47, 48	45	6	RESISTOR, 10K 1/8W 1%	A33134-001
R3, 14, 16, 18, 35 40, 41, 42, 45	43	9	RESISTOR, 1K 1/8W 1%	A33133-001
R1	42	1	RESISTOR, 1.21K 1/8W 1%	A33131-121
R17	86	1	RESISTOR, 6.98K 1/8W 1%	A33131-698
Q1, Q2 NOTE 6	41	2	TRANSISTOR, TI 2N2222A	A44002-222
CR7	89	1	DIODE, FAIRCHILD 1N4004	A40004-004
CR6	39		DISPLAY, OBG-1000	A13196-02
CR5 NOTE 5	38	1	DIODE, FAIRCHILD 1N4148	A40004-148
CR1-CR4	37	4	DIODE, DIALIGHT 555-4007	A11348
C24	33	1	CAP 1µf 199D105X0025AB1	A26186-001
C22, C23	32	2	CAP 10µf CN15C100K	A21140-010
C17, 18, 44	31	3	CAP 100µf 25V	A26178-001
C13, C14	30	2	CAP 10µf 292D000G100J050B	A11355
C3, 16, 26, 27 30, 32, 33, 36, 39, 40, 43, 48, 51	28	13	CAP CERAMIC 50V 10% 1µf CENTRALAB CW20C104K	A21155-001
C1, 2, 49, 50, 4-11, 19-21, 25, 41, 42, C46	29	19	CAP .01µf 50V MD015C103K	A11351

THIS DOCUMENT CONTAINS INFORMATION WHICH IS PROPRIETARY TO HAEMONETICS CORPORATION, AND ITS DISTRIBUTION IS LIMITED TO FURTHERING THE BUSINESS INTERESTS OF HAEMONETICS CORPORATION.

UNLESS OTHERWISE SPECIFIED
DIMENSIONS ARE IN INCHES
TOLERANCES:
FRACTIONAL ±
ANGULAR ±
TWO PLACE DECIMALS ±.01
THREE PLACE DECIMALS ±.005
FINISHED SURFACES RMS
BREAK SHARP CORNERS R.
REMOVE ALL BURRS
DO NOT SCALE DRAWING
MATERIAL ——

MCO III	C11833
V50	C13102
USED ON	N.H.A.

DRAWN DATE 4-16-87
CHECKED DATE 4-10-87
APPROVED DATE 6/2/87

HAEMONETICS

HAEMONETICS CORPORATION
400 Wood Road, Braintree, Massachusetts 02184

PROCESSOR I/O DUAL MOD
OPT PCB ASSEMBLY

D | 13099 | REV. N

SCALE 1:1 | SHEET 1 OF 1

8-14 BILL OF MATERIALS	HAEMONETICS CORP. 400 WOOD ROAD, BRAINTREE	PROD. IDENT.	BOM D 13099	REV. N	SHEET 1 OF 4
TITLE: PROCESSOR I/O DUAL MOD OPT PCB ASS'Y		DRWN BY: MDD/VDG DATE: 12/81	CHECKED: CADOSE	DATE: 2-17-82	
			APPROVED:	DATE: 4/30/85	

ITEM	QUANTITY G4	G3	G2	G1	PART NO./DWG NO.	DESCRIPTION	BOM	REFERENCE DESIGNATION
1				1	D 13100	Processor I/O Dual Mod Opt, PCB Drilling		
2				REF	D 13101	Processor I/O Dual Mod Opt, PCB Schematic		
3				1	B 11820	Guard, LED		
4				1	A 11802	Left PC Card Extractor		
5				1	A 11803	Right PC Card Extractor		
G 6				2	A 30074-138	IC, TI SN74LS138N3-01, Decoder/Demultiplexer		Z7,Z8
G 7				1	A 30007-432	IC, TI SN74LS32N3-01, Quad or Gate		Z15
G 8				1	A 30007-408	IC, TI SN74LS08N3-01, Quad and Gate		Z14
K 9								
G 10				1	A 30007-581	IC, Analog Devices AD7581JN/883B		Z1
11				1	A 30000-584	IC, Analog Devices AD584JH/883B Volt Ref		U1
12				1	A 30000-642	IC, OP Amp Analog Devices AD642JH/883B		U2
13				1	A 30000-311	IC, OP Amp National LM311N/A+		U10
14				2	A 30008-311	IC, National DP8311N/A+		Z2,Z3
15				1	A 30000-386	IC, OP Amp National LM386N-1/A+		U4
16				1	A 30003-914	IC, National LM3914N/A+		Z13
17				1	A 30008-253	IC, Intel QP8253-5 Prog Int Timer		Z12
G 18				2	A 30007-524	IC, Analog Devices AD7524LN/883B		Z4,Z5
K 19				1	A 30076-489	IC, TI SN76489AN-01 Sound Controller		Z11
G 20				1	A 30008-255	IC, AM8255APCB		Z9

LTR	REVISION	APP'D	DATE	LTR	REVISION	APP'D	DATE
J	REV PER ECO 3746 CADOSE 1-12-84		1-17-84	E	REV PER ECO 2856 CADOSE 9-23-82		9/29/82
M	REV ECO-3385 CADOSE 4-5-82		4/9/84	M	REV PER ECO 2933 CADOSE 12-22-82		12/23/82
M	REV PER ECO 3616 CADOSE 9-5-84		9-10-84				
M	REV PER ECO-4161 4/30/85		4/30/85	G	Rev. ECO 3130		9-7-83
M	REV PER ECO 4389 CADOSE 10-18-85		10-18-85	M	Rev per ECO 3137 CADOSE 9-30-83		10-6-83

MCS III	C11833		
V50	C13102		
USED ON	N.H.A.	USED ON	N.H.A.

TITLE: PROCESSOR I/O DUAL MOD OPT PCB ASSEMBLY

BOM D 13099 REV. N

BOM D 13099	TITLE PROCESSOR I/O DUAL MOD OPT PCB ASSEMBLY	HAEMONETICS CORP. 400 WOOD ROAD, BRAINTREE	REV. N	SHEET 2 OF 4

	ITEM	QUANTITY G4	G3	G2	G1	PART NO./DWG NO.	DESCRIPTION	BOM	REFERENCE DESIGNATION
B	21				1	A 30000-100	IC, Filter, National AF100-ICJ/A+		U5
	22				1	A 30000-349	IC, OP Amp, National LM349N/A+		U6
	23				2	A 30000-011	IC, PMI SMP11BIGY, Sample Hold		U7, U8
	24				1	A 30004-060	IC, RCA CD4060BEX, Counter		Z16
	25				1	A 30007-442	IC, National MM74C42N/A+ Decoder		Z17
	26				1	A 30002-015	IC, Harris HI201-7 Analog Switch		U9
G	27				1	A 11808	Oscillator, 3.579545 MHZ MOT K1100AN		Y2
G H	28				13	A 21155-001	Cap, Ceramic, 50V, 10%, .1uf Centralab CW20C104K		C3,16,26,27,30,32, 33,36,39,40,43,48,51
	29				19	A 11351	Cap, AUX MD015C103K .01uf, 50V		C1,2,4-11,25,19-21, 41,42,45,46,49,50
	30				2	A 11355	Cap, Sprague 292CC0G100J050B 10pf		C13,C14
	31				3	A 26178-001	Cap, EL Tant, 100uf, 25V 501D107F025MN		C17,18, 44
L	32				2	A 21140-010	Cap, Centralab CN15C, 100K, 10pf		C22,C23
	33				1	A 26156-001	Cap, Sprague 199D105X0025AB1 1uf		C24
G	34				3	A 21144-022	Cap, Ceramic, 50V, 10%, .22uf Centralab CW30C224K		C29,C35,C37
G	[illegible]				2	A 21142-001	Cap, Ceramic, 50V, 10%, 100pf Centralab CN15C101K		C31,C28
G	36				2	A 21142-047	Cap, Ceramic, 50V, 10%, .0047uf Centralab CW15C472K		C34,C38
	37				4	A 11348	Diode, Dialight 555-4007		CR1-CR4
G	38				1	A 40004-148	Diode, Fairchild IN4148		CR5
	39				1	A 13196-02	Display, Linear Litronix OBG-1000		CR6
E	40								
	41				2	A 44002-222	Transistor, T1 2N2222A		Q1,Q2
	42				1	A 33131-121	Resistor, 1.21K 1/8W 1% RN55D		R1
D	43				9	A 33133-001	Resistor, 1K 1/8W 1% "		R3,14,18,35,40, 41,42,46,45
	44				[illegible]	[illegible]	[illegible] 1/8W 1% "		[illegible]
D	45				6	A 33134-001	Resistor, 10K 1/8W 1% "		R,11,23,28, 37,48,47
	46				3	A 33133-002	Resistor, 2K 1/8W 1% "		R10,R38,R39
	47				1	A 33134-022	Resistor, 20K 1/8W 1% "		R12
	48								

D 13099	TITLE	PROCESSOR I/O DUAL MOD OPT PCB ASSEMBLY	HAEMONETICS CORP. 400 WOOD ROAD, BRAINTREE	REV. N	SHEET 3 OF 4

	QUANTITY G4	G3	G2	G1	PART NO./DWG NO.	DESCRIPTION	BOM	REFERENCE DESIGNATION
				2	A 33135-001	Resistor, 100K 1/8W 1% RN55D		R19,R20
50				2	A 33131-715	Resistor, 7.15K 1/8W 1% "		R21,R22
51				2	A 33135-002	Resistor, 200K 1/8W 1% "		R24,R27
52					[illegible]	[illegible]		[illegible]
[illegible]				2	A 33132-499	Resistor, 49.9K 1/8W 1% "		R30,R32
54				2	A 33133-499	Resistor, 499K 1/8W 1% "		R31, R33
55					[illegible]	Resistor, 374[illegible] 1/8W 1% "		R3[illegible]
56				1	A 33250-047	Resistor, 47Ω 1/4W 5%		R34
57				1	A 33231-010	Resistor, 100Ω 1/4W 1%		R36
D 58				2	A 13544	Res Trimpot, Beckman 66XR 50K		R25,R26
D 59				1	A 11317	Crystal, 6.00 MHz, HC-25/U		Y1
60				1	A 11356	Connector, 3M 3431-1303 34 Pin		P30
61				2	A 11294	Connector, Amp 202933-2 41 Pin		P5,P6
62				1	A 11809	Connector, Berg 65626-110		P32
F 63				4	A 10639	Terminal, PCB, Keystone 1502-2		
64				2	A 11560-01	Socket, Augat 508-AG11D 8 Pin		U4,U10
65				6	A 11560-02	Socket, Augat 514-AG11D 14 Pin		U6,7,8,Z14,Z15,Z18,
66				8	A 11560-03	Socket, Augat 516-AG11D 16 Pin		Z4,5,7,8,11,16, 17, U9
67				1	A 11560-04	Socket, Augat 518-AG11D 18 Pin		Z13
68				2	A 11560-05	Socket, Augat 520-AG11D 20 Pin		Z2,Z3
69				1	A 11560-06	Socket, Augat 524-AG11D 24 Pin		Z12
70				1	A 11560-07	Socket, Augat 528-AG11D 28 Pin		Z1
71				2	A 11560-08	Socket, Augat 540-AG11D 40 Pin		Z9,Z10
72				1	A 11513-02	Socket, Augat 8058-1G50 (.230)		U2
73				1	A 11513-03	Socket, Augat 8058-1G49 (.200)		U1
74				2	A 56155-003	Washer, Plain .06 Thk, Nylon #2		
75				2	A 60110-108	Scr, Mach. Sltd Pnh, SS, #2-56 x .50		
M 76				.104	A 10418-03	Buss Wire, Solid Tinned #22 AWG		

BOM D 13099	REV. N

D 13099	TITLE PROCESSOR I/O DUAL MOD OPT PCB ASSEMBLY	HAEMONETICS CORP. 400 WOOD ROAD, BRAINTREE	REV. N	SHEET 4 OF 4

	ITEM	QUANTITY G4	G3	G2	G1	PART NO./DWG NO.	DESCRIPTION	BOM	REFERENCE DESIGNATION
M	77				.104	A 10499-02	Tubing, Teflon #22 AWG		
G	78				1	A 21141-033	Cap, Ceramic 50V,10%,330pf, Centralab CW15C331K		C47
J	79				2	A 11442	Res., Net., Bournes 4310R-101-103 (10K)		R43, R44
	80				1	A 13153	Socket, Augat #8004-1G16		Y1
	81				1	A 13215-01	Washer, Insulator, Thermalloy #56-02-10		
	82				1	A 60110-104	Scr, Mach, Sl Pnh, SS #2-56 x 1/4"Lg		
	83				1	A 56125-003	Washer, Plain, Rglr, Nylon, #2		
	84				1	A 31110-001	Nut, Hex, Rglr, SS, #2-56		
	85				1	A 13136	Conn, 3M, Header #3428-1303		P31
	86				1	A 33131-698	RESISTOR, 6.98K, 1/8 W, 1%, RN55D		R17
D	87				1	A 33131-499	RESISTOR, 4.99K 1/8W, 1%, RN55D		R46
G	88				1	A 30074-121	IC, TI, SN74121N3-01 MONOSTABLE MULTIVIBRATOR		Z18
H	89				1	A 40004-004	DIODE, FAIRCHILD 1N4004		CR7
N	90				2	A 14625	KEY, POLARIZING, 3M # 3518		P30, P31

BOM D 13099	REV. N

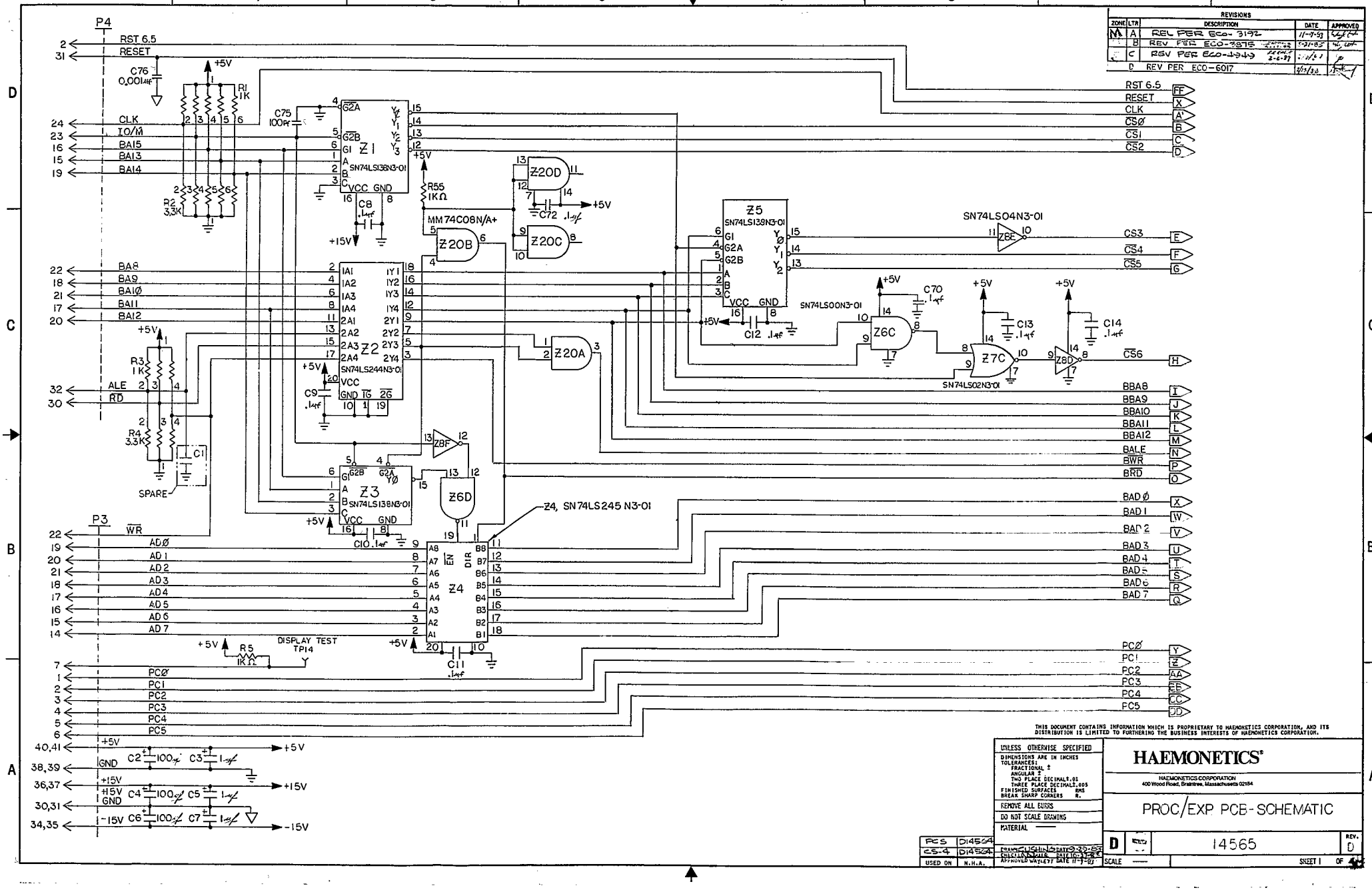
P4
RST 6.5
RESET
CLK
IO/M
BAI5
BAI3
BAI4
BA8
BA9
BAIØ
BAI1
BAI2
ALE
RD
P3
WR
AD Ø
AD 1
AD 2
AD 3
AD 4
AD 5
AD 6
AD 7
PCØ
PC1
PC2
PC3
PC4
PC5
+5V
GND
+15V
-15V
C76 0.001µf
R1 1K
R2 3.3K
R3 1K
R4 3.3K
C1
SPARE
C75 100pf
Z1 SN74LS138N3-01
C8 .1µf
R55 1KΩ
MM74C08N/A+
Z20B
Z20D
Z20C
C72 .1µf
Z2 SN74LS244N3-01
C9 .1µf
Z20A
Z5 SN74LS139N3-01
C12 .1µf
SN74LS04N3-01
Z8E
SN74LS00N3-01
Z6C
C70 .1µf
C13 .1µf
Z7C
SN74LS02N3-01
C14 .1µf
Z8D
Z8F
Z3 SN74LS138N3-01
C10 .1µf
Z6D
Z4, SN74LS245 N3-01
Z4
C11 .1µf
R5 1KΩ
DISPLAY TEST TP14
C2 100µf
C3 1µf
C4 100µf
C5 1µf
C6 100µf
C7 1µf
CS3
CS4
CS5
CS6
BBA8
BBA9
BBAIO
BBAI1
BBAI2
BALE
BWR
BRD
BAD Ø
BAD 1
BAD 2
BAD 3
BAD 4
BAD 5
BAD 6
BAD 7
REVISIONS
ZONE LTR DESCRIPTION DATE APPROVED
A REL PER ECO-3192 11-9-83
B REV PER ECO-3915
C REV PER ECO-4949
D REV PER ECO-6017
THIS DOCUMENT CONTAINS INFORMATION WHICH IS PROPRIETARY TO HAEMONETICS CORPORATION, AND ITS DISTRIBUTION IS LIMITED TO FURTHERING THE BUSINESS INTERESTS OF HAEMONETICS CORPORATION.
UNLESS OTHERWISE SPECIFIED
DIMENSIONS ARE IN INCHES
TOLERANCES:
FRACTIONAL ±
ANGULAR ±
TWO PLACE DECIMAL ±.01
THREE PLACE DECIMAL ±.005
FINISHED SURFACES RMS
BREAK SHARP CORNERS R.
REMOVE ALL BURRS
DO NOT SCALE DRAWING
MATERIAL
PCS D14564
CS-4 D14564
USED ON N.H.A.
DRAWN DATE
CHECKED DATE
APPROVED DATE
HAEMONETICS
HAEMONETICS CORPORATION
400 Wood Road, Braintree, Massachusetts 02184
PROC/EXP PCB-SCHEMATIC
D
14565
REV. D
SCALE
SHEET 1 OF

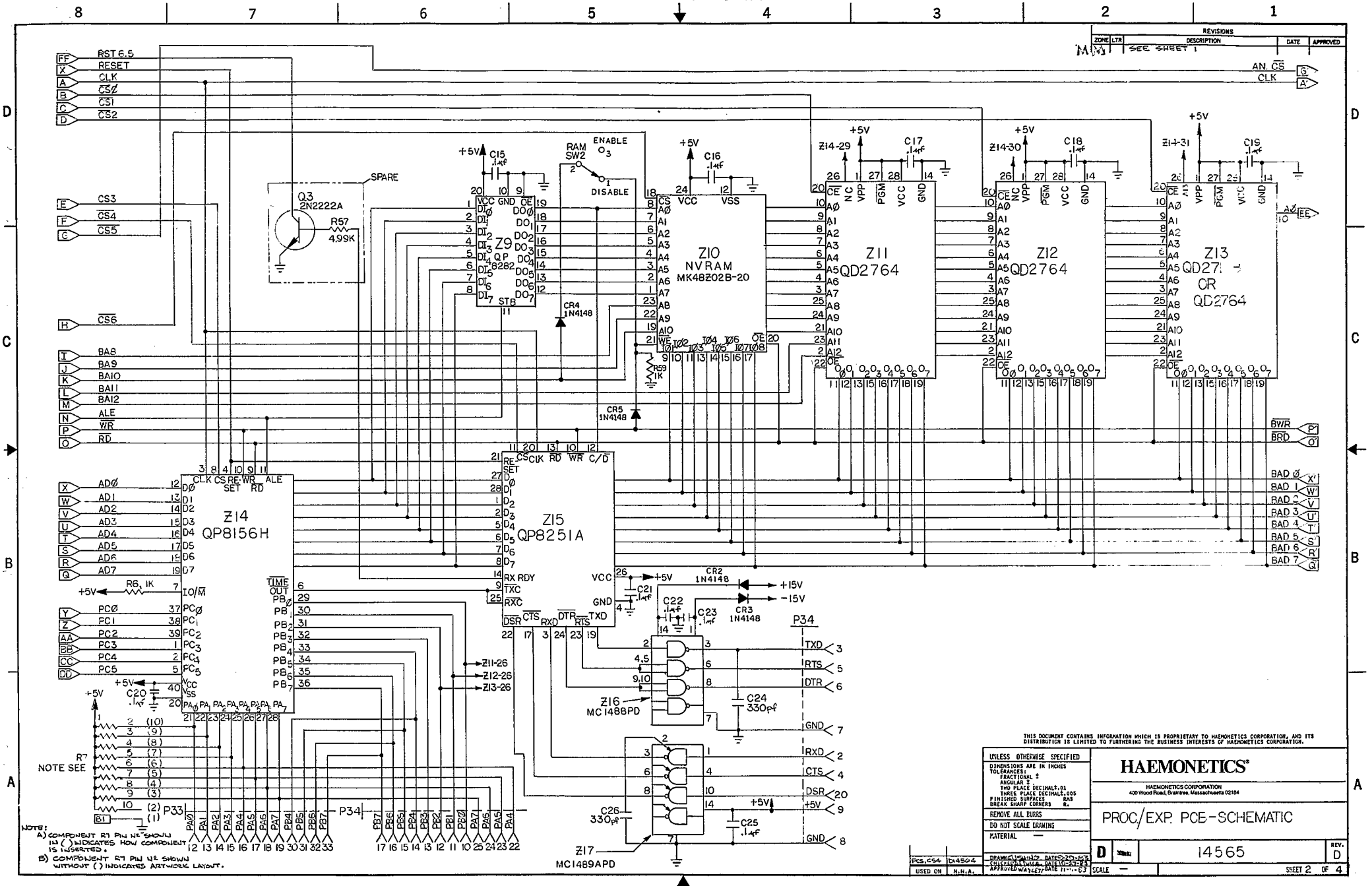
REVISIONS
ZONE LTR DESCRIPTION DATE APPROVED
SEE SHEET 1
RST 6.5
RESET
CLK
CS0
CS1
CS2
CS3
CS4
CS5
CS6
BA8
BA9
BA10
BA11
BA12
ALE
WR
RD
AD0
AD1
AD2
AD3
AD4
AD5
AD6
AD7
PC0
PC1
PC2
PC3
PC4
PC5
AN. CS
CLK
EE
BWR
BRD
BAD 0
BAD 1
BAD 2
BAD 3
BAD 4
BAD 5
BAD 6
BAD 7
SPARE
Q3
2N2222A
R57
4.99K
Z9
8282
Z10
NVRAM
MK48Z02B-20
Z11
QD2764
Z12
QD2764
Z13
QD27
OR
QD2764
Z14
QP8156H
Z15
QP8251A
Z16
MC1488PD
Z17
MC1489APD
RAM
SW2
ENABLE
DISABLE
CR4
1N4148
CR5
1N4148
CR2
1N4148
CR3
1N4148
R59
1K
R6, 1K
C15
C16
C17
C18
C19
C20
C21
C22
C23
C24
330pf
C25
C26
330pf
+5V
+15V
-15V
P34
P33
R7
NOTE SEE
B1
NOTE:
A) COMPONENT R7 PIN 1 IS SHOWN IN ( ) INDICATES HOW COMPONENT IS INSERTED.
B) COMPONENT R7 PIN 1 IS SHOWN WITHOUT ( ) INDICATES ARTWORK LAYOUT.
THIS DOCUMENT CONTAINS INFORMATION WHICH IS PROPRIETARY TO HAEMONETICS CORPORATION, AND ITS DISTRIBUTION IS LIMITED TO FURTHERING THE BUSINESS INTERESTS OF HAEMONETICS CORPORATION.
UNLESS OTHERWISE SPECIFIED
DIMENSIONS ARE IN INCHES
TOLERANCES:
FRACTIONAL ±
ANGULAR ±
TWO PLACE DECIMAL ±.01
THREE PLACE DECIMAL ±.005
FINISHED SURFACES RMS
BREAK SHARP CORNERS R.
REMOVE ALL BURRS
DO NOT SCALE DRAWING
MATERIAL —
HAEMONETICS®
HAEMONETICS CORPORATION
400 Wood Road, Braintree, Massachusetts 02184
PROC/EXP. PCB-SCHEMATIC
D
14565
REV. D
SCALE —
SHEET 2 OF 4
PCS, CS4
D14504
USED ON N.H.A.

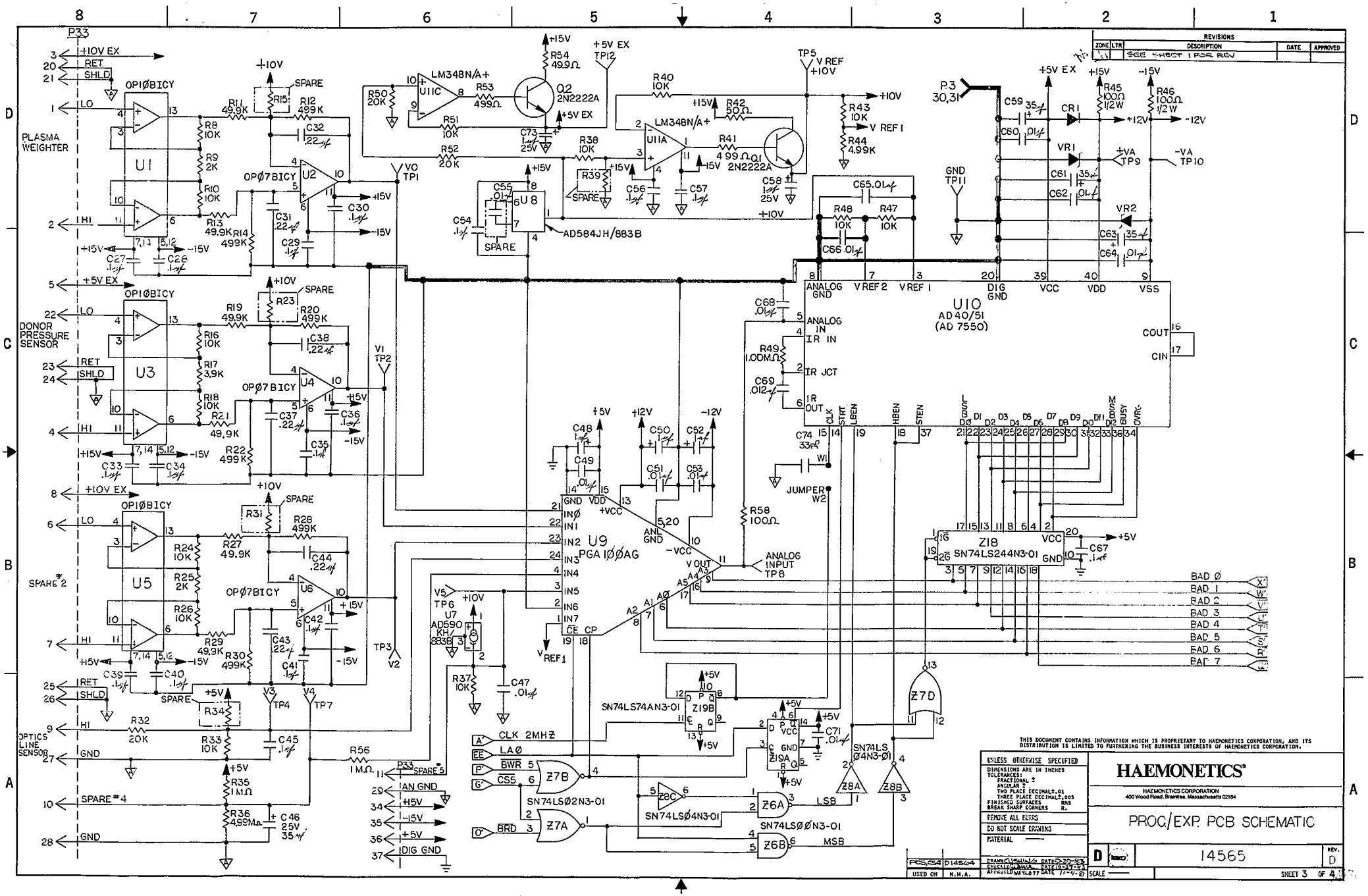
PLASMA WEIGHTER
DONOR PRESSURE SENSOR
SPARE #2
OPTICS LINE SENSOR
OP1ØBICY
OPØ7BICY
U1
U2
U3
U4
U5
U6
U8
U9
PGA 1ØØAG
U10
AD 40/51
(AD 7550)
U7
AD590 KH/883B
LM348N/A+
U11C
U11A
Q2 2N2222A
Q1 2N2222A
AD584JH/883B
Z18
SN74LS244N3-01
Z19B
Z19A
SN74LS74AN3-01
SN74LSØ2N3-01
SN74LSØ4N3-01
SN74LSØØN3-01
SN74LS Ø4N3-Ø1
Z7A
Z7B
Z7D
Z8A
Z8B
Z8C
Z6A
Z6B
P3 30,31
P33
+10V EX
RET
SHLD
LO
HI
+5V EX
GND
SPARE #4
AN GND
DIG GND
V REF
V REF 1
V REF 2
ANALOG GND
ANALOG IN
IR IN
IR JCT
IR OUT
DIG GND
VCC
VDD
VSS
COUT
CIN
CLK
STRT
LBEN
HBEN
STEN
BUSY
OVRG
JUMPER W2
ANALOG INPUT TP8
CLK 2MHZ
LAØ
BWR
CS5
BRD
LSB
MSB
BAD Ø
BAD 1
BAD 2
BAD 3
BAD 4
BAD 5
BAD 6
BAD 7
REVISIONS
ZONE
LTR
DESCRIPTION
DATE
APPROVED
SEE SHEET 1 FOR REV
THIS DOCUMENT CONTAINS INFORMATION WHICH IS PROPRIETARY TO HAEMONETICS CORPORATION, AND ITS DISTRIBUTION IS LIMITED TO FURTHERING THE BUSINESS INTERESTS OF HAEMONETICS CORPORATION.
UNLESS OTHERWISE SPECIFIED
DIMENSIONS ARE IN INCHES
TOLERANCES:
FRACTIONAL ±
ANGULAR ±
TWO PLACE DECIMAL ±.01
THREE PLACE DECIMAL ±.005
FINISHED SURFACES RMS
BREAK SHARP CORNERS R.
REMOVE ALL BURRS
DO NOT SCALE DRAWING
MATERIAL
HAEMONETICS®
HAEMONETICS CORPORATION
400 Wood Road, Braintree, Massachusetts 02184
PROC/EXP. PCB SCHEMATIC
D
14565
REV. D
SCALE
SHEET 3 OF 4
PCS,CS4 D14564
USED ON N.H.A.

REVISIONS				
ZONE	LTR	DESCRIPTION	DATE	APPROVED
[illegible]		SEE SHEET 1 FOR REV	11-9-83	[illegible]

REF. DES.	MFG. PART No.	PIN No. +5V	PIN No. GND	+15V PIN No.	-15V PIN No.
Z20	MM74C08N/A+	14	7	---	---
Z19	SN74LS74AN3-01	14	7	---	---
Z17	MC1483APD	14	7	---	---
Z16	MC 1488PD	---	7	14	1
Z15	QP8251A	28	14	---	---
Z14	QP 8156 H	40	20	---	---
Z11,Z12,Z13	QP 2764 REF	28	14	---	---
Z10	MK48Z02B-20	24	12	---	---
Z9	QP8282	20	10	---	---
Z8	SN 74LS04N3-01	14	7	---	---
Z7	SN 74LS02N3-01	14	7	---	---
Z6	SN 74LS00N3-01	14	7	---	---
Z4	SN 74[illegible]N3-01	20	10	---	---
Z2,Z18	SN74LS244N3-01	20	10	---	---
Z1,Z3,Z5	SN74LS138N3-01	16	8	---	---
U11	LM 348N/A+	---	---	4	11
U10	AD40/51	39	---	---	---
U9	PGA100AG	15	14	---	---
U8	AD584JH/883B	---	---	8	---
U7	AD590KH/883B	---	3	---	---
U2,U4,U6	OP07BICY	---	---	11	6
U1,U3,J5	OP10BICY	---	---	7,14	5,12

COMPONENT DESIGNATION CHART

REF DES.	LAST No. USED
Z	20
VR	2
U	11
TP	14
SW	2
R	59
Q	3
CR	5
C	76

COMPONENT DESIGNATION

NOTES:

1. ALL RESISTORS TO BE 1/6W, 1% UNLESS OTHERWISE SPECIFIED.
2. COMPONENT DESCRIPTIONS AND MFR'S P/N ARE FOR REFERENCE ONLY. REFER TO BILL OF MATERIAL D-14564 FOR COMPLETE MFR'S P/N AND DESCRIPTION.

THIS DOCUMENT CONTAINS INFORMATION WHICH IS PROPRIETARY TO HAEMONETICS CORPORATION, AND ITS DISTRIBUTION IS LIMITED TO FURTHERING THE BUSINESS INTERESTS OF HAEMONETICS CORPORATION.

UNLESS OTHERWISE SPECIFIED
DIMENSIONS ARE IN INCHES
TOLERANCES:
FRACTIONAL ±
ANGULAR ±
TWO PLACE DECIMAL ±.01
THREE PLACE DECIMAL ±.005
FINISHED SURFACES RMS
BREAK SHARP CORNERS R.
REMOVE ALL BURRS
DO NOT SCALE DRAWING
MATERIAL —

DRAWN USHING DATE 10-3-83
CHECKED [illegible] DATE 10-3-83
APPROVED WAYCOTT DATE 11-9-83

HAEMONETICS®
HAEMONETICS CORPORATION
400 Wood Road, Braintree, Massachusetts 02184

PROC/EXP PCB SCHEMATIC

D | 14565 | REV. D

SCALE — | SHEET 4 OF 4

PCS,CS4	D14564
USED ON	N.H.A.

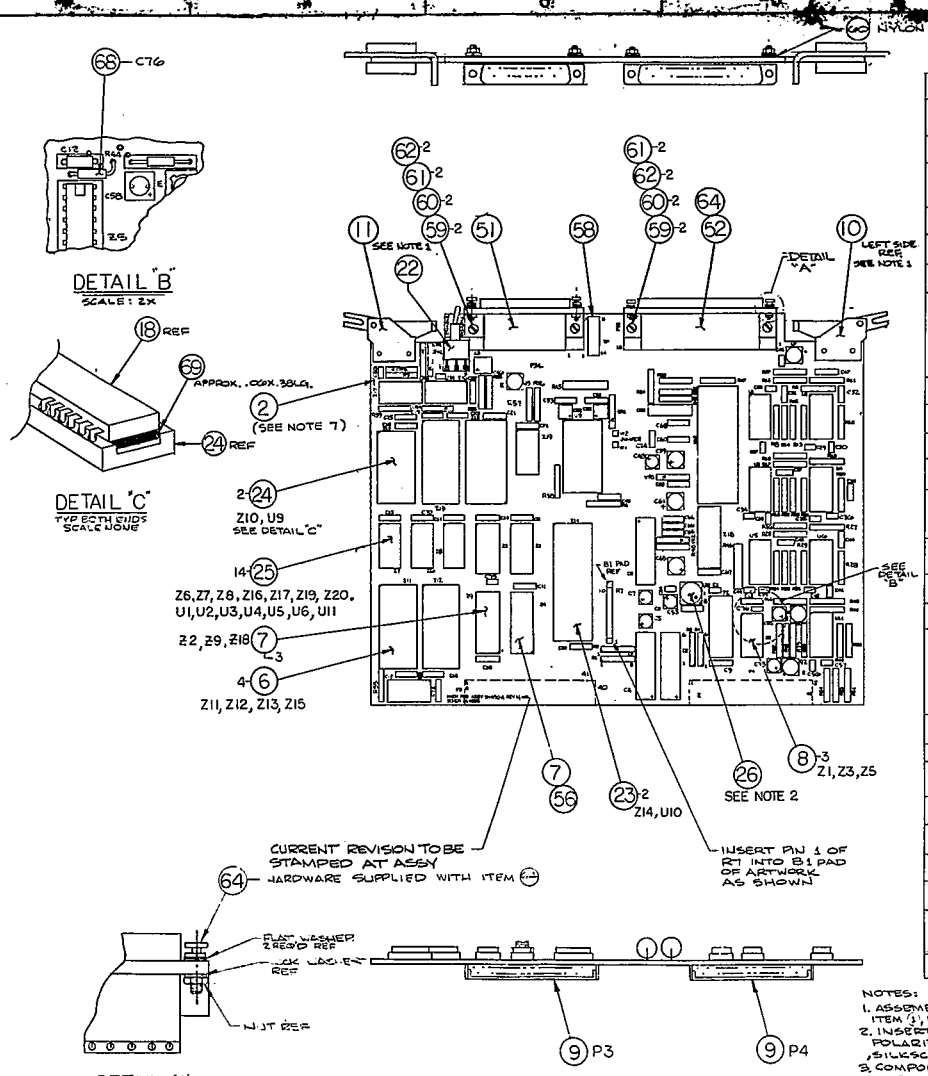

7. INSPECT DRAWING FOR "PROCESS/EXPANSION P.C.B. DRILLING" AT REVISION LEVEL "B".

REVISIONS				
ZONE	LTR	DESCRIPTION	DATE	APPROVED
	-	REV PER E22-4949	2/6/80	
D4T6		REV PER E22-4987		

REFERENCE DESIGNATION	ITEM NO	QTY	PART NO.	DESCRIPTION
R17	77	1	A33132-039	RESISTOR, 3.9K OHM, 1%
Z20	42	1	A30017-408	IC, NAT #NM74C08N/A+ Quad and Gates
Z19	57	1	A30000-074	IC, TI #SN74LS74AN3-01, Dual Flip-Flop
Z17	45	1	A30001-489	IC, MOT #MC1489APD, Quad Line/Rec
Z16	44	1	A30001-488	IC, MOT #MC1488PD, Quad Line/Dv
Z15	43	1	A30008-251	IC, INTEL #OP8251A, Prog Comm Int
Z14	17	1	A30008-156	IC, INTEL #OP8156H, 2048 Bit Ram
(SEE NOTE 5) Z10	18	1	A15229	IC, MOSTEK #MK4B207B-20 NON VOL RAM
Z9	4	1	A30008-282	IC, INTEL #OP8282, Oct/Latch
Z8	16	1	A30007-404	IC, TI #SN74LS04N3-01, Hex-Inv
Z7	15	1	A30007-402	IC, TI #SN74LS02N3+01, Quad-Nor-Gates
Z6	14	1	A30007-400	IC, TI #SN74LS00N3-01, Quad-Nand Gates
Z4	56	1	A30074-245	SN74LS245N3-01
Z2, Z18	13	2	A30074-244	IC, TI #SN74LS244N3-01, Buffer/Driver
Z1,Z3,Z5	5	3	A30074-138	IC, TI #SN74LS138N3-01, Dec/Demult
C76	68	1	A13545	CAP SP#292 CCOG 1020501 1000 PF 50V
VR1-VR2 (SEE NOTE 3)	54	2	A40004-743	Diode, Zener, TI #1N4743A
U11	21	1	A30000-348	IC, National #LM348N/A+
U10	46	1	A30007-550	IC, AD #7580BD/+ A/D Conv
U9 (SEE NOTE 3)	47	1	A30001-100	IC, Burr Brown #PGA100AG PROG/GAIN MULT/IN
U8	19	1	A30000-584	IC, AD #AD584JH/883B Volt Ref, (8 Pin Can)
U7	50	1	A30000-590	IC, AD #AD590KH/883B Temp/Trans
U2,U4,U6	49	3	A30000-007	IC, PMI #OP07BICY OP/AMP
U1,U3,U5	48	3	A30000-010	IC, PMI #OP-10BICY OP/AMP
SW2	22	1	A12752	Switch, c/k #7101MSWAP SPDT

REFERENCE DESIGNATION	ITEM No.	QTY.	PART No.	DESCRIPTION
R58	67	1	A33132-001	RESISTOR, 20 OHM, 1% RN55D
R45,R46	38	2	A33352-001	Resistor, 100 ohm,5%,1/2W
R44	41	1	A33131-499	Resistor, 4.99K ohm, 1%, RN55D
R42,R54	40	2	A33130-049	Resistor, 49.9 ohm, 1%, RN55D
R41,R53	39	2	A33130-499	Resistor, 499 ohm, 1%, RN55D
R39				Resistor,
R36	75	1	A33131-499	Resistor, 4.99M OHM, 1% RN55D
R35,R49,R56	37	3	A33136-001	Resistor, 1M ohm, 1%, RN55D
R34				Resistor,
R31				Resistor,
R23				Resistor,
R15				Resistor,
R32,R50 R52	34	3	A33134-002	Resistor, 20K ohm, 1%, RN55D
R11,R13,R19,R21,R27,R29	73	6	A33132-499	RESISTOR, 49.9K OHM, 1% RN55D
R9,R25	35	2	A33133-002	Resistor, 2K ohm, 1%, RN55D
R12,R14,R22,R28, R30,R30	74	6	A33133-499	RESISTOR, 499K OHM, 1% RN55D
R8,R10,R16,R18, R24,R26,R33, R37-R39,R40,R43, R47,R48,R51	33	14	A33134-001	Resistor, 10K ohm, 1%, RN55D
R7	63	1	A 442	Resistor, NET, Bourns # 4310R-101-103
R5-R6,R55,R59	36	4	A33133-001	Resistor, 1K ohm, 1%, RN55D
R2,R4	66	2	A14580-26	Resistor, NET, Bourns # 4306R-101-332
R1,R3	65	2	A13547-19	Resistor, NET, Bourns 4306R-101-102
Q1-Q2 (SEE NOTE 3)	20	2	A44002-222	Transistor, TI #2N2222A
CR2-CR5 (SEE NOTE 3)	71	4	A40004-148	DIODE TI # 1N4148
CR1 (SEE NOTE 3)	27	1	A11350	DIODE, H.P. #5082-2811
C75	70	1	A21142-001	CAP, CENTRALAB #CN15C101K, 100PF
C74	72	1	A21140-033	CAP, CENTRALAB #CN15C330K, 33PF
C69	53	1	A25133-012	Cap, TRW #X363UM, .012uf,5V,100V
C46,C59,C61,C63	55	4	A26256-033	Cap, SP #199D336X0016DE2, 33uf, 16 V
C31-C32,C37-C38, C43-C44	31	6	A21144-022	Cap, Centr #CW30C224K, .22uf, 50V
C27-C30,C33-C36, C39-C42,C45,C54, C56,C57	30	16	A21155-001	Cap, Centr #CY20C104M, .1uf, 50V
C24,C26	32	2	A21141-033	Cap, Centr #CW15C331K, 330pf, 50V
C47, C49,C51,C53, C60,C62,C64-C66, C.8,C71	3	11	A 11351	Cap, AVX #MD015C103KAA, .01uf, 50V, 10%
C3,C5,C7,C48,C50, C52,C58,C73	28	8	A16256-001	Cap, SP #199D105X0025A1, 1uf, 25V
C2,C4,C6	29	3	A26178-001	Cap, SP #501D107F025N1, 100uf, 25V
C8-C23,C25,C67, C70,C72	12	20	A15630	CAP, AVX #MD015C104KAA .1uf, 50V, 10%

REFERENCE DESIGNATION	ITEM No.	QTY.	PART No.	DESCRIPTION

NOTES:

1. ASSEMBLE CARD EXTRACTORS, ITEMS (10) & (11), TO P.C. BOARD, ITEM (1), BY USING ROLL PINS, SUPPLIED WITH EXTRACTORS.
2. INSERT SOCKET, ITEM (24), INTO BOARD, BE SURE THAT POLARIZATION DOT, IS ALIGNED WITH PIN 8 SILKSCREENED ON THE BOARD.
3. COMPONENTS TO BE TESTED & QUALIFIED PER HAEMONETICS QCP E122, PARAGRAPH 5.2, THERMAL SHOCK, IS OPTIONAL.
4. P.C.B. ASSY'S ARE TO BE HANDLED AND SHIPPED IN ANTI-STATIC BAGS.
5. APPLY SEALANT, ITEM (18), BETWEEN IC Z10, ITEM (69), AND SOCKET, ITEM (24), AS SHOWN ON DETAIL "C".
6. FOR REWORK INSTRUCTIONS SEE HAEM EWO NO. A16925.

PCB	C-9054	
CC4	D4423	
USED ON	N.W.A.	

THIS DOCUMENT CONTAINS INFORMATION WHICH IS PROPRIETARY TO HAEMONETICS CORPORATION, AND ITS DISTRIBUTION IS LIMITED TO FURTHERING THE BUSINESS INTERESTS OF HAEMONETICS CORPORATION.

UNLESS OTHERWISE SPECIFIED
DIMENSIONS ARE IN INCHES
TOLERANCES:
FRACTIONAL ±
ANGULAR ±
TWO PLACE DECIMAL ±.01
THREE PLACE DECIMAL ±.005
FINISHED SURFACES PRO
BREAK SHARP CORNERS R.
REMOVE ALL BURRS
DO NOT SCALE DRAWING
MATERIAL
SEE BOM

DRAWN [illegible] DATE 2-20-80
CHECKED [illegible] DATE 2-21-80
APPROVED [illegible] DATE 2-21-80

HAEMONETICS®
HAEMONETICS CORPORATION
400 Wood Road, Braintree, Massachusetts 02184

PROCESSOR/EXPANSION
P.C.B ASSY

D | 14564 | H

SCALE FULL | SHEET 1

BILL OF MATERIALS	HAEMONETICS CORP. 400 WOOD ROAD, BRAINTREE	PROD. IDENT. PCS, CS 4	BOM D 14564	REV. H	SHEET 1 OF 4
TITLE: PROCESSOR/EXPANSION PCB ASS'Y		DRWN BY: MDD/VDG DATE: 9/83	CHECKED: [illegible]	DATE: 10-27-83	
			APPROVED: WAYLETT	DATE: 11-9-83	

ITEM	QUANTITY G4	G3	G2	G1	PART NO./DWG NO.	DESCRIPTION	BOM	REFERENCE DESIGNATION
1				REF	D 14565	PROCESSOR/EXPANSION PCB, SCHEMATIC		
2				1	D 14566	PROCESSOR/EXPANSION PCB, DRILLING		
3				11	A 11351	CAP, AVX #MD015C103KAA, .01uf, 50V, 10%		See CHART
4				1	A 30008-282	IC, INTEL #QP8282, OCTAL LATCH		Z9
5				3	A 30074-138	IC, TI #SN74LS138N3-01, DECODER/DEMULTIPLEXER		Z1,Z3,Z5
6				4	A 11560-07	SOCKET, AUGAT #528-AG11D (28 PIN)		Z11-Z13,Z15REF
7				4	A 11560-05	SOCKET, AUGAT #520-AG11D (20 PIN)		Z2,4,9,18 REF
8				3	A 11560-03	SOCKET, AUGAT #516-AG11D (16 PIN)		Z1,Z3,Z5 REF
9				2	A 11294	CONN, AMP #202933-2 (HEADER)		P3,P4
10				1	A 11802	LEFT, PC CARD EXTRACTOR		
11				1	A 11803	RIGHT, PC CARD EXTRACTOR		
12				20	A 15630	CAP, AVX #MD015C104KAA, .1MF, 50V, 10%		SEE CHART
13				2	A 30074-244	IC, TI #SN74LS244N3-01, BUFFER/DRIVER		Z2,Z18
14				1	A 30007-400	IC, TI #SN74LS00N3-01, QUAD-NAND GATES		Z6
15				1	A 30007-402	IC, TI #SN74LS02N3-01, QUAD-NOR GATES		Z7
16				1	A 30007-404	IC, TI #SN74LS04N3-01, HEX-INV		Z8
17				1	A 30008-156	IC, INTEL QP8156H, 2048 BIT RAM		Z14
18				1	A 15229	IC, MOSTEK #MK48Z02B-20 NON-VOL RAM		Z10
19				1	A 30000-584	IC, ANALOG DEV #AD584JH/883B, VOLT REF		U8

LTR	REVISION	APP'D	DATE	LTR	REVISION	APP'D	DATE
M	REL PER ECO 3192	[illegible]	11-9-83	F	REV ECO-4414 CADOSE 10-23-85	[illegible]	10/23/85
B	REV PER ECO 3299 CADOSE 3-14-84	[illegible]	4/2/84	G	REV ECO-4737 FEE 7-29-86	R. Harris	8/5/86
C	REV ECO-3385 CADOSE 4-5-84	[illegible]	4/9/84	H	REV ECO-4949 FEE 2-6-87	[illegible]	2/6/87
D	REV ECO-3555 CADOSE 8/13/84	[illegible]	8-24-84				
E	REV ECO-3875 CADOSE 5-16-85	[illegible]	5-21-85				

CS 4	D-14623		
PCS	D-14354		
USED ON	N.H.A.	USED ON	N.H.A.
TITLE: PROCESSOR/EXPANSION PCB ASSEMBLY			
BOM D 14564		REV. H	

8-23

BOM D 14564	TITLE PROCESSOR/EXPANSION PCB ASS'Y	HAEMONETICS CORP. 400 WOOD ROAD, BRAINTREE	REV. H	SHEET 2 OF 4

ITEM	QUANTITY G4	G3	G2	G1	PART NO./DWG NO.	DESCRIPTION	BOM	REFERENCE DESIGNATION
20				2	A 44002-222	TRANSISTOR, TI 2N2222A		Q1,Q2
21				1	A 30000-348	IC, NATIONAL #LM348N/A+		U11
22				1	A 10752	SWITCH, C&K #7101MD9AB SPDT		SW2
23				2	A 11560-08	SOCKET, AUGAT #540-AG11D (40 PIN)		Z14,U10, REF
24				2	A 11560-06	SOCKET, AUGAT #524-AG11D (24 PIN)		Z10,U9 REF
25				14	A 11560-02	SOCKET, AUGAT #514-AG11D (14 PIN)		See CHART
26				1	A 11513-03	SOCKET, AUGAT #8058-1G49 (8 PIN CAN)		U8 REF
27				1	A 11350	DIODE, H.P. #5082-2811		CR1
28				8	A 26156-001	CAP, SPRAGUE #199D105X0025AA1, 1uf,25v		See CHART
29				3	A 26178-001	CAP, SPRAGUE #501D107F025MN, 100uf,25v		C2,C4,C6
30				16	A 21155-001	CAP, CENTRALAB #CY20C104M, .1uf,50v,10%		See CHART
31				6	A 21144-022	CAP, CENTRALAB #CW30C224K,.22uf,10%,50v		See CHART
32				2	A 21141-033	CAP, CENTRALAB #CW15C331K,330pf,10%,50v		C24,C26
33				14	A 33134-001	RESISTOR, 10K OHM, 1%, RN55D		See CHART
34				3	A 33134-002	RESISTOR, 20K OHM, 1%, RN55D		See CHART
35				2	A 33133-002	RESISTOR, 2K OHM, 1%, RN55D		R9,R25
36				4	A 33133-001	RESISTOR, 1K OHM, 1%, RN55D		R5,R6,R55,R59
37				3	A 33136-001	RESISTOR, 1M OHM, 1%, RN55D		R35,R49,R56
38				2	A 33352-001	RESISTOR, 100 OHM, 5%, 1/2W		R45,R46
39				2	A 33130-499	RESISTOR, 499 OHM, 1%, RN55D		R41,R53
40				2	A 33130-049	RESISTOR, 49.9 OHM, 1%, RN55D		R42,R54
41				1	A 33131-499	RESISTOR, 4.99K OHM,1%, RN55D		R44
42				1	A 30017-408	IC,NAT #MM74C08N/A+ QUAD AND GATES		Z20
43				1	A 30008-251	IC, INTEL QP8251A, PROG COMM INT		Z15
44				1	A 30001-488	IC, MOTOROLA #MC1488PD, QUAD LINE DRIVER		Z16
45				1	A 30001-489	IC, MOTOROLA #MC1489APD, QUAD LINE REC		Z17
46				1	A 30007-550	IC, ANALOG DEV #AD7550 BD/+		U10
47				1	A 30001-100	IC, BURR BROWN #PGA100AG PROG/GAIN MULTIN		U9

BOM D 14564	TITLE PROCESSOR/EXPANSION PCB ASS'Y	HAEMONETICS CORP. 400 WOOD ROAD, BRAINTREE	REV. H	SHEET 3 OF 4

ITEM	QUANTITY G4	G3	G2	G1	PART NO./DWG NO.	DESCRIPTION	BOM	REFERENCE DESIGNATION
48				3	A 30000-010	IC, PMI #OP10BICY, OP/AMP		U1,U3,U5
49				3	A 30000-007	IC, PMI, #OP07BICY, OP/AMP		U2,U4,U6
50				1	A 30000-590	IC, ANALOG DEV, #AD590KH/883B, TEMP TRANS		U7
51				1	A 14620-01	CONN, AMP #206604-2 25 PIN RIGHT ANG		P34
52				1	A 14620-02	CONN, AMP #206816-2 37 PIN RIGHT ANG		P33
53				1	A 25133-012	CAP, TRW #X363UW, .012uf, 5%, 100V		C69
54				2	A 40004-743	DIODE, ZENER TI #1N4743A		VR1,VR2
55				4	A 26256-033	CAP, SPRAGUE #199D336X0016DE2,33uf,16 V		C46,C59,C61,C63
56				1	A 30074-245	IC, TI #SN74LS245N3-01 OCTAL BUS TRANS		Z4
57				1	A 30000-074	IC, TI #SN74LS74AN3-01, DUAL FLIP-FLOPS		Z19
58				1	A 14622	CONN, BERGSTIKS STRAIGHT DB ROW, 14 PIN, #65610-114		TP
59				4	A 60110-506	SCR, MACH, SLTD PAN HD, SS, #4-40x.31LG		
60				4	A 56125-005	WASHER, PLAIN RGLR, NYLON #4		
61				4	A 56221-005	WASHER, SPLIT LOCK, RGLR, SS, #4		
62				4	A 31110-005	NUT, RGLR, HEX, SS, #4-40		
63				1	A 11442	RES, NETWORK, BOURNS #4310R-101-103		R7
64				2	A 14631	LOCK POST, AMP #206514-1		P33, P34 REF
65				2	A 13547-19	RES, NETWORK, BOURNS #4306R-101-102		R1, R3
66				2	A 14680-26	RES, NETWORK, BOURNS #4306R-101-332		R2, R4
67				1	A 33132-001	RESISTOR, 100 ohm, 1%, RN55D		R58
68				1	A 13545	CAP, SP#292CC0G102050L, 1000PF, 50V		C76
69				.001	A10214-02	SEALANT, RTV #108, CLEAR		[illegible]
70				1	A21142-001	CAP, CENTRALAB #CN15C101K 100PF		C75
71				4	A40004-148	DIODE, TI 1N4148		CR2-CR5
72				1	A21140-033	CAP, CENTRALAB #CN15C330K 33PF		C74
73				6	A33132-499	RESISTOR, 49.9K OHM, 1% RN55D		SEE CHART
74				6	A33133-499	RESISTOR, 499K OHM, 1% RN55D		SEE CHART
75				1	A33134-499	RESISTOR, 4.99M OHM, 1% RN55D		R36

BOM D14564	TITLE	HAEMONETICS CORP. 400 WOOD ROAD, BRAINTREE	REV. H	SHEET 4 OF 4

ITEM	QUANTITY G4	G3	G2	G1	PART NO./DWG NO.	DESCRIPTION	BOM	REFERENCE DESIGNATION
76				REF	A16925	INSTRUCTIONS, REWORK		
						(EXPANSION PCB)		
77				1	A33132-039	RESISTOR, 3.9K OHM, 1%		R17

BOM D14564	REV. H

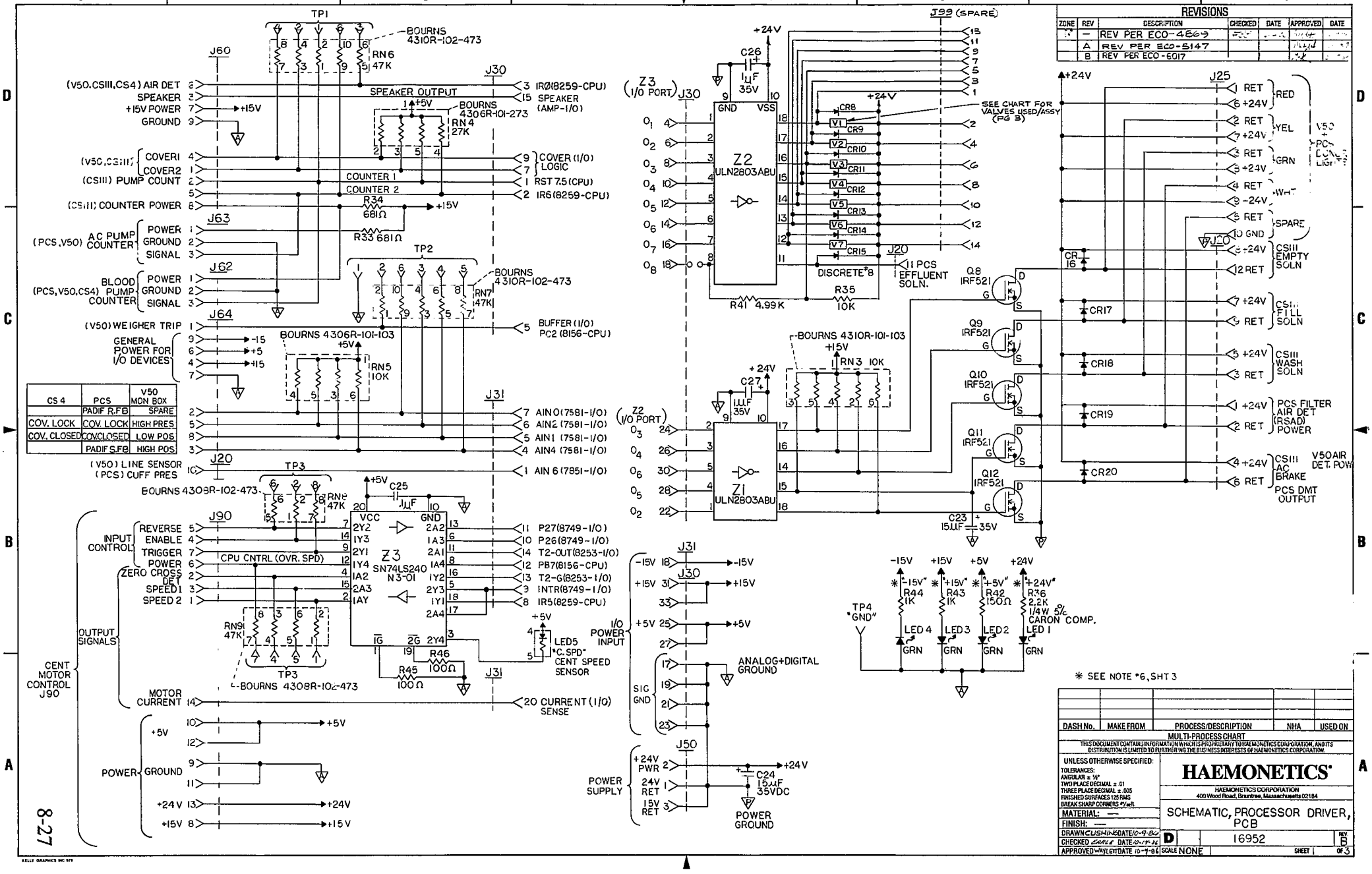
REVISIONS
ZONE REV DESCRIPTION CHECKED DATE APPROVED DATE
— REV PER ECO-4869
A REV PER ECO-5147
B REV PER ECO-6017
TP1
BOURNS 4310R-102-473
RN6 47K
J60
J30
(V50,CSIII,CS4) AIR DET
SPEAKER
+15V POWER
GROUND
SPEAKER OUTPUT
BOURNS 4306R-101-273
RN4 27K
(V50,CSIII) COVER1
COVER2
(CSIII) PUMP COUNT
COUNTER 1
COUNTER 2
(CSIII) COUNTER POWER
R34 681Ω
R33 681Ω
IR0(8259-CPU)
SPEAKER (AMP-I/O)
COVER (I/O) LOGIC
RST 7.5(CPU)
IR6(8259-CPU)
J63
(PCS,V50) AC PUMP COUNTER
POWER
GROUND
SIGNAL
J62
(PCS,V50,CS4) BLOOD PUMP COUNTER
TP2
BOURNS 4310R-102-473
RN7 47K
J64
(V50) WEIGHER TRIP
BUFFER (I/O) PC2 (8156-CPU)
GENERAL POWER FOR I/O DEVICES
BOURNS 4306R-101-103
RN5 10K
CS 4 | PCS | V50 MON BOX
PADIF R.F.B | SPARE
COV. LOCK | COV. LOCK | HIGH PRES
COV. CLOSED | COV.CLOSED | LOW POS
PADIF S.F.B | HIGH POS
J31
AIN0(7581-I/O)
AIN2 (7581-I/O)
AIN1 (7581-I/O)
AIN4 (7581-I/O)
(V50) LINE SENSOR
(PCS) CUFF PRES
AIN 6 (7851-I/O)
J20
TP3
BOURNS 4308R-102-473
RN8 47K
C25 .1μF
J90
INPUT CONTROL
REVERSE
ENABLE
TRIGGER
POWER
CPU CNTRL (OVR. SPD)
ZERO CROSS DET
SPEED1
SPEED 2
OUTPUT SIGNALS
CENT MOTOR CONTROL J90
Z3 SN74LS240 N3-01
VCC GND
P27(8749-I/O)
P26(8749-I/O)
T2-OUT(8253-I/O)
PB7(8156-CPU)
T2-G(8253-I/O)
INTR(8749-I/O)
IR5(8259-CPU)
RN9 47K
R46 100Ω
R45 100Ω
LED5
"C.SPD" CENT SPEED SENSOR
MOTOR CURRENT
CURRENT (I/O) SENSE
POWER
+5V
GROUND
+24V
+15V
Z3 (I/O PORT)
Z2 ULN2803ABU
C26 1μF 35V
GND VSS
R41 4.99K
R35 10K
DISCRETE #8
J20
11 PCS EFFLUENT SOLN.
SEE CHART FOR VALVES USED/ASSY (PG 3)
J99 (SPARE)
Z2 (I/O PORT)
Z1 ULN2803ABU
C27 1μF 35V
BOURNS 4310R-101-103
RN3 10K
Q8 IRF521
Q9 IRF521
Q10 IRF521
Q11 IRF521
Q12 IRF521
C23 15μF 35V
CR16
CR17
CR18
CR19
CR20
J25
RET
+24V
-24V
GND
RED
YEL
GRN
WHT
SPARE
CSIII EMPTY SOLN
CSIII FILL SOLN
CSIII WASH SOLN
PCS FILTER AIR DET (RSAD) POWER
CSIII AC BRAKE
PCS DMT OUTPUT
V50 AIR DET. POW.
-15V
+5V
+24V
TP4 "GND"
R44 1K
R43 1K
R42 150Ω
R36 2.2K 1/4W 5% CARON COMP.
LED 4
LED 3
LED 2
LED 1
GRN
* SEE NOTE #6, SHT 3
I/O POWER INPUT
SIG GND
ANALOG+DIGITAL GROUND
POWER SUPPLY
J50
C24 15μF 35VDC
POWER GROUND
DASH No. MAKE FROM PROCESS/DESCRIPTION NHA USED ON
MULTI-PROCESS CHART
THIS DOCUMENT CONTAINS INFORMATION WHICH IS PROPRIETARY TO HAEMONETICS CORPORATION, AND ITS DISTRIBUTION IS LIMITED TO FURTHERING THE BUSINESS INTERESTS OF HAEMONETICS CORPORATION.
UNLESS OTHERWISE SPECIFIED:
TOLERANCES:
ANGULAR ± ½°
TWO PLACE DECIMAL ± .01
THREE PLACE DECIMAL ± .005
FINISHED SURFACES 125 RMS
BREAK SHARP CORNERS #½ R.
MATERIAL: —
FINISH: —
DRAWN CUSHIN DATE 10-9-86
CHECKED EARLE DATE 10-14-86
APPROVED WAYLETT DATE 10-7-86
HAEMONETICS
HAEMONETICS CORPORATION
400 Wood Road, Braintree, Massachusetts 02184
SCHEMATIC, PROCESSOR DRIVER, PCB
D 16952 REV B
SCALE NONE SHEET 1 OF 3

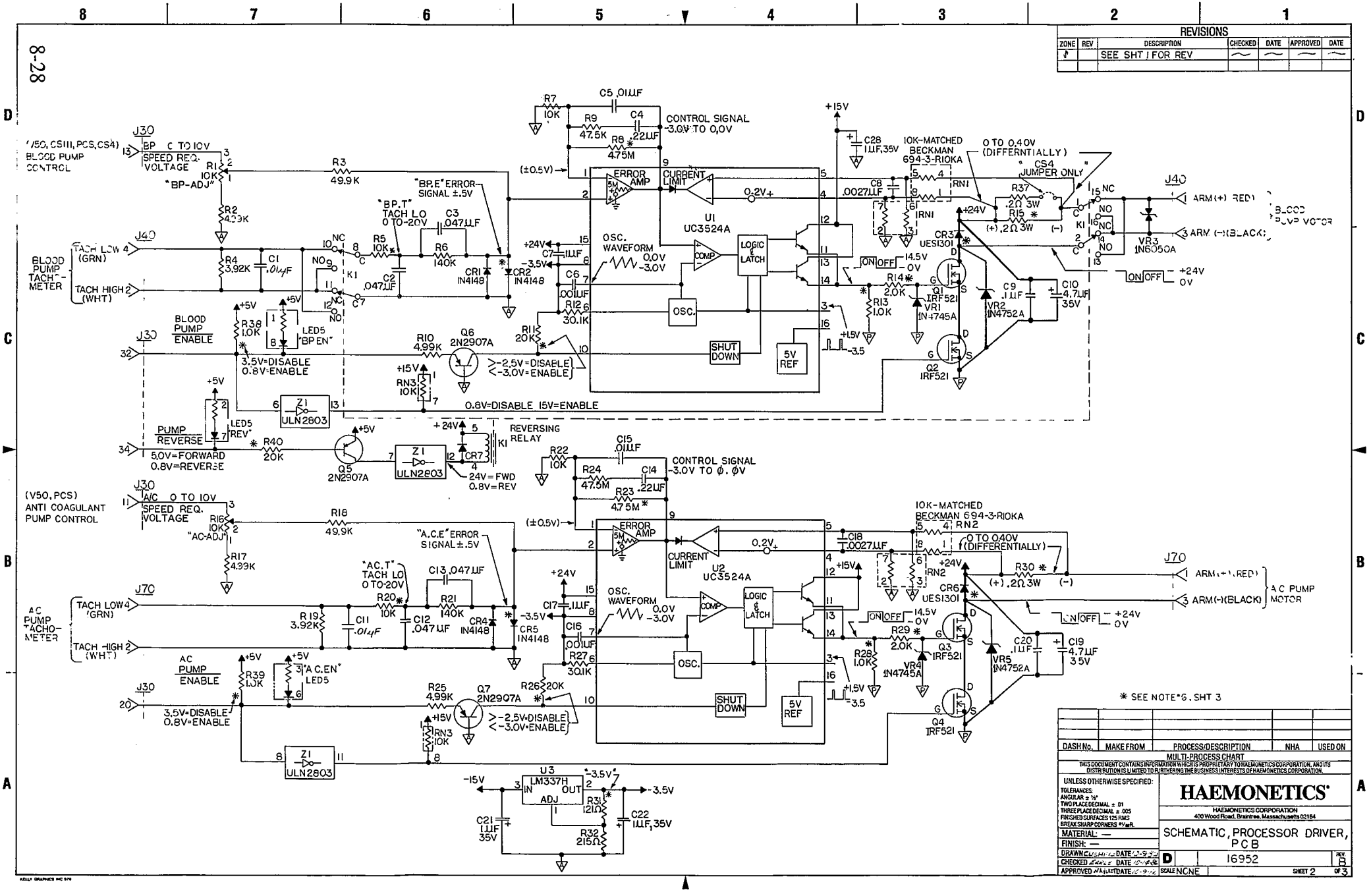
REVISIONS
ZONE | REV | DESCRIPTION | CHECKED | DATE | APPROVED | DATE
SEE SHT 1 FOR REV
(V50, CS111, PCS, CS4) BLOOD PUMP CONTROL
J30
BP 0 TO 10V SPEED REQ. VOLTAGE
R1 10K "BP-ADJ"
R2 4.99K
R3 49.9K
"BP.E" ERROR SIGNAL ±.5V
"BP.T" TACH LO 0 TO -20V
C3 .047µF
R5 10K
R6 140K
C2 .047µF
CR1 1N4148
CR2 1N4148
BLOOD PUMP TACHOMETER
TACH LOW (GRN)
TACH HIGH (WHT)
J40
R4 3.92K
C1 .01µF
BLOOD PUMP ENABLE
R38 1.0K
LED5 "BP EN"
3.5V=DISABLE 0.8V=ENABLE
R10 4.99K
Q6 2N2907A
>-2.5V=DISABLE <-3.0V=ENABLE
RN3 10K
Z1 ULN2803
0.8V=DISABLE 15V=ENABLE
PUMP REVERSE
LED5 "REV"
5.0V=FORWARD 0.8V=REVERSE
R40 20K
Q5 2N2907A
REVERSING RELAY
CR7
24V=FWD 0.8V=REV
R7 10K
C5 .01µF
R9 47.5K
C4 .22µF
R8 4.75M
CONTROL SIGNAL -3.0V TO 0,0V
(±0.5V)
ERROR AMP
CURRENT LIMIT
U1 UC3524A
OSC. WAVEFORM 0.0V -3.0V
COMP
LOGIC & LATCH
OSC.
SHUT DOWN
5V REF
C7 .1µF
C6 .001µF
R12 30.1K
R11 20K
+15V
C28 1µF,35V
10K-MATCHED BECKMAN 694-3-R10KA
0 TO 0.40V (DIFFERNTIALLY)
CS4 JUMPER ONLY
C8 .0027µF
RN1
R37 .2Ω 3W
R15 (+) .2Ω 3W (-)
CR3 UES1301
Q1 IRF521
VR1 1N4745A
VR2 1N4752A
C9 .1µF
C10 4.7µF 35V
Q2 IRF521
R14 2.0K
R13 1.0K
ON OFF 14.5V 0V
ARM(+) RED
ARM (-)(BLACK)
BLOOD PUMP MOTOR
VR3 1N6050A
ON OFF +24V 0V
(V50, PCS) ANTI COAGULANT PUMP CONTROL
A/C 0 TO 10V SPEED REQ. VOLTAGE
R16 10K "AC-ADJ"
R17 4.99K
R18 49.9K
"A.C.E" ERROR SIGNAL ±.5V
"AC.T" TACH LO 0 TO -20V
C13 .047µF
R20 10K
R21 140K
C12 .047µF
CR4 1N4148
CR5 1N4148
AC PUMP TACHOMETER
TACH LOW (GRN)
TACH HIGH (WHT)
J70
R19 3.92K
C11 .01µF
AC PUMP ENABLE
R39 1.0K
"A.C.EN" LED5
3.5V=DISABLE 0.8V=ENABLE
R25 4.99K
Q7 2N2907A
>-2.5V=DISABLE <-3.0V=ENABLE
RN3 10K
R22 10K
C15 .01µF
R24 47.5M
C14 .22µF
R23 4.75M
CONTROL SIGNAL -3.0V TO ϕ, ϕV
U2 UC3524A
C17 .1µF
C16 .001µF
R27 30.1K
R26 20K
C18 .0027µF
10K-MATCHED BECKMAN 694-3-R10KA
RN2
0 TO 0.40V (DIFFERENTIALLY)
R30 (+) .2Ω 3W (-)
CR6 UES1301
Q3 IRF521
VR4 1N4745A
VR5 1N4752A
C20 .1µF
C19 4.7µF 35V
Q4 IRF521
R29 2.0K
R28 1.0K
ARM(+) RED
ARM(-)(BLACK)
AC PUMP MOTOR
* SEE NOTE 6, SHT 3
U3 LM337H
IN OUT ADJ
R31 121Ω
R32 215Ω
C21 1µF 35V
C22 1µF,35V
-15V
-3.5V
DASH No. | MAKE FROM | PROCESS/DESCRIPTION | NHA | USED ON
MULTI-PROCESS CHART
THIS DOCUMENT CONTAINS INFORMATION WHICH IS PROPRIETARY TO HAEMONETICS CORPORATION, AND ITS DISTRIBUTION IS LIMITED TO FURTHERING THE BUSINESS INTERESTS OF HAEMONETICS CORPORATION.
UNLESS OTHERWISE SPECIFIED:
TOLERANCES:
ANGULAR ± ½°
TWO PLACE DECIMAL ± .01
THREE PLACE DECIMAL ± .005
FINISHED SURFACES 125 RMS
BREAK SHARP CORNERS ⅝"/ea R.
MATERIAL: —
FINISH: —
DRAWN DATE
CHECKED DATE
APPROVED DATE
HAEMONETICS
HAEMONETICS CORPORATION
400 Wood Road, Braintree, Massachusetts 02184
SCHEMATIC, PROCESSOR DRIVER, PCB
D 16952 REV. B
SCALE NONE SHEET 2 OF 3

REVISIONS						
ZONE	REV	DESCRIPTION	CHECKED	DATE	APPROVED	DATE
		SEE SHT 1 FOR REV				

I/O PCB LED OUTPUT INDICATOR
(CR1 – CR4 MOUNTED ON I/O PCB
ABOVE J30 CONNECTOR)
(REFERENCE ONLY)

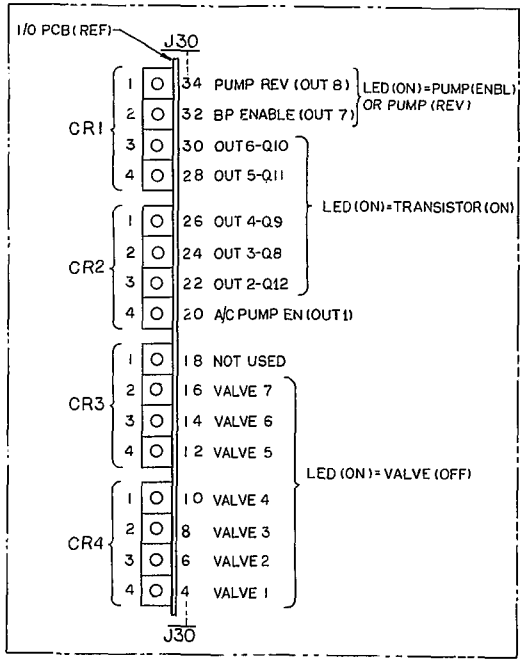

VALVE USE CHART					
	CS-PLUS -01 CS III	-02 V50	-03 PCS	-04 CS-4	-05 V50 AUTO SURGE
VALVE 1	NONE	VALVE 1	CUFF EN	WASH CLAMP PV1 YEL	VALVE 1
VALVE 2	NONE	VALVE 2	CUFF CNTRL	XFER CLAMP PV2 BLUE	VALVE 2
VALVE 3	NONE	VALVE 3	EFFLUENT CLAMP	RESV CLAMP PV3 RED	VALVE 3
VALVE 4	NONE	VALVE 4	INTERLOCK CONTROL	INTERLOCK CONTROL	VALVE 4
VALVE 5	NONE	VALVE 5	INTERLOCK ENABLE	NONE	VALVE 5
VALVE 6	NONE	CUFF	NONE	INTERLOCK ENABLE	CUFF
VALVE 7	NONE	NONE	NONE	NONE	VALVE 6
DISC 8	NONE	NONE	EFFLUENT SOLENOID	NONE	NONE

REF DES	COMPONENT	GND	+5V	+15V	-15V	+24V	-3.5V	DECOUPLE CAPS
U1	UC3524A					15	8	C7
U2	UC3524A					15	8	C17
U3	LM337H/A+				3		2	C21,C22
Z1	ULN2903ABU	9				10		C 21
Z2	ULN2903ABU	9				10		C 20
Z3	SN74LS240N3-01	10	20					C 25

SPARES	
J31-2,3,15,16,17,19	
J30-29	RN5-2
	TP1-5
RN3-9,10	TP3-3
RN4-6	RN8-3,4

COMPONENT DESIGNATION	
REF DES	LAST No. USED
C	C28
CR	CR20
K	K1
Q	Q13
R	R40
U	U3
V	V7
Z	Z3
LED	5
RN	9
TP	4

NOTES:

1. U.O.S. ALL RESISTORS ARE RN55DXXXXF (1/8 WATT, ±1%).
2. U.O.S. ALL CAPACITORS ARE 50V ± 10%.
3. U.O.S. ALL DIODES ARE 1N4004.
4. COMPONENT DESCRIPTIONS AND MFR'S P/N ARE FOR REFERENCE ONLY. REFER TO BILL OF MATERIAL D-13117-1,2,3,4,5, FOR COMPLETE MFR'S P/N AND DESCRIPTION.
5. U.O.S. ALL VOLTAGES ARE REFERENCED TO GROUND.
6. "*" NEXT TO SCHEMATIC SYMBOLS INDICATE RELATED COMPONENT TEST POINTS ON PCB ASSEMBLY THAT ARE ALSO INDICATED BY AN "*".
7. MNEMONICS IN QUOTES REFER TO THOSE PRESENT ON THE PCB SILK SCREEN.
8. JUMPER WIRE TO R37 INSTALLED FOR THE -01 AND -04 ASSEMBLY ONLY.

DASH No.	MAKE FROM	PROCESS/DESCRIPTION	NHA	USED ON

MULTI-PROCESS CHART

THIS DOCUMENT CONTAINS INFORMATION WHICH IS PROPRIETARY TO HAEMONETICS CORPORATION, AND ITS DISTRIBUTION IS LIMITED TO FURTHERING THE BUSINESS INTERESTS OF HAEMONETICS CORPORATION.

UNLESS OTHERWISE SPECIFIED:
TOLERANCES:
ANGULAR ± ½°
TWO PLACE DECIMAL ± .01
THREE PLACE DECIMAL ± .005
FINISHED SURFACES 125 RMS
BREAK SHARP CORNERS .5/.1
MATERIAL: —
FINISH: —
DRAWN CLUSHING DATE 11-9-86
CHECKED [illegible] DATE 10-4-86
APPROVED WALLETT DATE 10-4-86

HAEMONETICS
HAEMONETICS CORPORATION
400 Wood Road, Braintree, Massachusetts 02184

SCHEMATIC PROCESSOR DRIVER PCB

D 16952 REV B

SCALE NONE SHEET 3 OF 3

KELLY GRAPHICS INC 979

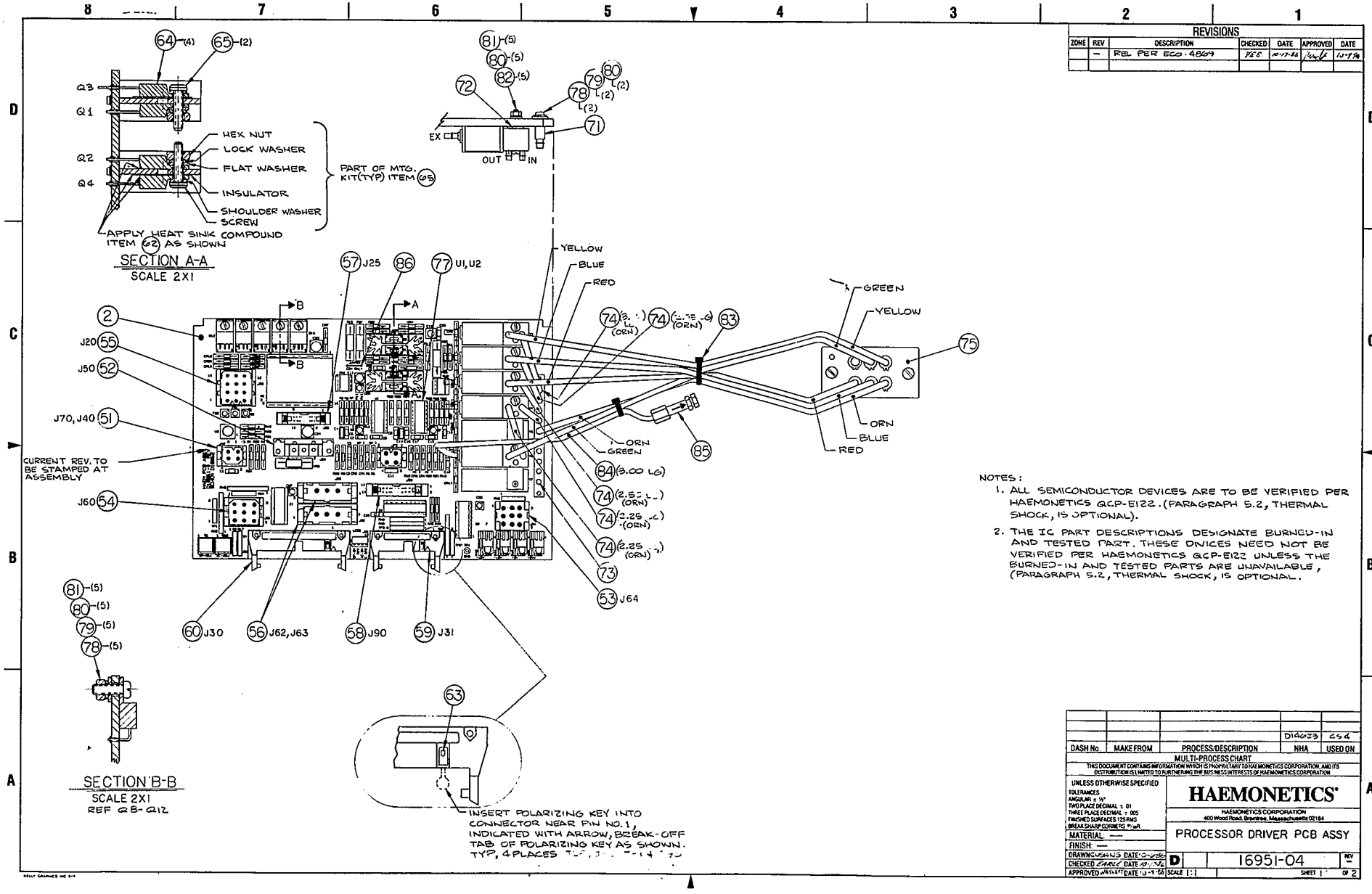
REVISIONS
ZONE REV DESCRIPTION CHECKED DATE APPROVED DATE
– REL PER ECO-4804
SECTION A-A
SCALE 2X1
Q3
Q1
Q2
Q4
HEX NUT
LOCK WASHER
FLAT WASHER
INSULATOR
SHOULDER WASHER
SCREW
PART OF MTG. KIT(TYP) ITEM 65
APPLY HEAT SINK COMPOUND ITEM 62 AS SHOWN
EX
OUT
IN
YELLOW
BLUE
RED
GREEN
YELLOW
ORN
BLUE
RED
ORN
GREEN
J20
J50
J70, J40
J60
CURRENT REV. TO BE STAMPED AT ASSEMBLY
J30
J62, J63
J90
J31
J64
U1, U2
J25
SECTION B-B
SCALE 2X1
REF Q8-Q12
INSERT POLARIZING KEY INTO CONNECTOR NEAR PIN NO. 1, INDICATED WITH ARROW, BREAK-OFF TAB OF POLARIZING KEY AS SHOWN. TYP, 4 PLACES
NOTES:
1. ALL SEMICONDUCTOR DEVICES ARE TO BE VERIFIED PER HAEMONETICS GCP-E122. (PARAGRAPH 5.2, THERMAL SHOCK, IS OPTIONAL).
2. THE IC PART DESCRIPTIONS DESIGNATE BURNED-IN AND TESTED PART. THESE DEVICES NEED NOT BE VERIFIED PER HAEMONETICS GCP-E122 UNLESS THE BURNED-IN AND TESTED PARTS ARE UNAVAILABLE, (PARAGRAPH 5.2, THERMAL SHOCK, IS OPTIONAL.
DASH No. MAKE FROM PROCESS/DESCRIPTION NHA USED ON
MULTI-PROCESS CHART
THIS DOCUMENT CONTAINS INFORMATION WHICH IS PROPRIETARY TO HAEMONETICS CORPORATION, AND ITS DISTRIBUTION IS LIMITED TO FURTHERING THE BUSINESS INTERESTS OF HAEMONETICS CORPORATION
UNLESS OTHERWISE SPECIFIED
TOLERANCES
ANGULAR ± ½°
TWO PLACE DECIMAL ± .01
THREE PLACE DECIMAL ± .005
FINISHED SURFACES 125 RMS
BREAK SHARP CORNERS
MATERIAL —
FINISH —
DRAWN
CHECKED
APPROVED
HAEMONETICS
HAEMONETICS CORPORATION
400 Wood Road, Braintree, Massachusetts 02184
PROCESSOR DRIVER PCB ASSY
D
16951-04
SCALE 1:1
SHEET 1 OF 2

REVISIONS						
ZONE	REV	DESCRIPTION	CHECKED	DATE	APPROVED	DATE
		SEE SHT 1 FOR REVISION	[illegible]	10-17-86		

REFERENCE DESIGNATION	ITEM NO.	QTY	PART NO.	DESCRIPTION	NOTES COMMENTS
Z1,Z2	3	2	A30002-803	IC, SPRAGUE, ULN2803AEU	2
Z3	4	1	A30007A-240	IC, TI, SN74LS240N3-01	2
U1,U2	5	2	A30003-524	IC, UNITRODE, UC3524A	1
U3	6	1	A30000-337	IC, REG, NAT., LM337H/A+	2
CR7-CR20	7	14	A40004-004	DIODE, 1N4004	1
CR1,CR2, CR4,CR5	8	4	A40004-148	DIODE, 1N4148	1
CR3,CR6	9	2	A40001-301	DIODE, UNITRODE, UES-1301	1
VR1,VR4	10	2	A40004-745	DIODE, ZENER, 1N4745A, 16V	1
VR2,VR5	11	2	A40004-752	DIODE, ZENER, 1N4752A, 33V	1
VR3	12	1	A40006-050	TRANZORB, GEN SEMI, 1N6050A	1
LED 1,2,3, 4	13	4	A11345-00	LED, DIALIGHT, 550-2206, GRN	
LED 5	14	1	A11348-00	LED, DIALIGHT, 555-4007	
Q5,Q6,Q7	15	3	A44002-907	TRANSISTOR, MOT, 2N2907A	1
Q1-Q4, Q8-Q12	16	9	A44000-521	TRANSISTOR, INT RECT, IRF521	1
C1,C7,C9, C11,C17, C20,C25	17	7	A17012-01	CAP, SP, CKR05BX104K, .1MFD	
C23,C24	18	2	A24146-015	CAP, SP, 199D156X0035EE2, 15MFD	
C21,C22, C26,C27, C28	19	5	A24146-001	CAP, SP, 199D105X9035AA1, 1MFD	
C2,C3, C12,C13	20	4	A17012-02	CAP, SP, CKR05BX473K, .047MFD	
C4,C14	21	2	A17012-03	CAP, SP, CKR06BX224K, .22MFD	
C5,C15	22	2	A17012-04	CAP, SP, CKR05BX103K, .01MFD	
C6,C16	23	2	A17012-05	CAP, SP, CKR05BX102K, .001MFD	
C8,C18	24	2	A17012-06	CAP, SP, CKR05BX272K, .0027MFD	

REFERENCE DESIGNATION	ITEM NO.	QTY	PART NO.	DESCRIPTION	NOTES COMMENTS
C10,C19	25	2	A24147-047	CAP, SP, 199D475X0035CA1, 4.7MFD	
R5,R7,R20, R22,R35	26	5	A33134-001	RES, 10K, 1/8W, 1%, RN55D1002F	
R33,R34	27	2	A33130-681	RES, 681 OHM, 1/8W, 1%, RN55D6810F	
R14,R29,	28	2	A33133-002	RES, 2K, 1/8W, 1%, RN55D2001F	
R13,R28, R38,R39, R43,R44	29	6	A33133-003	RES, 3K, 1/8W, 1%, RN55D1001F	
R2,R10, R17,R25, R41	30	5	A33131-499	RES, 4.99K, 1/8W, 1%, RN55D4991F	
R3,R18	31	2	A33132-499	RES, 49.9K, 1/8W, 1%, RN55D4992F	
R4,R19	32	2	A33131-392	RES, 3.92K, 1/8W, 1%, RN55D3921F	
R6,R21	33	2	A33133-140	RES, 140K, 1/8W, 1%, RN55D1403F	
R8,R23	34	2	A33134-475	RES, 4.75K, 1/8W, 1%, RN55D4754F	
R9,R24	35	2	A33132-475	RES, 47.5K, 1/8W, 1%, RN55D4752F	
R11,R26, R40	36	3	A33134-002	RES, 20K, 1/8W, 1%, RN55D2002F	
R12,R27	37	2	A33132-301	RES, 30.1K, 1/8W, 1%, RN55D3012F	
R31	38	1	A33130-121	RES, 121 OHM, 1/8W, 1%, RN55D1210F	
R32	39	1	A33130-215	RES, 215 OHM, 1/8W, 1%, RN55D2150F	
R42	40	1	A33130-150	RES, 150 OHM, 1/8W, 1%, RN55D1500F	
R45,R46	41	2	A33130-100	RES, 100 OHM, 1/8W, 1%, RN55D1000F	
R15,R30, R37	42	3	A16980-00	RES, DALE, RW79, .2 OHM 3W, 1%	

REFERENCE DESIGNATION	ITEM NO.	QTY	PART NO.	DESCRIPTION	NOTES COMMENTS
R1,R16	43	2	A16981-00	RES, POT, BOURNS, 3299P-1-103, 10K	
RN3	44	1	A11442-00	RES, NTWK, BOURNS, 4310R-101-103	
RN6,RN7	45	2	A15542-03	RES, NTWK, BOURNS, 4310R-102-473	
RN8,RN9	46	2	A16982-00	RES, NTWK, BOURNS, 4308R-102-473	
RN4	47	1	A14680-37	RES, NTWK, BOURNS, 4306R-101-273	
RN5	48	1	A14680-32	RES, NTWK, BOURNS, 4306R-101-103	
RN1,RN2	49	2	A16984-00	RES, NTWK, BECKMAN, 694-3-R10KA	
R36	50	1	A33252-022	RES, 2.2K, 1/4W, 5%, COMP	
K1	61	1	A11364-00	RELAY, AROMAT, WC4ED-JP 24 VDC	
TP3	67	1	A13553-02	HEADER, ST, S/ROW, BERG, 65507-108	
TP1,TP2	68	2	A13553-01	HEADER, ST, S/ROW, BERG, 65507-106	
TP4	69	1	A10639-00	TERMINAL, KEYSTONE, 1502-2	

DASH No.	MAKE FROM	PROCESS/DESCRIPTION	NHA	USED ON
			DASH-2	

MULTI-PROCESS CHART

THIS DOCUMENT CONTAINS INFORMATION WHICH IS PROPRIETARY TO HAEMONETICS CORPORATION, AND ITS DISTRIBUTION IS LIMITED TO EVERYTHING THE BUSINESS INTERESTS OF HAEMONETICS CORPORATION

UNLESS OTHERWISE SPECIFIED
TOLERANCES
ANGULAR ± ½°
TWO PLACE DECIMAL ± .01
THREE PLACE DECIMAL ± .005
FINISHED SURFACES 125 RMS
BREAK SHARP CORNERS ⅛ max
MATERIAL: —
FINISH: —
DRAWN CLEARING DATE 8-1-86
CHECKED [illegible] DATE 10-17-86
APPROVED [illegible] DATE 12-4-86

HAEMONETICS

HAEMONETICS CORPORATION
400 Wood Road, Braintree, Massachusetts 02184

PROCESSOR DRIVER PCB ASSY

D | 16951-04 | REV —

SCALE — | SHEET 2 OF 2

HAEMONETICS

400 Wood Road, Braintree, Massachusetts 02184

BILL OF MATERIALS

SEQ NO	QTY	SZ	ITEM	DESCRIPTION	BOM	REFERENCE DESIGNATION
0001	0.000	D	16952-00	SCHEMATIC, PROCESSOR DRIVER PCB		
2	1.000	D	16953-00	PROCESSOR DRIVER PCB DRILLING		
3	2.000	A	30002-803	IC DRIVER SPRAGUE ULN2803ABU		Z1, Z2
4	1.000	A	30074-240	IC TI SN74LS240N3-01		Z3
5	2.000	A	30003-524	IC UNITRODE UC3524A		U1, U2
6	1.000	A	30000-337	IC REG NAT LM337H/A+		U3
7	14.000	A	40004-004	DIODE 1N4004		CR7-CR20
8	4.000	A	40004-148	DIODE 1N4148		CR1, 2, 4, 5
9	2.000	A	40001-301	DIODE UNITRODE UES-1301		CR3, CR6
10	2.000	A	40004-745	DIODE ZENER 1N4745A 16V		VR1, VR4
11	2.000	A	40004-752	DIODE ZENER 1N4752A 33V		VR2, VR5
12	1.000	A	40006-050	TRANZORB GEN SEMI 1N6050A		VR3
13	4.000	A	11345-00	LED DIALIGHT 550-2206 GRN		LED1, 2, 3, 4
14	1.000	A	11348-00	LED DIALIGHT 555-4007		LED5
15	3.000	A	44002-907	TRANSISTOR MOT 2N2907A		Q5-Q7
16	9.000	A	44000-521	TRANSISTOR INT RECT IRF521		Q1-Q4, Q8-Q12
17	5.000	A	17012-01	CAP SP CKR05BX104K .1MFD		C7, 9, 17, 20, 25
18	2.000	A	24146-015	CAP SP 199D156X0035EE2 15MFD		C23, C24
19	5.000	A	24146-001	CAP SP 199D105X9035AAL 1MFD		C21, 22, 26, 27, 28
20	4.000	A	17012-02	CAP SP CKR05BX473K .047MFD		C2, 3, 12, 13
21	2.000	A	17012-03	CAP SP CKR06BX224K .22MFD		C4, C14
22	4.000	A	17012-04	CAP SP CKR05BX103K .01MFD		C5, C15, C1, C11
0023	2.000	A	17012-05	CAP SP CKR05BX102K .001MFD		C6, C16

SYM	RELEASE	SYM	REVISION	PROD. IDENT.	NHA
	PER ECO No. 4869	A	PER ECO No. 5174	CS-4	D 14623-00

DWN	M DIDUCA	9/9/86	Lloyd	12/22/87	DESCRIPTION PROCESSOR DRIVER PCB ASSY
CHKR	F.E. EARLE	10/17/86	R. Silva	1/4/88	
ENTR	N. HENCK	10/21/86	N.W. Henck	1/4/88	SHEET 1 OF 4
VRFY	R. CUSHING	10/21/86		/ /	
APPL	WAYLETT	10/9/86	R Silva	1/4/88	BOM D 16951-04 REV A

HAEMONETICS

400 Wood Road, Braintree, Massachusetts 02184

BILL OF MATERIALS

SEQ NO	QTY	SZ	ITEM	DESCRIPTION	BOM	REFERENCE DESIGNATION
0024	2.000	A	17012-06	CAP SP CKR05BX272K .0027MFD		C8, C18
25	2.000	A	24147-047	CAP SP 199D475X0035CA1 4.7MFD		C10, C19
26	5.000	A	33134-001	RES 1.0K 1/8W 1% RN55D1002F		R5, 7, 20, 22, 35
27	2.000	A	33130-681	RES 681 OHM 1/8W 1% RN55D6810F		R33, R34
28	2.000	A	33133-002	RES 2K 1/8W 1% RN55D2001F		R14, 29
29	6.000	A	33133-001	RES 1K 1/8W 1% RN55D1001F		R13, 28, 38, 39, 43, 44
30	5.000	A	33131-499	RES 4.99K 1/8W 1% RN55D4991F		R2, 10, 17, 25, 41
31	2.000	A	33132-499	RES 49.9K 1/8W 1% RN55D4992F		R3, R18
32	2.000	A	33131-392	RES 3.92K 1/8W 1% RN55D3921F		R4, R19
33	2.000	A	33133-140	RES 140K 1/8W 1% RN55D1403F		R6, R21
34	2.000	A	33134-475	RES 4.75M 1/8W 1% RN55D4754F		R8, R23
35	2.000	A	33132-475	RES 47.5K 1/8W 1% RN55D4752F		R9, R24
36	3.000	A	33134-002	RES 2.0K 1/8W 1% RN55D2002F		R11, R26, R40
37	2.000	A	33132-301	RES 3.01K 1/8W 1% RN55D3012F		R12, R27
38	1.000	A	33130-121	RES 121 OHM 1/8W 1% RN55D1210F		R31
39	1.000	A	33130-215	RES 215 OHM 1/8W 1% RN55D2150F		R32
40	1.000	A	33130-150	RES 150 OHM 1/8W 1% RN55D1500F		R42
41	2.000	A	33130-100	RES 100 OHM 1/8W 1% RN55D1000F		R45, R46
42	3.000	A	16980-00	RES DALE RW79 .20HM 3W 1%		R15, R30, R37
43	2.000	A	16981-00	RES POT BOURNS 3299P-1-103 10K		R1, R16
44	1.000	A	11442-00	RES NTWK BOURNS 4310R-101-103		RN3
45	2.000	A	15542-03	RES NTWK BOURNS 4310R-102-473		RN6, RN7
46	2.000	A	16982-00	RES NTWK BOURNS 4308R-102-473		RN8, RN9
47	1.000	A	14680-37	RES NTWK BOURNS 4306R-101-273		RN4
48	1.000	A	14680-32	RES NTWK BOURNS 4306R-101-103		RN5
49	2.000	A	16984-00	RES NTWK BECKMAN 694-3-R10KA		RN1, RN2
0050	1.000	A	33252-022	RES 2.2K 1/4W 5% COMP		R36

SHEET 2 OF 4

BOM D 16951-04 REV A

HAEMONETICS
400 Wood Road, Braintree, Massachusetts 02184

BILL OF MATERIALS

SEQ NO	QTY	SZ	ITEM	DESCRIPTION	BOM	REFERENCE DESIGNATION
0051	2.000	A	11374-00	CONN PIN HEADER AMP 207119-4		J40, J70
52	1.000	A	11375-00	CONN SOC HEADER AMP 207609-3		J50
53	1.000	A	13139-00	CONN SOC HEADER AMP 207526-4		J64
54	1.000	A	11376-00	CONN PIN HEADER AMP 207441-4		J60
55	1.000	A	11373-00	CONN PIN HEADER AMP 207120-4		J20
56	2.000	A	13148-00	CONN PIN HEADER AMP 207365-3		J62, J63
57	1.000	A	13137-00	CONN ST HD 4WALL 3M 3446-6303		J25
58	1.000	A	13135-00	CONN ST HD 4WALL 3M 3314-6303		J90
59	1.000	A	13136-00	CONN R/A HD 3WALL 3M 3428-1303		J31
60	1.000	A	11356-00	CONN R/A HD 3WALL 3M 3431-1303		J30
61	1.000	A	11364-00	RELAY AROMAT NC4ED-JP 24VDC		K1
62	0.001	A	10351-00	HEATSINK COMPOUND		
63	4.000	A	14625-00	KEY POLARIZING 3M 3518		J30, J31, J25, J90 REF
64	2.000	B	16987-00	HEATSINK AAVID 60130-010P		Q1-Q3, Q2-Q4 REF
65	2.000	A	16985-00	MTG KIT TRANS THERMALLOY 4880		Q1-Q3, Q2-Q4 REF
66	1.000		16986-00	HEATSINK AAVID 3257R		U3 REF
67	1.000	A	13553-02	HEADER ST S/ROW BERG 65507-108		TP3
68	2.000	A	13553-01	HEADER ST S/ROW BERG 65507 106		TP1, TP2
69	1.000	A	10639-00	TERMINAL KEYSTONE 1502-2		TP4
70	5.000	A	13131-00	SOLENOID VALVE		
71	1.000	A	13132-00	PNEUMATIC BUS BAR		
72	1.000	B	13231-00	SPACER SOLENOID		
73	5.000	A	13141-00	PORT PLUG		
74	1.070	A	13124-05	URETHANE HOSE 5/64 ID ORANGE		
75						
76						
0077	2.000	A	11560-03	SOCKET AUGAT #516-AG11D 16DIP		U1, U2 REF

SHEET 3 OF 4

BOM D 16951-04 REV A

HAEMONETICS
400 Wood Road, Braintree, Massachusetts 02184

BILL OF MATERIALS

SEQ NO	QTY	SZ	ITEM	DESCRIPTION	BOM	REFERENCE DESIGNATION
0078	7.000	A	60110-506	SCR PAN HD SS #4-40 X .38LG		
79	12.000	A	56121-005	WASHER PLAIN REG SS #4		
80	12.000	A	56321-005	WASHER INT T LK REG SS #4		
81	10.000	A	31110-005	NUT HEX REG SS #4-40		
82	5.000	A	60110-516	SCR PAN HD SS #4-40 X 1.0LG		
83	.		–			
84	.		–			
85	.		–			
86	.104	A	10418-03	BUSS WIRE SOLID TINNED 22 AWG		JUMPER
	.		–			
	.		–			
	.		–			
	.		–			
	.		–			
	.		–			
	.		–			
	.		–			
	.		–			
	.		–			
	.		–			
	.		–			
	.		–			
	.		–			
	.		–			
	.		–			
	.		–			
	.		–			
	.		–			

SHEET 4 OF 4

BOM D 16951-04 REV A

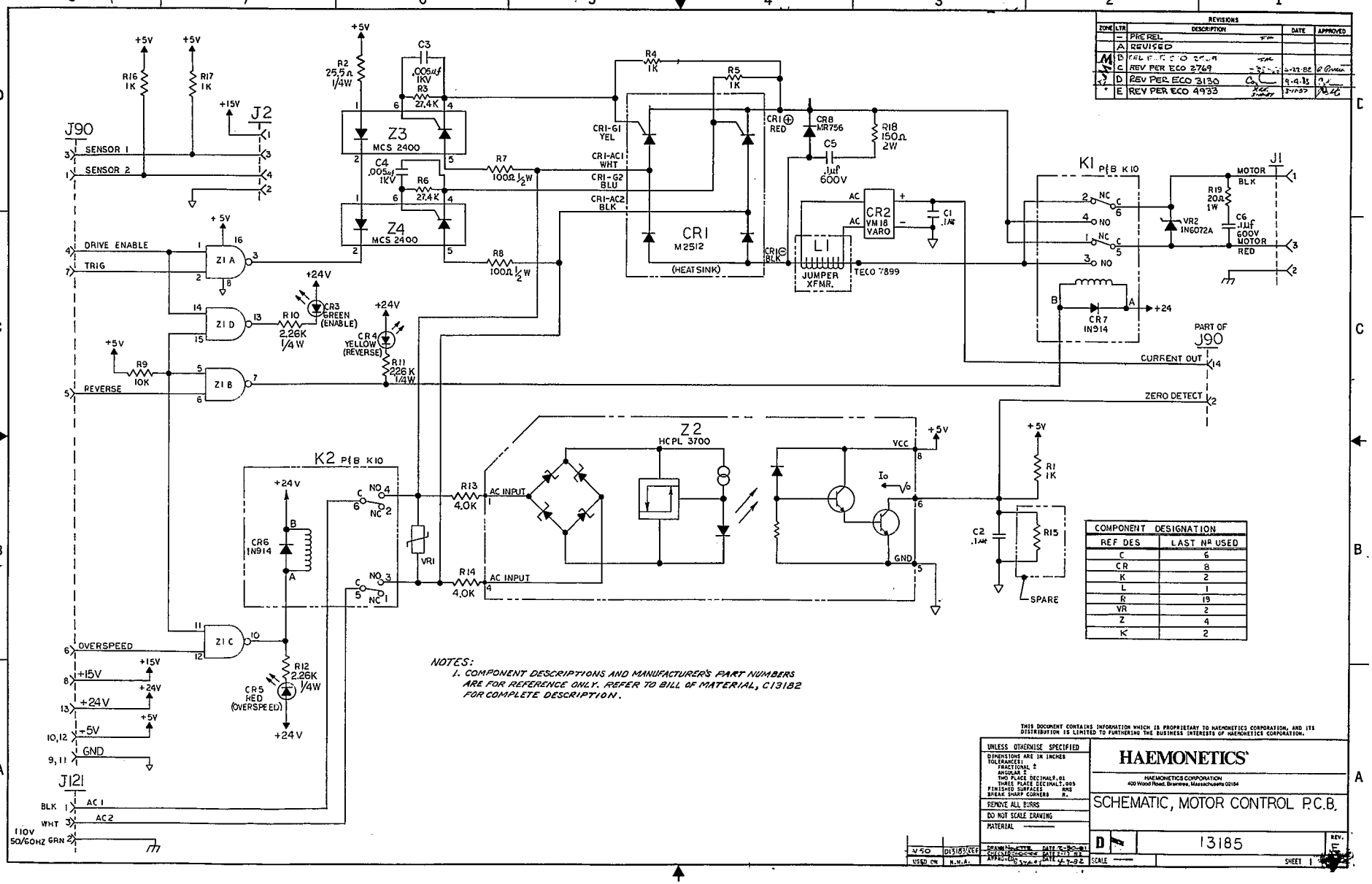

REVISIONS				
ZONE	LTR	DESCRIPTION	DATE	APPROVED
	–	PRE REL		
	A	REVISED		
M	B	REL [illegible]		
	C	REV PER ECO 2769	4-22-82	[illegible]
	D	REV PER ECO 3130	9-4-83	[illegible]
	E	REV PER ECO 4933	3-11-87	[illegible]

COMPONENT DESIGNATION	
REF DES	LAST Nº USED
C	6
CR	8
K	2
L	1
R	19
VR	2
Z	4
K	2

NOTES:
1. COMPONENT DESCRIPTIONS AND MANUFACTURER'S PART NUMBERS ARE FOR REFERENCE ONLY. REFER TO BILL OF MATERIAL, C13182 FOR COMPLETE DESCRIPTION.

THIS DOCUMENT CONTAINS INFORMATION WHICH IS PROPRIETARY TO HAEMONETICS CORPORATION, AND ITS DISTRIBUTION IS LIMITED TO FURTHERING THE BUSINESS INTERESTS OF HAEMONETICS CORPORATION.

UNLESS OTHERWISE SPECIFIED
DIMENSIONS ARE IN INCHES
TOLERANCES:
FRACTIONAL ±
ANGULAR ±
TWO PLACE DECIMAL ±.01
THREE PLACE DECIMAL ±.005
FINISHED SURFACES RMS
BREAK SHARP CORNERS R.
REMOVE ALL BURRS
DO NOT SCALE DRAWING
MATERIAL

HAEMONETICS®
HAEMONETICS CORPORATION
400 Wood Road, Braintree, Massachusetts 02184

SCHEMATIC, MOTOR CONTROL P.C.B.

D 13185 REV. E
SCALE — SHEET 1

ZONE	LTR	DESCRIPTION	DATE	APPROVED
	G	REV PER ECO-4852	12/23/86	
	H	REV PER ECO 4933		
	J	REV PER ECO 4766	4-28-87	
		REV PER ECO 2769 CODOSE 6-21-82	6-22-82	
	E	REV PER ECO 2847 CALOSE 9-16-82	9-27-87	
	F	REV PER ECO-3130	9-7-87	

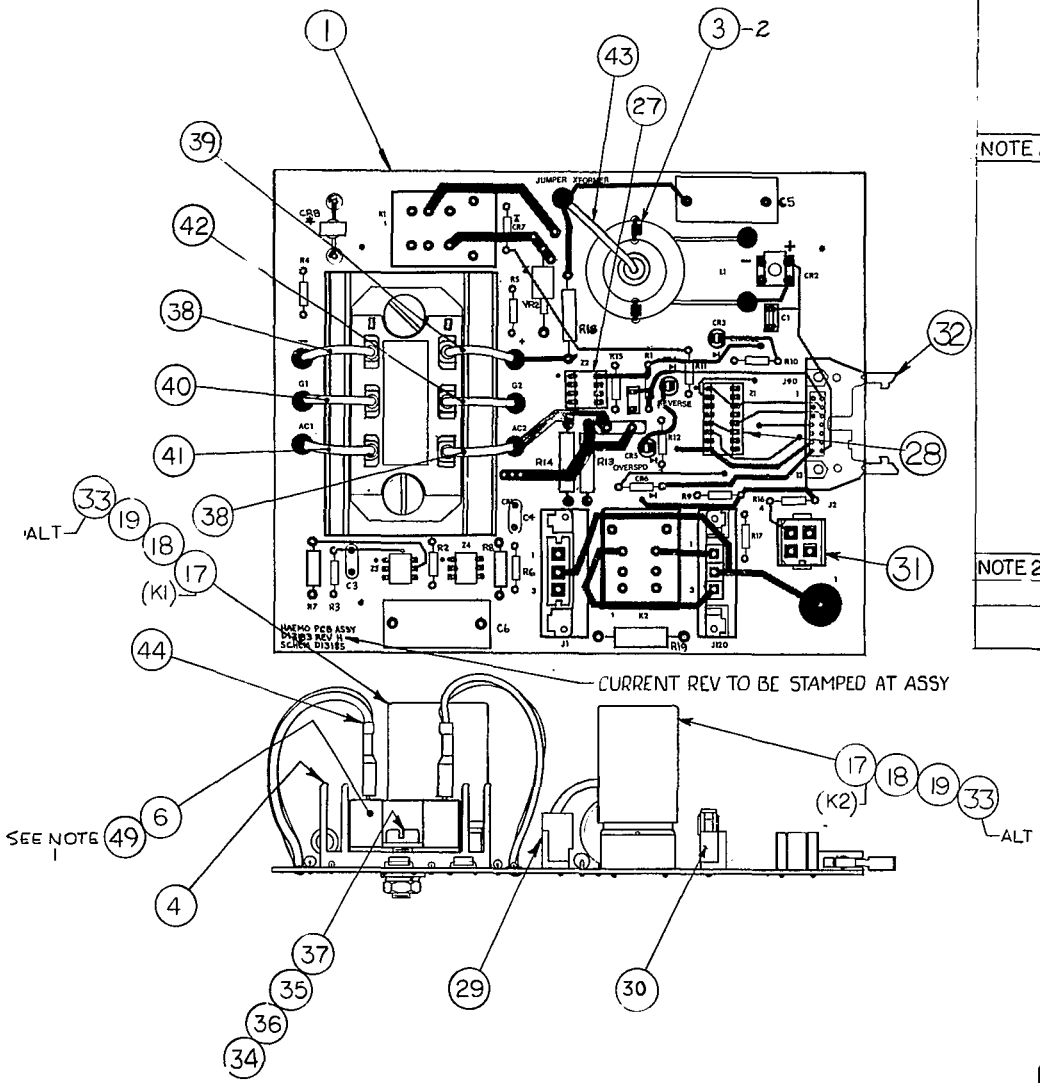

REFERENCE DESIGNATION CHART

NOTES	REF DES	ITEM №	QTY	DESCRIPTION	PART NO.
	L1	5	1	CURRENT XFORMER, TECO*7899	A13200
	CR1	6	1	SCR. BRIDGE, SILICONE POWER CUBE	A13201
	CR2	8	1	BRIDGE, VARO VM18	A30000-018
	CR3	10	1	DIODE, LED (GREEN)	A11340
	CR4	9	1	DIODE, LED HP, 5082-4597 YEL	A11297
	CR5	11	1	DIODE, LED HP, 5082-4790 RED	A11320
NOTE 2	CR6, CR7	12	2	DIODE, 1N914	A40000-914
	VR1	7	1	VARISTOR, GE *V250LA40A	A13202
	C1, C2	13	2	CAP MON CERAMIC .1µf 50V 20%	A27155-001
	Z1	14	1	IC, QUAD NAND DRIVER, SP UDN-5707A BW	A30005-707
	Z2	15	1	IC INT OPTO COUPLER, HP HCPL-3700	A30003-700
	Z3, Z4	16	2	IC PHOTO SCR OPTO ISOL*MCS2400	A30002-400
	R2	21	1	RES, 25Ω RN60D	A33230-025
	R3, R6	22	2	RES, 27K, RN55D	A33133-027
	R9	20	1	RES, 10K, RN55D	A33134-001
	R4, R5, R1, R16, R17,	23	5	RES, 1K, RN55D	A33133-001
	R7, R8	24	2	RES, 100Ω, RN60D	A33331-010
	R10, R11, R12	25	3	RES, 2.26K, 1/8 W 1%	A33131-226
	R13, R14	26	2	RES. WIREWOUND 4.0K	A13412
	R18	47	1	RES, 150Ω, 2W, 5% TRW BWH-150-5%	A33551-015
	C3, C4	45	2	CAP, CERAMIC, .005µf, 1KV, 20% DISC	A21253-005
	C5, C6	46	2	CAP, ORANGE DROP, .1µf, 600VDC, 10%	A23145-001
NOTE 2	CR8	48	1	DIODE MOTOROLA MR756	A40000-756
	K1, K2	17	2	RELAY, POTTER & BRUM. KID P	A13203
	R19	51	1	RES, 20Ω, 1W, 5%, CARBON COMP	A33451-002
	VR2	50	1	DIODE, TRANSORB GEN SEM 1N6072A	A40006-072

NOTES:

1. APPLY HEATSINK COMPOUND, ITEM 49, UNDER THE SCR BRIDGE SILICONE POWER CUBE, ITEM 6.
2. COMPONENTS TO BE TEST & QUALIFIED PER HAEMONETICS QCP-E122 PARAGRAPH 5.5., 5.8, 6.0.
3. CHANGES TO ITEMS 5, 12, 15, 16, AND 17 COULD AFFECT U.L. AND/OR C.S.A. LISTING OF THE PRODUCT IT IS USED IN.

THIS DOCUMENT CONTAINS INFORMATION WHICH IS PROPRIETARY TO HAEMONETICS CORPORATION, AND ITS DISTRIBUTION IS LIMITED TO FURTHERING THE BUSINESS INTERESTS OF HAEMONETICS CORPORATION.

UNLESS OTHERWISE SPECIFIED
DIMENSIONS ARE IN INCHES
TOLERANCES:
FRACTIONAL ±
ANGULAR ±
TWO PLACE DECIMAL ±.01
THREE PLACE DECIMAL ±.005
FINISHED SURFACES RMS
BREAK SHARP CORNERS R.
REMOVE ALL BURRS
DO NOT SCALE DRAWING
MATERIAL

DRAWN C.A.B. Shea DATE 1-12-87
CHECKED DATE
APPROVED DATE 9/21/87

HAEMONETICS®

HAEMONETICS CORPORATION
400 Wood Road, Braintree, Massachusetts 02184

CENTRIFUGE MOTOR CONTROL PCB ASSY

C | 13183 | REV. 1

SCALE FULL | SHEET 1 OF 1

V50 | D13087
USED ON | N.H.A.

8-37

Miller Blueprint Co

8-38

BILL OF MATERIALS	HAEMONETICS CORP. 400 WOOD ROAD, BRAINTREE	PROD. IDENT.	BOM C 13183	REV. K	SHEET 1 OF 3
TITLE: CENTRIFUGE MOTOR CONTROL PCB ASSEMBLY		DRWN BY: DATE: MDD/VDG	CHECKED: CADOSE	DATE: 3-26-82	
			APPROVED: [illegible]	DATE: 7/26/82	

ITEM	QUANTITY G4	G3	G2	G1	PART NO./DWG NO.	DESCRIPTION	BOM	REFERENCE DESIGNATION
1				1	C 13184	Centrifuge Motor Control PCB Drilling		
2				REF	D 13185	Centrifuge Motor Control PCB Schematic		
3				2	A 10417-01	Tie Wraps, Nylon 5" Lg.		
4				1	A 13197	Heatsink, Rework	X	
5				1	A 13200	Current Transformer, TECO #7899		L1 (NOTE 3)
6				1	A 13201	SCR Bridge Silicone Power Cube #M2512		CR1
7				1	A 13202	Varistor, GE #V250LA40A		VR1
8				1	A 30000-018	Bridge, VARO VM18		CR2
9				1	A 11297	Diode, LED HP #5082-4597 (YEL)		CR4
10				1	A 11340	Diode, LED (GREEN)		CR3
11				1	A 11320	Diode, LED HP #5082-4790 (RED)		CR5
12				2	A 40000-914	Diode, IN914		CR6-CR7 (NOTE 3)
13				2	A 27155-001	Cap, Mon Ceramic, SPRAGUE 2CZ5U104X0050C4		C1,C2
14				1	A 30005-707	IC, Quad Nand Driver SP #UDN-5707ABU		Z1
15				1	A 30003-700	IC, Int Opto Coupler HP #HCPL-3700		Z2 (NOTE 3)
16				2	A 30002-400	IC, Photo Scr Opto Isolator ISOCOM #MCS2400		Z3,Z4 (NOTE 3)
17				2	A 13203	Relay, Potter & Brum #K10 P 11D15-24		K1-K2 (NOTE 3)
18				2	A 13204	Socket, Potter & Brum #27E489		
19				2	A 13205	Clip, Potter & Brum #20C217		

LTR	REVISION	APP'D	DATE	LTR	REVISION	APP'D	DATE
K	REVISED PER ECO 5371	[illegible]	1-27-88	N	REV PER ECO 2769 CADOSE 6-21-82	R Powers	6-22-82
H	REL PER ECO 4933 EARLE 3-10-87	[illegible]	3-11-87	E	REV PER ECO 2847 CADOSE 9-16-82	[illegible]	9-22-82
M	REV PER ECO 4766 CADOSE 3-26-86	R Powers	4-28-87	F	Rev. per ECO 3130	[illegible]	9-7-83
				G	REV ECO-4852 FEE 12-16-86	[illegible]	12/22/86

V50	D13082		
USED ON	N.H.A.	USED ON	N.H.A.

TITLE: CENTRIFUGE MOTOR CONTROL PCB ASSEMBLY

BOM C 13183 REV. K

BOM C 13133	TITLE CENTRIFUGE MTR CONTROL PCB ASS'Y	HAEMONETICS CORP. 400 WOOD ROAD, BRAINTREE	REV. K	SHEET 2 OF 3

ITEM	QUANTITY G4	G3	G2	G1	PART NO./DWG NO.	DESCRIPTION	BOM	REFERENCE DESIGNATION
20				3	A 33134-001	Resistor, 10K 1/8W 1%		R3, R6, R9
21				1	A 33230-025	Resistor, 25.5 1/4W 1%		R2
~~22~~				~~2~~	~~A 33133-027~~	~~Resistor, 27.4K 1/8W 1%~~		~~R3,R6~~
23				5	A 33133-001	Resistor, 1K 1/8W 1%		R4,R5,R1,R16,R17
24				2	A 33331-010	Resistor, 100Ω 1/2W 1%		R7,R8
25				3	A 33131-226	Resistor, 2.26K 1/8W 1%		R10,R12,R11
26				2	A 13412-[illegible]	Resistor, WIREWOUND 4.0K		R13,R14
27				1	A 11560-01	Socket, Augat #508-AG11D		Z2
28				1	A 11560-03	Socket, Augat #516-AG11D		Z1
29				1	A 13148-01	Conn, Pin Header, AMP #207365-3		J1
30				1	A 11375-01	Conn, Socket Header, AMP #207609-3		J12
31				1	A 11374-01	Conn, Pin Header, AMP #207119-4		J2
32				1	A 13206	Conn, 3M Header, #3314-1303		J90
33				2	A 13313-[illegible]	Relay, P&B # KUN11D15-24 (ALT FOR ITEM 17)		K1-K2
34				2	A 31110-014	Nut, Hex, S.Stl. #10-32 [illegible]		
35				4	A 56111-009	Washer, Plain, Narrow, SS, #10		
36				2	A 56211-009	Washer, Split Lock, Narrow, SS, #10		
37				2	A 60111-410	Scr, Mach, Sltd Pnh, SS, #10-32x5/8"Lg		[illegible]
38				2	A 9489-00	Wire, 16 GA x 4.5 Lg (Black)		CR1- - CR1-AC2
39				1	A 9489-22	Wire, 16 GA x 4.5 Lg (Red)		CR1- +
40				1	A 9489-44	Wire, 16 GA x 4.5 Lg (Yellow)		CR1-G1
41				1	A 9489-99	Wire, 16 GA x 4.5 Lg (White)		CR1-AC1
42				1	A 9489-66	Wire, 16 GA x 4.5 Lg (Blue)		CR1-G2
43				1	A 9489-00	Wire, 16 GA x 4.0 Lg (Black)		L1-JUMPER
44				6	A 11643-04	Terminal, Insulated Quickslide		
45				2	A 21253-005	Cap, Ceramic, SPRAGUE, 5GA-D50		C3, C4
46				2	A 23145-001	Cap, Drop, SPRAGUE, 6PS-P (Orange)		C5, C6
47				1	A 33551-015	Resistor, 150Ω, 2W, 5%, TRW BWH-150-5%		R18

BOM C 13183	TITLE CENTRIFUGE MTR CONTROL PCB ASSY	HAEMONETICS CORP. 400 WOOD ROAD, BRAINTREE	REV. K	SHEET 3 OF 3

ITEM	QUANTITY G4	G3	G2	G1	PART NO./DWG NO.	DESCRIPTION	BOM	REFERENCE DESIGNATION
48				1	A40000-756	DIODE, MR 756, MOTOROLA		CR8
49				.001	A 10351	HEATSINK COMP., WAKEFIELD P/N 120-2		
50				1	A40006-072	DIODE, TRANSORB GEN SEM 1N6072A		VR2
51				1	A33451-002	RES, 20 OHM, 1W, 5% CARBON COMP		R19

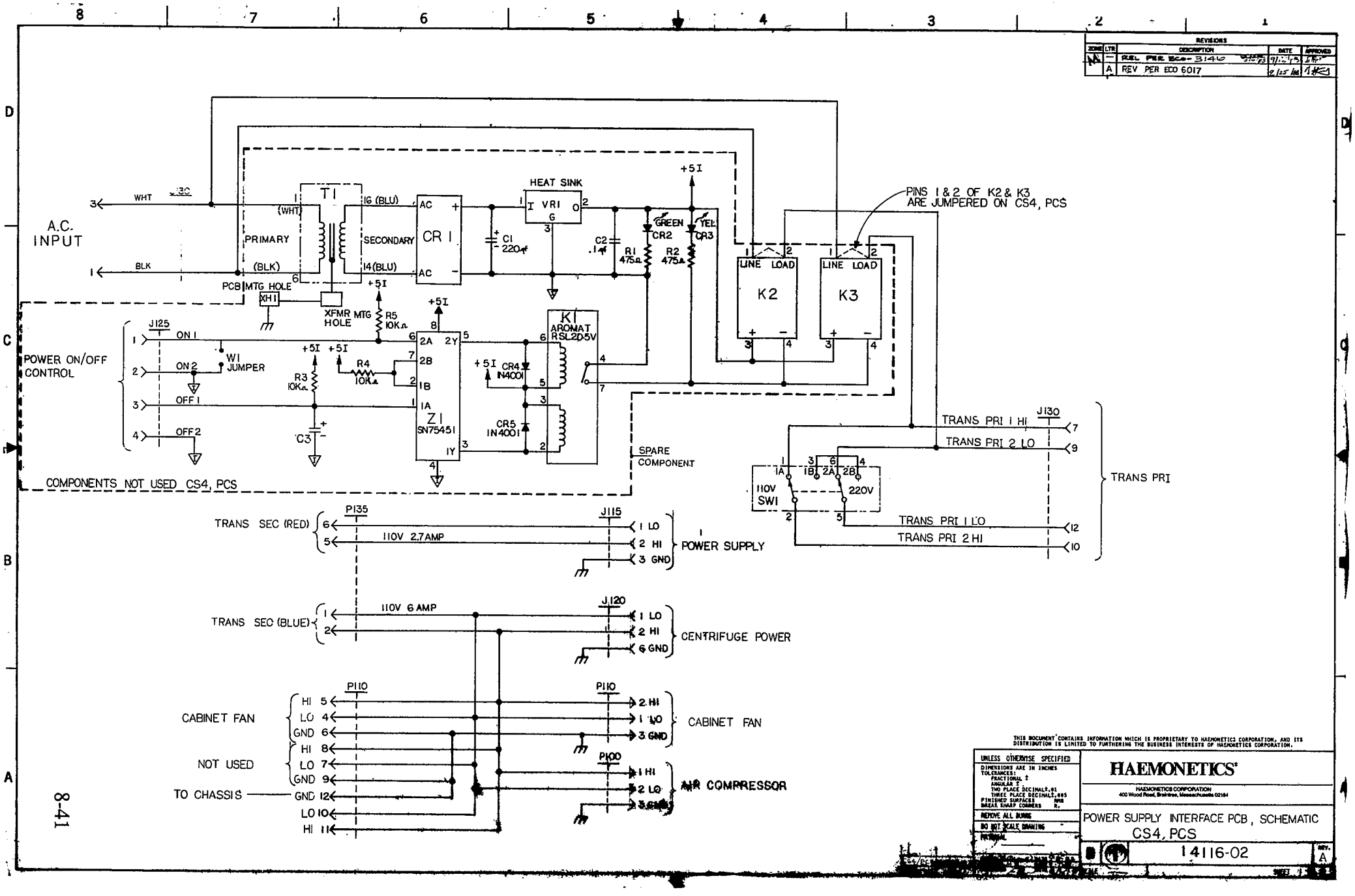
REVISIONS
ZONE LTR DESCRIPTION DATE APPROVED
A REV PER ECO 6017
A.C. INPUT
WHT
BLK
T1
PRIMARY
SECONDARY
(WHT)
(BLK)
16 (BLU)
14 (BLU)
PCB MTG HOLE
XH1
XFMR MTG HOLE
CR1
AC
C1 220µf
HEAT SINK
VR1
C2 .1µf
R1 475Ω
R2 475Ω
GREEN CR2
YEL CR3
+5I
PINS 1 & 2 OF K2 & K3 ARE JUMPERED ON CS4, PCS
LINE LOAD
K2
K3
POWER ON/OFF CONTROL
J125
ON 1
ON 2
OFF 1
OFF 2
W1 JUMPER
R3 10KΩ
R4 10KΩ
R5 10KΩ
C3
Z1 SN75451
2A 2Y 2B 1B 1A 1Y
CR4 IN4001
CR5 IN4001
K1 AROMAT RSL2D-5V
SPARE COMPONENT
COMPONENTS NOT USED CS4, PCS
J130
TRANS PRI 1 HI
TRANS PRI 2 LO
TRANS PRI 1 LO
TRANS PRI 2 HI
TRANS PRI
110V SW1
220V
TRANS SEC (RED)
P135
J115
110V 2.7AMP
1 LO
2 HI
3 GND
POWER SUPPLY
TRANS SEC (BLUE)
110V 6 AMP
J120
6 GND
CENTRIFUGE POWER
P110
CABINET FAN
HI
LO
GND
NOT USED
TO CHASSIS
P100
AIR COMPRESSOR
THIS DOCUMENT CONTAINS INFORMATION WHICH IS PROPRIETARY TO HAEMONETICS CORPORATION, AND ITS DISTRIBUTION IS LIMITED TO FURTHERING THE BUSINESS INTERESTS OF HAEMONETICS CORPORATION.
UNLESS OTHERWISE SPECIFIED
REMOVE ALL BURRS
DO NOT SCALE DRAWING
HAEMONETICS
HAEMONETICS CORPORATION
400 Wood Road, Braintree, Massachusetts 02184
POWER SUPPLY INTERFACE PCB, SCHEMATIC
CS4, PCS
14116-02
REV. A

ZONE	LTR	DESCRIPTION	DATE	APPROVED
	—	REL. PER ECO #3146 9/7/83		
	A	REV PER ECO-3542 CADOSE 8-7-84	8/8/84	
	B	REV PER ECO 3676 CADOSE 10-3-84	10-16-84	
	B/1	REV PER ECO 4605 CADOSE 3-5-86	2-4-86	

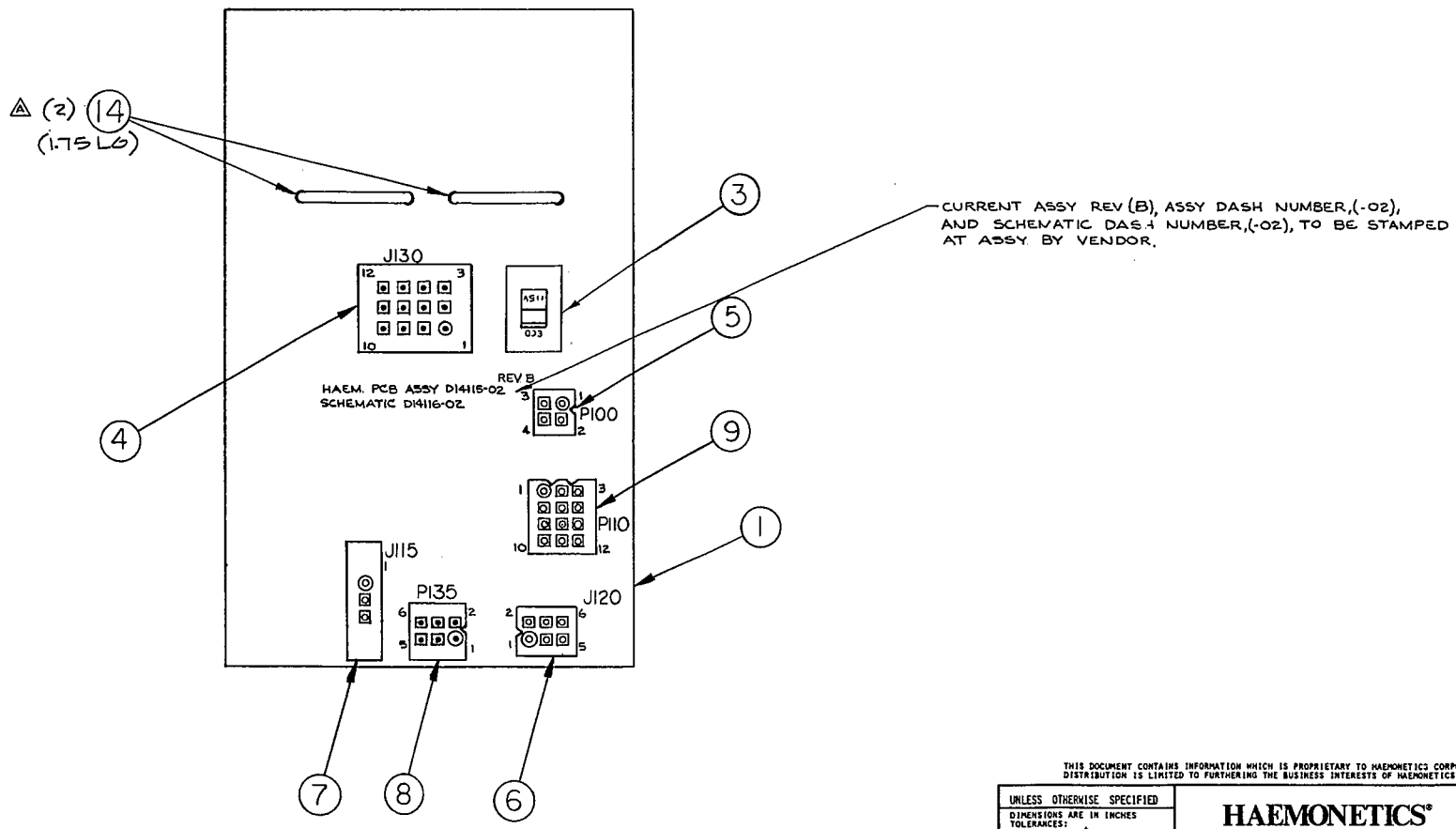

THIS DOCUMENT CONTAINS INFORMATION WHICH IS PROPRIETARY TO HAEMONETICS CORPORATION, AND ITS DISTRIBUTION IS LIMITED TO FURTHERING THE BUSINESS INTERESTS OF HAEMONETICS CORPORATION.

UNLESS OTHERWISE SPECIFIED
DIMENSIONS ARE IN INCHES
TOLERANCES:
FRACTIONAL ±
ANGULAR ±
TWO PLACE DECIMAL ±.01
THREE PLACE DECIMAL ±.005
FINISHED SURFACES RMS
BREAK SHARP CORNERS R.
REMOVE ALL BURRS
DO NOT SCALE DRAWING
MATERIAL SEE BOM
DRAWN DATE 8-30-83
CHECKED DATE 9-7-83
APPROVED DATE

HAEMONETICS®
HAEMONETICS CORPORATION
400 Wood Road, Braintree, Massachusetts 02184

POWER CONTROL PCB ASSY.

C 14115-02 REV. B

SCALE FULL SHEET 1 OF 1

CS4	D14422
PCS	E15106
USED ON	N.H.A.

Miller Blueprint Co

BILL OF MATERIALS	HAEMONETICS CORP. 400 WOOD ROAD, BRAINTREE	PROD. IDENT. CS 4, PCS	BOM C 14115-02	REV. B	SHEET 1 OF 1
TITLE: POWER CONTROL PCB ASSEMBLY		DRWN BY: MDD/vdg DATE: 9/83	CHECKED: [illegible]	DATE: 9/6/83	
			APPROVED: [illegible]	DATE: 9/[illegible]	

	ITEM	QUANTITY G4	G3	G2	G1	PART NO./DWG NO.	DESCRIPTION	BOM	REFERENCE DESIGNATION
	1				1	C 14117	POWER CONTROL, PCB, DRILLING		
A	2								
B	3				1	A 14512	SWITCH, U.I.D. #SE-1022-SD-CE-LP-R-HK-115/230		SW1
	4				1	A 13828-01	CONN, AMP #350433-1, (12 PIN HEADER)		J130
	5				1	A 13139-02	CONN, AMP #207496-4, (4 SOC HEADER)		P100
B	6				1	A 13139-03	CONN, AMP #207524-4, (6 SOC HEADER)		J120
	7				1	A 11375-01	CONN, AMP #207609-3, (3 SOC HEADER)		J115
	8				1	A 10041-02	CONN, AMP #207158-4, (6 PIN HEADER)		P135
	9				1	A 13139-04	CONN, AMP #207528-4, (12 SOC HEADER)		P110
A	10								
A	11								
A	12								
	13				REF	D 14116-02	POWER CONTROL, PCB, SCHEMATIC		
A	14				.29	A 9489-99	WIRE, UL, 16 AWG STRANDED, WHT (2PC 1.75)		

LTR	REVISION	APP'D	DATE	LTR	REVISION	APP'D	DATE
M	Rel per ECO #3146	[illegible]	9/[illegible]				
M	REV ECO 3542 CADOSE 8-7-84	[illegible]	8-8-84				
M	REV PER ECO 3676 CADOSE 10-2-84	[illegible]	10-16-84				
M	REV PER ECO 4605 CADOSE 3-5-86	[illegible]	3-6-86				

CS 4 PCS	D-14422 E-14335		
USED ON	N.H.A.	USED ON	N.H.A.
TITLE: POWER CONTROL PCB ASSY			
BOM C 14115		REV. B	

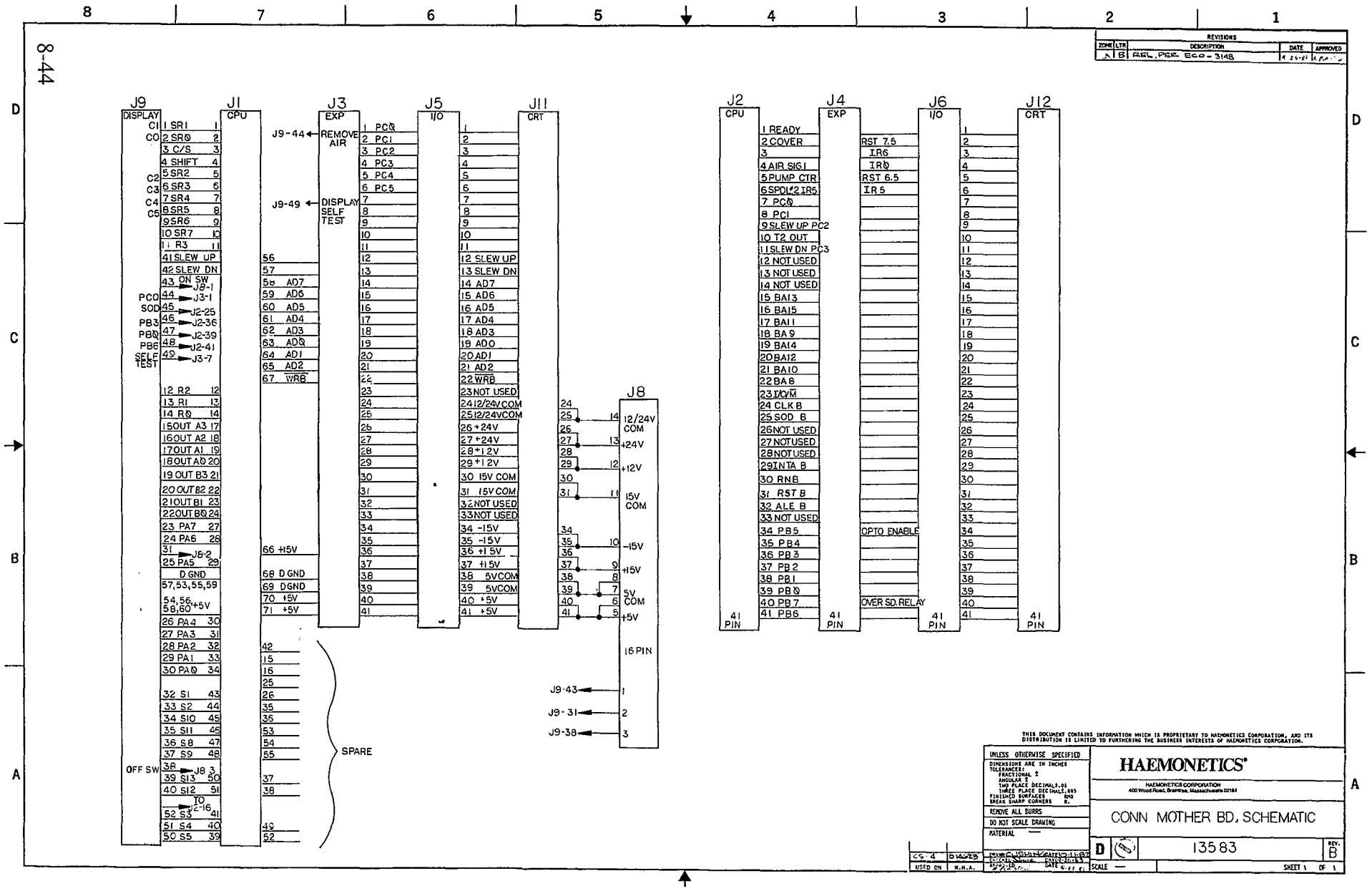
REVISIONS
ZONE LTR DESCRIPTION DATE APPROVED
A B REL. PER ECO-3148
J9 DISPLAY
J1 CPU
J3 EXP
J5 I/O
J11 CRT
J2 CPU
J4 EXP
J6 I/O
J12 CRT
J8
41 PIN
16 PIN
J9-44 REMOVE AIR
J9-49 DISPLAY SELF TEST
SPARE
OFF SW
TO J2-16
J9-43
J9-31
J9-38
12/24V COM
+24V
+12V
15V COM
-15V
+15V
5V COM
+5V
THIS DOCUMENT CONTAINS INFORMATION WHICH IS PROPRIETARY TO HAEMONETICS CORPORATION, AND ITS DISTRIBUTION IS LIMITED TO FURTHERING THE BUSINESS INTERESTS OF HAEMONETICS CORPORATION.
UNLESS OTHERWISE SPECIFIED
DIMENSIONS ARE IN INCHES
TOLERANCES:
FRACTIONAL ±
ANGULAR ±
TWO PLACE DECIMAL ±.01
THREE PLACE DECIMAL ±.005
FINISHED SURFACES RMS
BREAK SHARP CORNERS R.
REMOVE ALL BURRS
DO NOT SCALE DRAWING
MATERIAL —
HAEMONETICS
HAEMONETICS CORPORATION
400 Wood Road, Braintree, Massachusetts 02184
CONN MOTHER BD. SCHEMATIC
D
13583
REV. B
SCALE —
SHEET 1 OF 1
USED ON
N.H.A.

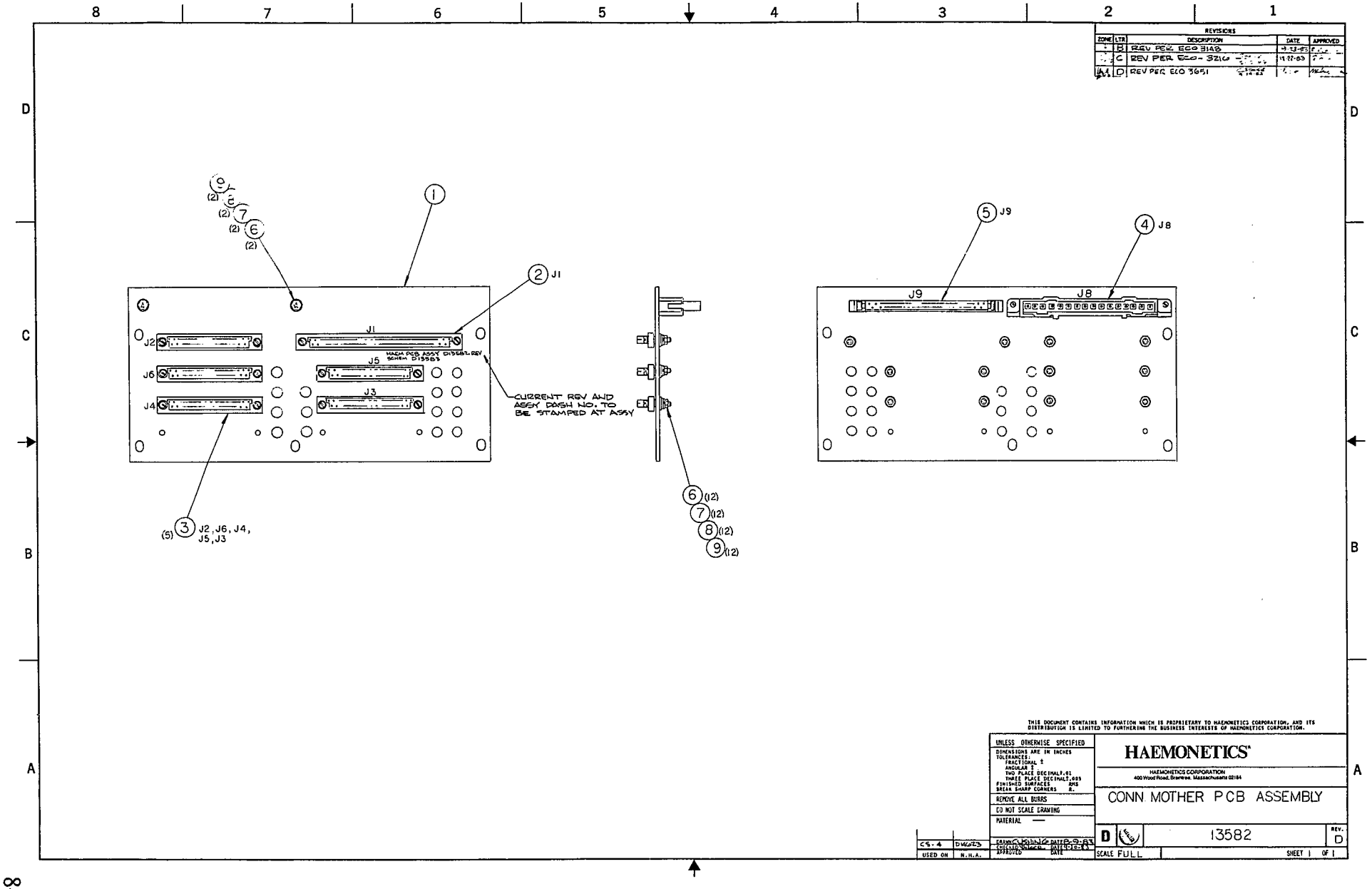
REVISIONS
ZONE LTR DESCRIPTION DATE APPROVED
B REV PER ECO 3148
C REV PER ECO-3216
D REV PER ECO 3651
J1
J2
J3
J4
J5
J6
J8
J9
HAEM PCB ASSY D13582 REV SCHEM D13583
CURRENT REV AND ASSY DASH NO. TO BE STAMPED AT ASSY
J2, J6, J4, J5, J3
THIS DOCUMENT CONTAINS INFORMATION WHICH IS PROPRIETARY TO HAEMONETICS CORPORATION, AND ITS DISTRIBUTION IS LIMITED TO FURTHERING THE BUSINESS INTERESTS OF HAEMONETICS CORPORATION.
UNLESS OTHERWISE SPECIFIED
DIMENSIONS ARE IN INCHES
TOLERANCES:
FRACTIONAL ±
ANGULAR ±
TWO PLACE DECIMAL ±.01
THREE PLACE DECIMAL ±.005
FINISHED SURFACES RMS
BREAK SHARP CORNERS R.
REMOVE ALL BURRS
DO NOT SCALE DRAWING
MATERIAL —
HAEMONETICS
HAEMONETICS CORPORATION
400 Wood Road, Braintree, Massachusetts 02184
CONN. MOTHER PCB ASSEMBLY
D
13582
REV. D
SCALE FULL
SHEET 1 OF 1
CS-4
USED ON
N.H.A.

8-46

BILL OF MATERIALS	HAEMONETICS CORP. 400 WOOD ROAD, BRAINTREE	PROD. IDENT. CS 4	BOM D 13582	REV. D	SHEET 1 OF 1
TITLE: CONN, MOTHER PCB ASS'Y.		DRWN BY: bc/vdg DATE: 8/83	CHECKED:	DATE: 9-20-83	
			APPROVED: R. Plantel	DATE: 9-23-83	

ITEM	QUANTITY G4	G3	G2	G1	PART NO./DWG NO.	DESCRIPTION	BOM	REFERENCE DESIGNATION
Ref				Ref	D 13583	CONN, MOTHER PCB, SCHEMATIC		
1				1	D 13584	CONN, MOTHER PCB, DRILLING		
2				1	A 11293	RECEPTACLE, 71 PIN, AMP #202932-5		J1
3				5	A 11295	RECEPTACLE, 41 PIN, AMP #202932-6		J2-J6
4				1	A 14511-06	CONN, PIN HEADER, 16 PIN, AMP #207599-3		J8
5				1	A 13710	CONN, 3M #3372-2303		J9
6				14	A 60110-508	SCR, MACH, SLT PAN HD, SS, #4-40x.50 LG		
7				14	A 56155-005	WASHER, PLAIN RGLR NYLON, .06 THK. #4		
8				14	A 56321-005	WASHER, INTL LK, RGLR, SS #4		
9				14	A 31110-005	NUT, HEX, RGLR, SS, #4-40		
10				REF	D 13584	CONN, MOTHER PCB, SCHEMATIC		
C 11								

LTR	REVISION	APP'D	DATE	LTR	REVISION	APP'D	DATE
B	Release per ECO 3148	R. Plantel	9-23-83				
C	REV ECO-3216 CADOSE 12-12-83	R. Porter	12-22-83				
D	REV PER ECO 3651 CADOSE 9-19-84	[illegible]	9/20/84				

CS IV	D14623		
USED ON	N.H.A.	USED ON	N.H.A.

TITLE: CONN, MOTHER PCB ASS'Y

BOM D 13582 REV. D

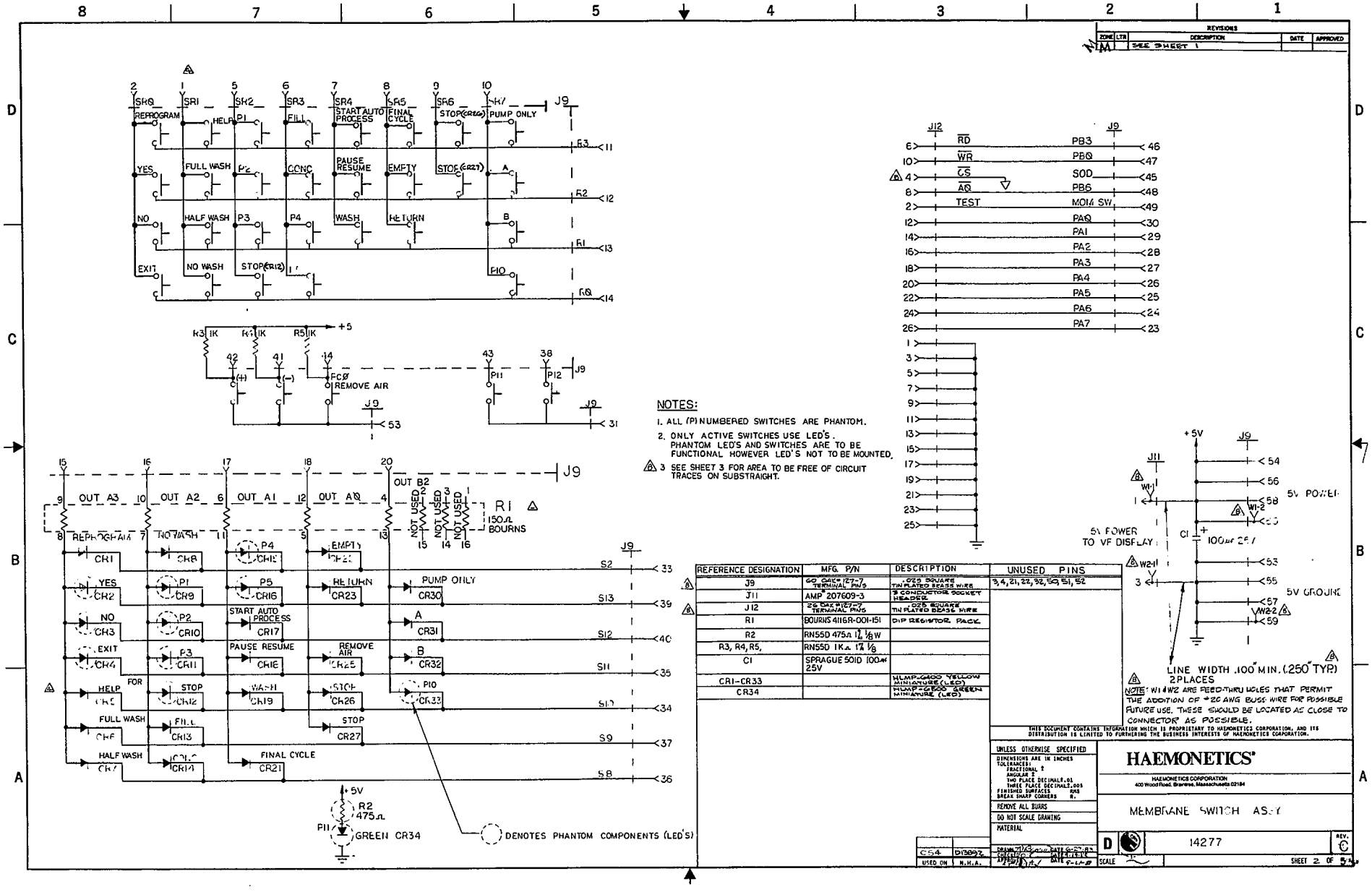

NOTES:

1. ALL (P) NUMBERED SWITCHES ARE PHANTOM.
2. ONLY ACTIVE SWITCHES USE LED'S. PHANTOM LED'S AND SWITCHES ARE TO BE FUNCTIONAL HOWEVER LED'S NOT TO BE MOUNTED.
3. SEE SHEET 3 FOR AREA TO BE FREE OF CIRCUIT TRACES ON SUBSTRAIGHT.

REFERENCE DESIGNATION	MFG. P/N	DESCRIPTION	UNUSED PINS
J9	60 OAK #127-7 TERMINAL PINS	.025 SQUARE TIN PLATED BRASS WIRE	3, 4, 21, 22, 32, 50, 51, 52
J11	AMP 207609-3	3 CONDUCTOR SOCKET HEADER	
J12	26 OAK #127-7 TERMINAL PINS	.025 SQUARE TIN PLATED BRASS WIRE	
R1	BOURNS 4116R-001-151	DIP RESISTOR PACK	
R2	RN55D 475Ω 1% 1/8W		
R3, R4, R5,	RN55D 1KΩ 1% 1/8		
C1	SPRAGUE 501D 100μf 25V		
CR1-CR33		HLMP-6400 YELLOW MINIATURE (LED)	
CR34		HLMP-6500 GREEN MINIATURE (LED)	

REVISIONS				
ZONE	LTR	DESCRIPTION	DATE	APPROVED
		SEE SHEET 1 FOR REV		

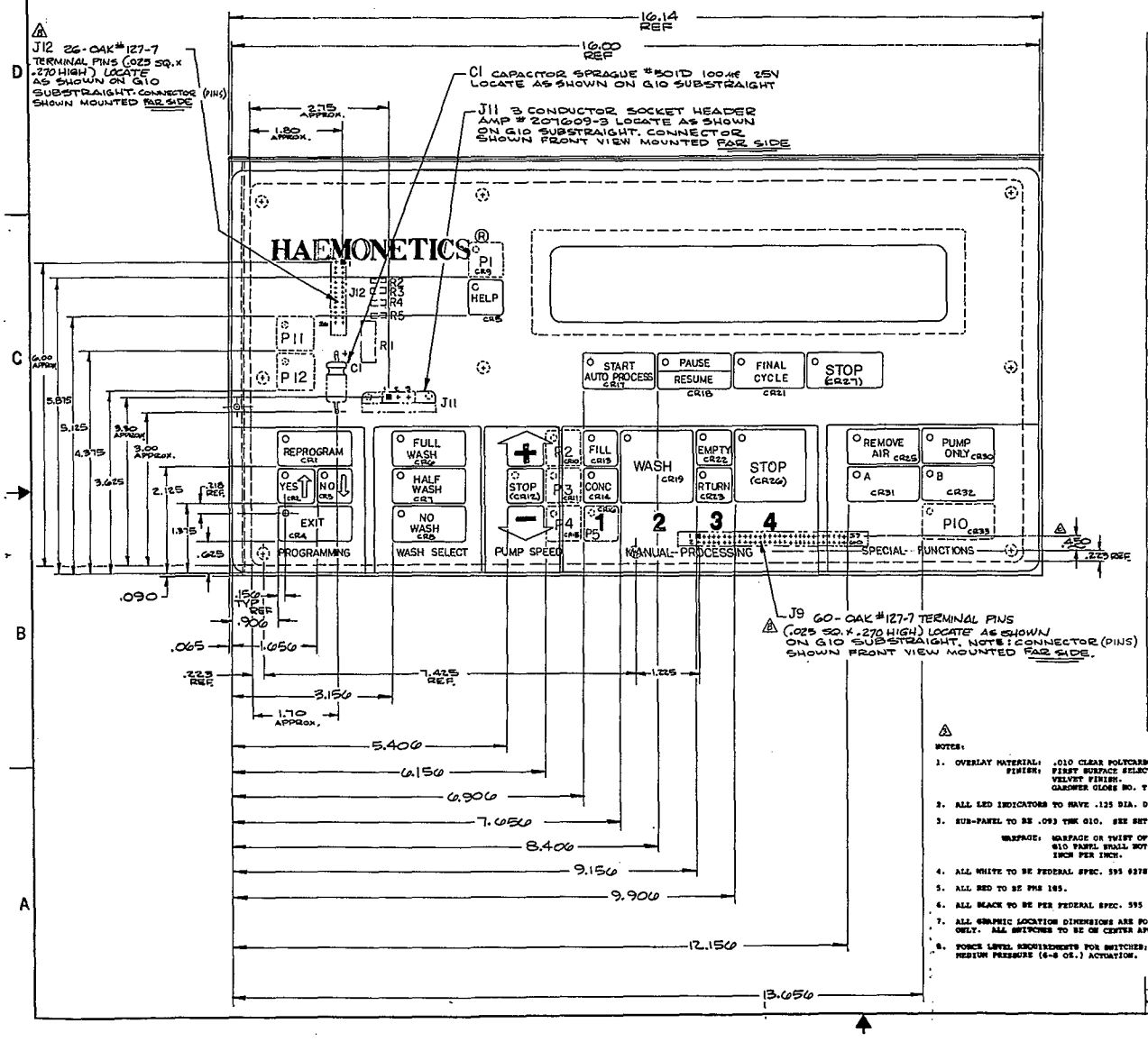

COLOR SCHEDULE

CHARACTERS TO BE BLACK ON (WHITE) BACKGROUND	HELP
CHARACTERS TO BE BLACK ON PMS279 (BLUE) BACKGROUND	START AUTO PROCESS; RESUME; CONC; FILL; FULL WASH
CHARACTERS TO BE BLACK ON PMS 278 (BLUE) BACKGROUND	HALF WASH; WASH; FINAL CYCLE; PAUSE
CHARACTERS TO BE BLACK ON PMS 277 (BLUE) BACKGROUND UNLESS OTHERWISE SPECIFIED	NO WASH; EMPTY; STOP; RTURN; PMS 279 (BLUE)
CHARACTERS TO BE BLACK ON PMS 429 (GRAY) BACKGROUND	REPROGRAM; PUMP ONLY; YES; REMOVE AIR; EXIT; NO; A; B; PMS 185 (RED)
CHARACTERS TO BE BLACK ON PMS 185 (RED) BACKGROUND	STOP
CHARACTERS TO BE PMS 185 (RED) ON WHITE BACKGROUND	STOP
CHARACTERS TO BE COLORED AS SHOWN	1 PMS 279 (BLUE); 2 PMS 278 (BLUE); 3 PMS 277 (BLUE); 4 WHITE

NOTES:

1. OVERLAY MATERIAL: .010 CLEAR POLYCARBONATE
   FINISH: FIRST SURFACE SELECTIVE VELVET FINISH. GARDNER GLOSS NO. T.B.D.
2. ALL LED INDICATORS TO HAVE .125 DIA. DIFFUSERS.
3. SUB-PANEL TO BE .093 THK G10. SEE SHT. 3.
   WARPAGE: WARPAGE OR TWIST OF SUBSTRAIGHT G10 PANEL SHALL NOT EXCEED .005 INCH PER INCH.
4. ALL WHITE TO BE FEDERAL SPEC. 595 #27875, OPAQUE.
5. ALL RED TO BE PMS 185.
6. ALL BLACK TO BE PER FEDERAL SPEC. 595 #27038.
7. ALL GRAPHIC LOCATION DIMENSIONS ARE FOR REFERENCE ONLY. ALL SWITCHES TO BE ON CENTER APPROX. AS SHOWN.
8. FORCE LEVEL REQUIREMENTS FOR SWITCHES: ALL SWITCHES - MEDIUM PRESSURE (6-8 OZ.) ACTUATION.

THIS DOCUMENT CONTAINS INFORMATION WHICH IS PROPRIETARY TO HAEMONETICS CORPORATION, AND ITS DISTRIBUTION IS LIMITED TO FURTHERING THE BUSINESS INTERESTS OF HAEMONETICS CORPORATION.

UNLESS OTHERWISE SPECIFIED
DIMENSIONS ARE IN INCHES
TOLERANCES:
FRACTIONAL ±
ANGULAR ±
TWO PLACE DECIMAL ±.01
THREE PLACE DECIMAL ±.005
FINISHED SURFACES RMS
BREAK SHARP CORNERS R.
REMOVE ALL BURRS
DO NOT SCALE DRAWING
MATERIAL —

CS-4 | DIBBZ
USED ON | N.H.A.

DRAWN SCHULTZ DATE 6-15-87
CHECKED DATE
APPROVED DATE 7-21-87

HAEMONETICS®
HAEMONETICS CORPORATION
400 Wood Road, Braintree, Massachusetts 02184

MEMBRANE SWITCH ASSY

D | 14277 | REV. C
SCALE FULL | SHEET 4 OF 5

ZONE	LTR	DESCRIPTION	DATE	APPROVED
	-	REL PER ECO-4024	6-3-83	R. Plaistad
M	A	REV PER ECO-4062	7-27-83	[illegible]
M	B	REV PER ECO-3186 CADOSE 11-15-83	11-17-83	[illegible]

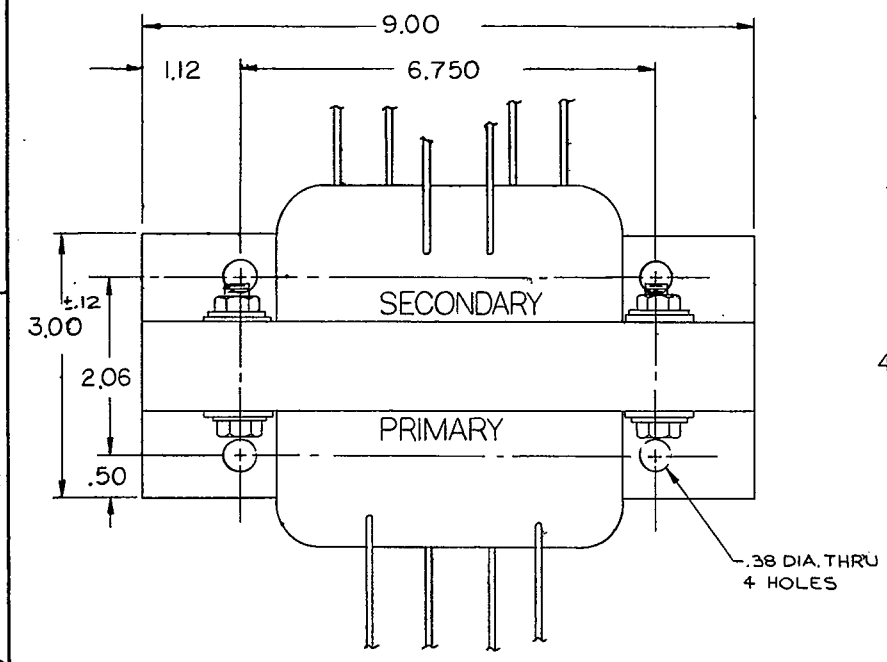

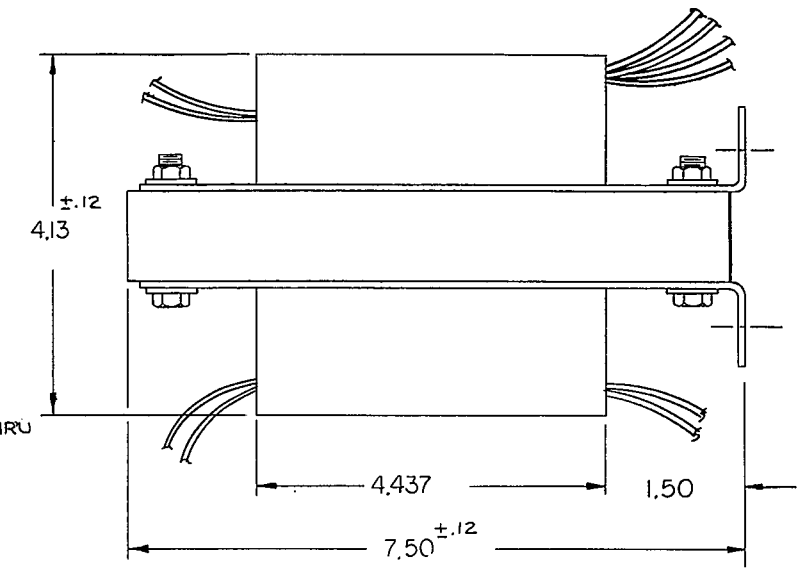

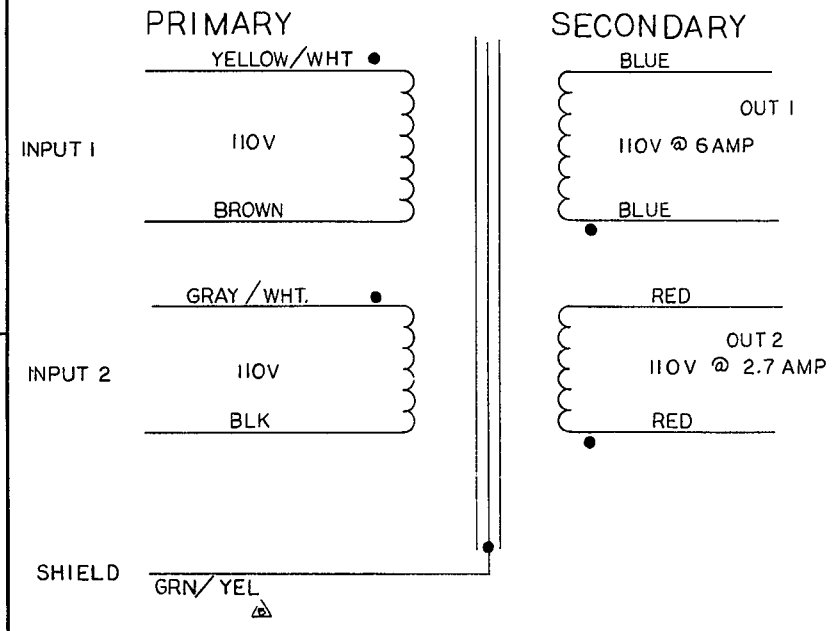

SUGGESTED SOURCE:
TECO CORPORATION
WINNISQUAM, N.H. 03289
P/N TECO #8224, 4000V ISOLATION, 30" WIRE LENGTH.

SPECIFICATIONS:
WILL MEET OR EXCEED, UL#544, CSA & VDE MEDICAL & DENTAL SPECIFICATIONS FOR POWER TRANSFORMERS.

DIMENSIONS ARE FOR REFERENCE ONLY

THIS DOCUMENT CONTAINS INFORMATION WHICH IS PROPRIETARY TO HAEMONETICS CORPORATION, AND ITS DISTRIBUTION IS LIMITED TO FURTHERING THE BUSINESS INTERESTS OF HAEMONETICS CORPORATION.

UNLESS OTHERWISE SPECIFIED
DIMENSIONS ARE IN INCHES
TOLERANCES:
FRACTIONAL ±
ANGULAR ±
TWO PLACE DECIMAL ±.01
THREE PLACE DECIMAL ±.005
FINISHED SURFACES RMS
BREAK SHARP CORNERS R.
REMOVE ALL BURRS
DO NOT SCALE DRAWING
MATERIAL —

DRAWN J. Brown DATE 5-26-83
CHECKED [illegible] DATE 6-3-83
APPROVED R. Plaistad DATE 6-3-83

CS-4
USED ON N.H.A.

HAEMONETICS®
HAEMONETICS CORPORATION
400 Wood Road, Braintree, Massachusetts 02184

TRANSFORMER

C 14253 REV.
SCALE — SHEET 1

Miller Blueprint Co

MAXIMUM POWER OUTPUT – 130 WATTS (A)

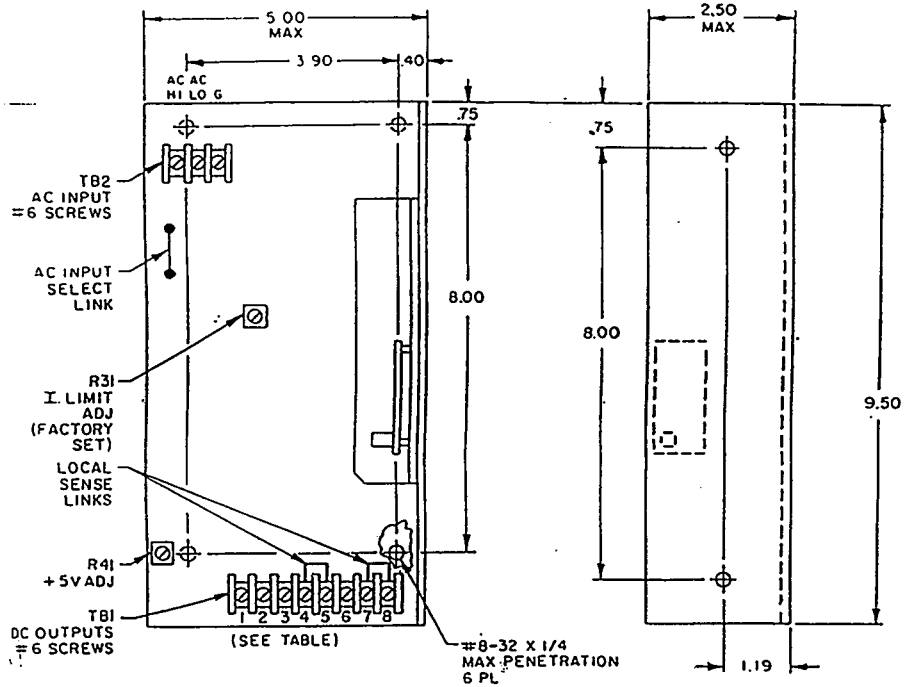

MANUFACTURER:
TODD PRODUCTS CORP.
BRENTWOOD, N.Y. 11717
(A) VENDOR MODEL Nº MOV-130-2415

SOURCE:
NORTHEAST REPRESENTATIVES INC.
HINGHAM, MA. 02043

OUTPUTS

TB1 – 1 –12VDC or –15VDC at 1A
– 2 +12VDC or +15VDC at 1.5A
– 3 +24VDC at 4Apk.,2A avg.
– 4 REMOTE SENSE COMMON
– 5 COMMON
– 6 COMMON
– 7 +5VDC REMOTE SENSE
TB1 – 8 + 5VDC at 15A

REVISIONS				
ZONE	LTR	DESCRIPTION	DATE	APPROVED
	–	REL PER ECO-3161	10-24-83	
	A	REV PER ECO 4390	10-3-85	

THIS DOCUMENT CONTAINS INFORMATION WHICH IS PROPRIETARY TO HAEMONETICS CORPORATION, AND ITS DISTRIBUTION IS LIMITED TO FURTHERING THE BUSINESS INTERESTS OF HAEMONETICS CORPORATION.

UNLESS OTHERWISE SPECIFIED
DIMENSIONS ARE IN INCHES
TOLERANCES:
FRACTIONAL ±
ANGULAR ±
TWO PLACE DECIMAL ±.01
THREE PLACE DECIMAL ±.005
FINISHED SURFACES RMS
BREAK SHARP CORNERS R.
REMOVE ALL BURRS
DO NOT SCALE DRAWING
MATERIAL —

DRAWN NOLETTE DATE 10-17-83
CHECKED DATE 10-24-83
APPROVED DATE 10-24-83

PCS	D14337
CS4	D14322
USED ON	N.H.A.

HAEMONETICS®
HAEMONETICS CORPORATION
400 Wood Road, Braintree, Massachusetts 02184

POWER SUPPLY

B | 14430 | REV. A

SCALE — | SHEET 1 OF 1

MODEL	Δ	□	◇	R10	R12	R15	R34	C12	C19	CR34	T2	L4
MOV-100/130-1212	+12V	+12V	-12V	150,3W,WW	150,1%	1.07K,1%	1.07K,1%	.005/1KV	4700/16V	4050015	1010313	1100296
MOV-100/130-2412	+24V	+12V	-12V	330,3W,WW	165,1%	1.07K,1%	1.07K,1%	.001/1KV	1500/50V	4054751	1010317	1100311
MOV-100/130-2415	+24V	+15V	-15V	330,3W,WW	165,1%	1.37K,1%	1.37K,1%	.001/1KV	1500/50V	4054751	1010315	1100311
MOV-100/130-1215	+12V	+15V	-15V	150,2W,WW	150,1%	1.37K,1%	1.37K,1%	.005/1KV	4700/16V	4050015	1010325	1100296

REVISIONS		
REV	DESCRIPTION	DATE
L	REVISED ECN 1768	2-12-86
M	" " 1833	2-11-87

REV STATUS OF SHT		ZONE	LTR	REVISIONS DESCRIPTION	DATE	APPROVED
SHT	REV					
				RELEASED	1-20-83	
	B			REVISED FOR RELEASE	7-19-83	
	C			" " ECN 1403	9-9-83	
	D			" " " 1414	9-21-83	
	E			" " " 1419	10-6-83	
	F			" " " 1482	1-31-84	
	G			" " " 1521	4-25-84	
	H			REVISED ECN 1532	10-23-84	
	J			REVISED ECN 1662	3-19-85	
	K			ADDED MOV-100/130-1215	1-22-86	

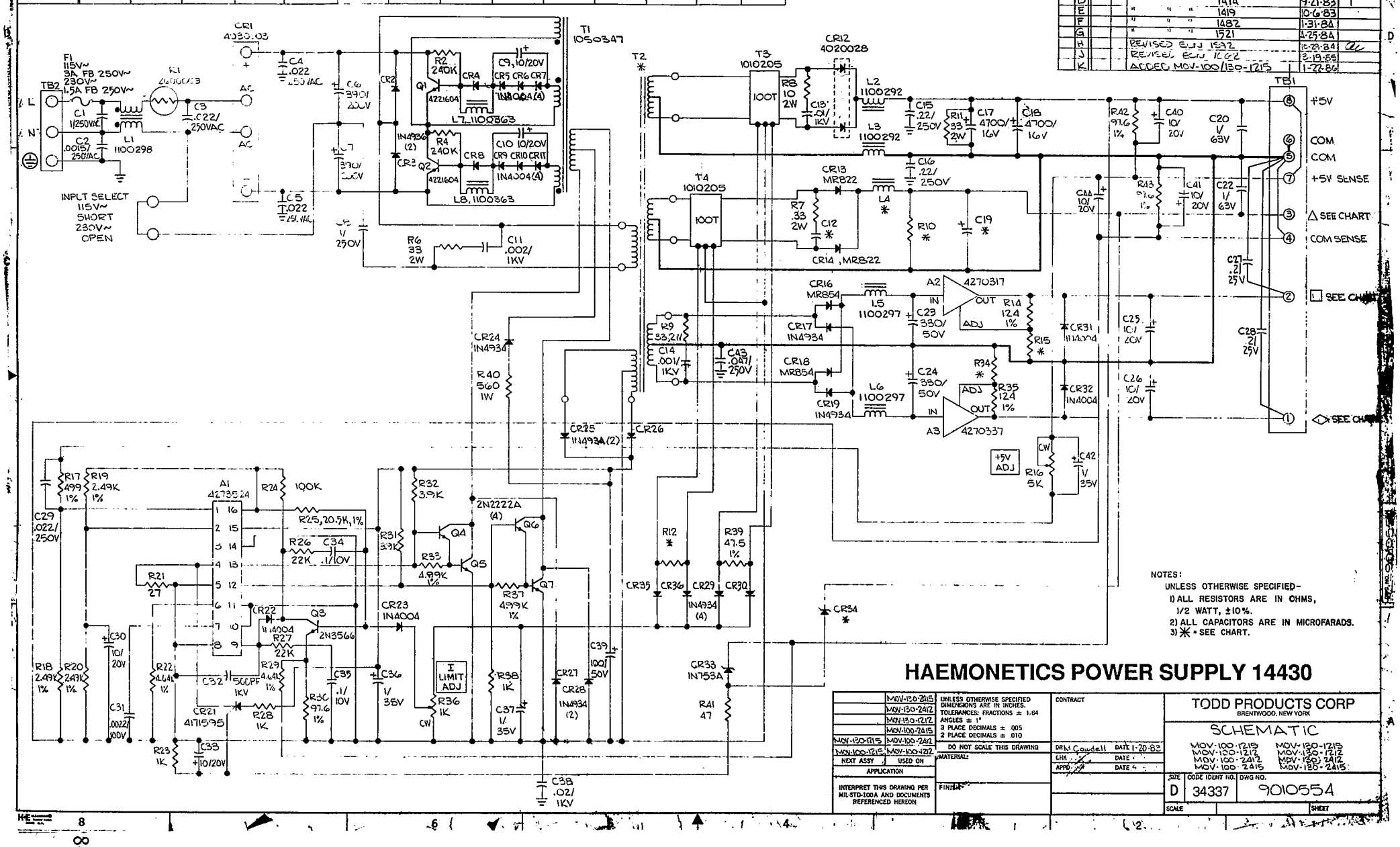

NOTES:
UNLESS OTHERWISE SPECIFIED–
1) ALL RESISTORS ARE IN OHMS, 1/2 WATT, ±10%.
2) ALL CAPACITORS ARE IN MICROFARADS.
3) ✳ = SEE CHART.

HAEMONETICS POWER SUPPLY 14430

	MOV-130-2415
	MOV-130-2412
	MOV-130-1212
	MOV-100-2415
MOV-120-1215	MOV-100-2412
MOV-100-1215	MOV-100-1212
NEXT ASSY	USED ON
APPLICATION	

INTERPRET THIS DRAWING PER MIL-STD-100A AND DOCUMENTS REFERENCED HEREON

UNLESS OTHERWISE SPECIFIED DIMENSIONS ARE IN INCHES. TOLERANCES: FRACTIONS ± 1/64 ANGLES ± 1° 3 PLACE DECIMALS ± .005 2 PLACE DECIMALS ± .010

DO NOT SCALE THIS DRAWING

MATERIAL:

FINISH:

CONTRACT

DRN Caudell DATE 1-20-83
CHK DATE
APPD DATE

TODD PRODUCTS CORP
BRENTWOOD, NEW YORK

SCHEMATIC

MOV-100-1215 MOV-130-1215
MOV-100-1212 MOV-130-1212
MOV-100-2412 MOV-130-2412
MOV-100-2415 MOV-130-2415

SIZE	CODE IDENT NO.	DWG NO.
D	34337	9010554

SCALE SHEET

REV STATUS OF SHT		REVISIONS				
SHT	REV	ZONE	LTR	DESCRIPTION	DATE	APPROVED
				RELEASED	7-15-83	
	B			REVISED ECN 1403	9-7-83	
	C			" " " 1474	12-21-83	
	D			" " " 1720	8-26-85	
	E			" " " 1833	2-10-87	

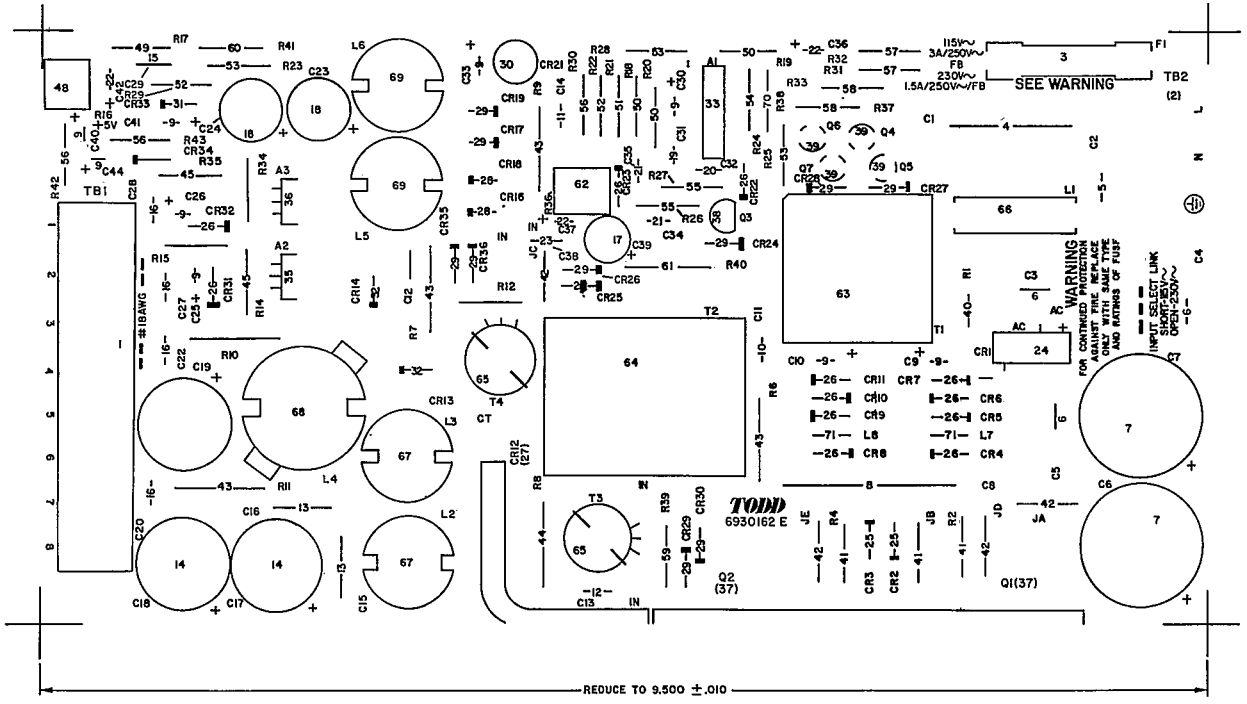

HAEMONETICS POWER SUPPLY 14430

		UNLESS OTHERWISE SPECIFIED DIMENSIONS ARE IN INCHES. TOLERANCES: FRACTIONS ± 1/64 ANGLES ± 1° 3 PLACE DECIMALS ± .005 2 PLACE DECIMALS ± .010	CONTRACT	TODD PRODUCTS CORP. BRENTWOOD NEW YORK
		DO NOT SCALE THIS DRAWING	DR RAN DATE 7-15-83	PC BD ARTWORK REF. MKG.
	MOV-100-1212	MATERIAL:	CHK DATE	
NEXT ASSY	USED ON		APPD DATE	
APPLICATION		FINISH		SIZE D / CODE IDENT NO. 34337 / DWG NO 6970533
INTERPRET THIS DRAWING PER MIL-STD-100A AND DOCUMENTS REFERENCED HEREON				SCALE NONE / SHEET

DWG NO 6970533